CITY OF PORTERVILLE

FOURTH ST COMMUNITY CENTER AND PARK

PORTERVILLE, CA

100% CONSTRUCTION DOCUMENTS

rrmdesign.com | (805) 543-1794
3765 SOUTH HIGUERA STREET, SUITE 102
SAN LUIS OBISPO, CA 93401

THE INCLUDED DRAWINGS, SPECIFICATIONS, IDEAS, DESIGNS AND ARRANGEMENTS REPRESENTED THEREBY ARE AND SHALL REMAIN THE PROPERTY OF RRM DESIGN GROUP AND NO PART THEREOF SHALL BE COPIED, DISCLOSED TO OTHERS OR USED IN CONNECTION WITH ANY WORK OR PROJECT OTHER THAN THE SPECIFIED PROJECT FOR WHICH THEY HAVE BEEN PREPARED AND DEVELOPED WITHOUT THE WRITTEN CONSENT OF RRM DESIGN GROUP. VISUAL CONTACT WITH THESE DRAWINGS OR SPECIFICATIONS SHALL CONSTITUTE CONCLUSIVE EVIDENCE OF ACCEPTANCE OF THESE RESTRICTIONS. SUBMITTAL OF THESE DOCUMENTS FOR PUBLIC AGENCY REVIEW SHALL NOT BE CONSIDERED A WAIVER OF RRM DESIGN GROUP'S RIGHTS.
RRM DESIGN GROUP COPYRIGHT 2024.
RRM IS A CALIFORNIA CORPORATION

LICENSED LANDSCAPE ARCHITECT
LANCE WIERSCHEM LIC. #6210
SIGNATURE
07.31.2026
EXPIRATION DATE
DATE
STATE OF CALIFORNIA

CONSULTANT

AGENCY

PROJECT DIRECTORY

OWNER
City of Porterville
291 N. Main Street — Phone: (559) 791-7843
Porterville, CA 93257
Sarah Weaver - sweaver@ci.porterville.ca.us

CIVIL ENGINEER & SURVEY
Lane Engineers, Inc.
979 North Blackstone Street — Phone: (559) 688-5263
Tulare, CA 93274
Wa Vang- wa@laneengineers.com

LANDSCAPE ARCHITECT
RRM Design Group
3765 South Higuera Street, Suite 102 — Phone: (805) 543-1794
San Luis Obispo, CA 93401
Lance Wierschem - ldwierschem@rrmdesign.com

PUMPTRACK
Wormhoudt Inc.
849 Almar Avenue, Suite 280 — Phone: (831) 426-8424
Santa Cruz, CA 95060
zach@skateparks.com

ARCHITECT
RRM Design Group
3765 South Higuera Street, Suite 102 — Phone: (805) 543-1794
San Luis Obispo, CA 93401
Tad Lupton - tslupton@rrmdesign.com

STRUCTURAL ENGINEER
Cornerstone Structural Engineering Group
986 W Alluvial Ave. — Phone: (559) 320-3200
Fresno, CA 93711
Dustin Lee - dlee@cseg.com

MECHANICAL ENGINEER
3C Engineering
1500 Palm Street — Phone: (805) 540-3363
San Luis Obispo, CA 93401
Ben Swanson - bswanson@3ceng.com

PLUMBING ENGINEER
3C Engineering
1500 Palm Street — Phone: (805) 540-3363
San Luis Obispo, CA 93401
Randy Carminati - rcarminati@3ceng.com

ELECTRICAL ENGINEER
Rose, Sing, Eastham & Associates
131 South Dunworth Street — Phone: (559) 733-2671
Visalia, CA 93292-6705
Steven Eastham - seatham@rse-eng.com

FIRE PROTECTION ENGINEERING
Collings & Associates
260 Maple Court — Phone: (805) 658-0003
241 Ventura, CA 93003
Al Yakel - ayakel@collingsandassociates.com

SCOPE OF WORK SUMMARY

THIS PROJECT GENERALLY INCLUDES, BUT IS NOT LIMITED TO THE IMPROVEMENTS OF APPROXIMATELY 6.6-ACRE SITE:

- DEMOLITION OF EXISTING CURB, GUTTER, AND ASPHALT ALONG HENDERSON AVE.
- CONSTRUCTION OF A COMMUNITY CENTER, PARKING LOT, MINI-PITCH SOCCER FIELD, SPLASH PAD, CHALLENGE COURSE, ROCK CLIMBING BOULDER, PUMPTRACK, FITNESS AREAS, SIDEWALKS,TRASH ENCLOSURE, PICNIC AREAS, SHADE STRUCTURES, PLAYGROUND, AND LANDSCAPING.
- ELECTRICAL UTILITIES, INCLUDING THE EXTENSION OF NEW SERVICE TO THE SITE FOR COMMUNITY CENTER, PEDESTRIAN AND PARKING LOT LIGHTING.
- SITE UTILITIES, INCLUDING STORM-DRAIN, SEWER AND WATER.
- STORMWATER MANAGEMENT UTILIZING BMPs INCLUDING BIORETENTION BASINS.
- NEW IRRIGATION SYSTEM UTILIZING RECYCLED WATER AND POTABLE WATER AT NEW POINTS OF CONNECTION.
- NEW TREE, SHRUB, AND TURF-GRASS PLANTING.

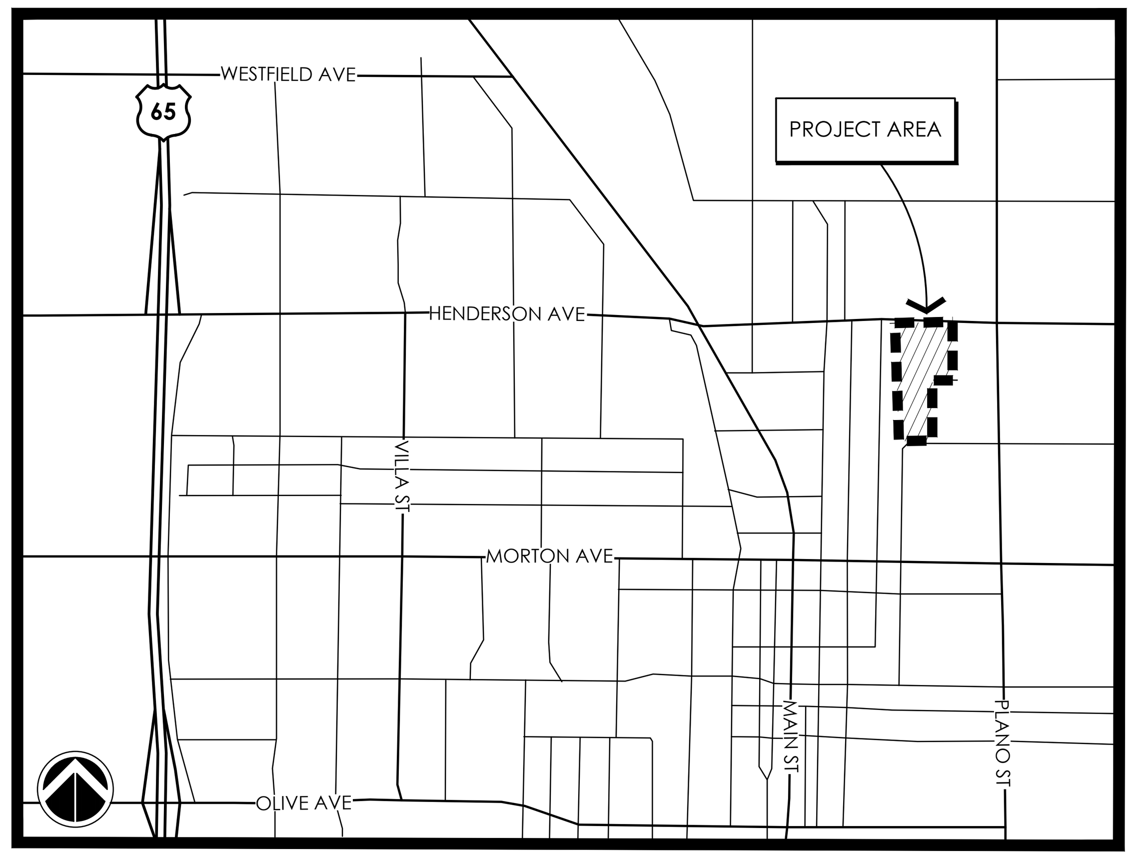

VICINITY MAP

NOT TO SCALE

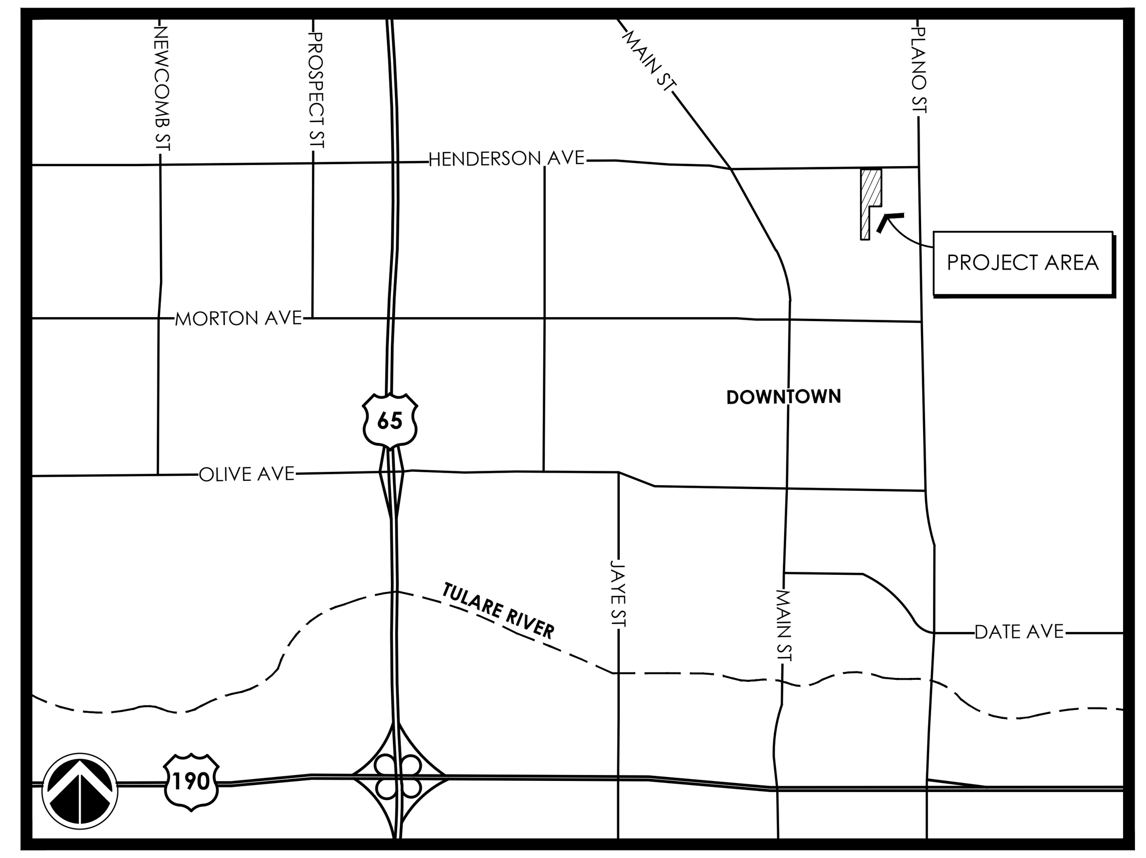

LOCATION MAP

NOT TO SCALE

BID ALTERNATES

ALT #	TITLE	DESCRIPTION	DETAIL
1	SHADE CANOPIES	SHADE CANOPIES FOR PLAY AREA, MINI PITCH, SPLASH PAD, CHALLENGE COURSE, PUMP TRACK.	LC105-LC108
2	PUMP TRACK	PUMP TRACK, INCL. STAGING AREA AND FURNISHINGS (PAVING, BENCHES, BIKE RACK, DRINKING FOUNTAIN, BIKE FIXIT, WASTE RECEPTACLE.	PT-1.0-PT-7.3/ LC107

SHEET INDEX

GENERAL

G001	TITLE SHEET
G002	GENERAL ABBREVIATIONS AND SHEET SCHEDULE
G003	GENERAL NOTES

CIVIL

C001	GENERAL NOTES AND INFORMATION
V101	TOPOGRAPHIC SURVEY
V102	TOPOGRAPHIC SURVEY
V103	TOPOGRAPHIC SURVEY
V104	TOPOGRAPHIC SURVEY
CD101	DEMOLITION PLAN
CH101	SITE DIMENSION & HORIZONTAL CONTROL PLAN
CH102	SITE DIMENSION & HORIZONTAL CONTROL PLAN
CH103	SITE DIMENSION & HORIZONTAL CONTROL PLAN
CG101	GRADING AND DRAINAGE PLAN
CG102	GRADING AND DRAINAGE PLAN
CG103	GRADING AND DRAINAGE PLAN
CG104	GRADING AND DRAINAGE PLAN
CU101	WET PIPING PLAN
CU102	WET PIPING PLAN
CU103	WET PIPING PLAN
CS101	SITE PAVING PLAN
CS102	SITE PAVING PLAN
CS103	SITE PAVING PLAN
CC101	HENDERSON AVENUE IMPROVEMENT PLAN
CC501	CIVIL DETAILS
CC502	CIVIL DETAILS
CC503	CIVIL DETAILS
CC504	CIVIL DETAILS
CC505	CITY STANDARD DETAILS
CC506	CITY STANDARD DETAILS
CC507	CITY STANDARD DETAILS
CC508	CITY STANDARD DETAILS

LANDSCAPE

LC001	CONSTRUCTION NOTES AND SCHEDULE
LC100	SITE REFERENCE PLAN AND KEY MAP
LC101-110	CONSTRUCTION PLANS
LC501	CONSTRUCTION DETAILS
LC502	CONSTRUCTION DETAILS
LC503	CONSTRUCTION DETAILS
LI001	IRRIGATION NOTES, SCHEDULE AND CALCULATIONS
LI101-110	IRRIGATION PLANS
LI501	IRRIGATION DETAILS
LI502	IRRIGATION DETAILS
LP001	PLANTING SCHEDULE AND NOTES
LP101-110	PLANTING PLAN
LP501	PLANTING DETAILS

PUMP TRACK

PT-1.0	PUMPTRACK GENERAL NOTES
PT-2.0	PUMPTRACK CONSTRUCTION PLAN
PT-3.0	PUMPTRACK LAYOUT PLAN
PT-4.0	PUMPTRACK GRADING AND DRAINAGE PLAN
PT-5.0	PUMPTRACK MATERIALS PLAN
PT-5.1	PUMPTRACK PAINTING PLAN
PT-6.0	PUMPTRACK STANDARD DETAILS
PT-7.0	PUMPTRACK DETAILS
PT-7.1	PUMPTRACK DETAILS
PT-7.2	PUMPTRACK DETAILS
PT-7.3	PUMPTRACK DETAILS

ARCHITECTURE

GA001	TITLE SHEET
GA101	GENERAL NOTES
GA102	GENERAL NOTES
GA203	CAL GREEN REQUIREMENTS
GA204	CAL GREEN REQUIREMENTS
GA205	CAL GREEN REQUIREMENTS
GA401	CODE ANALYSIS
T-241	ENERGY COMPLIANCE DOCUMENTATION
T-242	ENERGY COMPLIANCE DOCUMENTATION
T-243	ENERGY COMPLIANCE DOCUMENTATION
AS101	ARCHITECTURAL SITE PLAN
AS102	ENLARGED SITE PLANS
AS201	SITE DIMENSION & HORIZONTAL CONTROL PLAN
AS202	SITE DIMENSION & HORIZONTAL CONTROL PLAN
AS203	SITE DIMENSION & HORIZONTAL CONTROL PLAN
AS301	GRADING AND DRAINAGE PLAN
AS302	GRADING AND DRAINAGE PLAN
AS303	GRADING AND DRAINAGE PLAN
AS304	GRADING AND DRAINAGE PLAN
AS701	SITE DEVELOPMENT DETAILS
AS702	SITE DEVELOPMENT DETAILS
AS703	SITE DEVELOPMENT DETAILS
AS704	SITE DEVELOPMENT DETAILS
A101	GROUND FLOOR PLAN
A102	DIMENSIONED FLOOR PLAN
A111	REFLECTED CEILING PLAN
A121	ROOF PLAN
A201	EXTERIOR ELEVATIONS
A202	EXTERIOR ELEVATIONS
A301	BUILDING SECTIONS
A302	BUILDING SECTIONS
A303	BUILDING SECTIONS
A401	ENLARGED PLANS
A402	ENLARGED PLANS
A403	ENLARGED PLANS
A404	ENLARGED PLANS
A405	ENLARGED PLANS
A406	ENLARGED PLANS
A411	WALL SECTIONS
A412	WALL SECTIONS
A413	WALL SECTIONS
A414	WALL SECTIONS
A501	FINISH PLANS
A511	INTERIOR ELEVATIONS
A512	INTERIOR ELEVATIONS
A513	INTERIOR ELEVATIONS
A601	DOOR AND WINDOW SCHEDULES
A602	STOREFRONT SCHEDULES
A603	STOREFRONT SCHEDULES
A901	ARCHITECTURAL DETAILS - DOOR AND WINDOW
A902	ARCHITECTURAL DETAILS - FLASHING
A903	ARCHITECTURAL DETAILS - EXTERIOR
A904	ARCHITECTURAL DETAILS - EXTERIOR
A905	ARCHITECTURAL DETAILS - INTERIOR
A906	ARCHITECTURAL DETAILS - INTERIOR
A907	ARCHITECTURAL DETAILS - ROOF
A911	ARCHITECTURAL DETAILS - SITE
A921	ARCHITECTURAL DETAILS - WALL TYPES
A941	ACCESSIBILITY DETAILS - CLEARANCES
A942	ACCESSIBILITY DETAILS - SITE
A944	ACCESSIBILITY DETAILS - RESTROOMS

STRUCTURAL

S-001	MATERIAL DATA & PROJECT INFORMATION
S-002	TESTING & SPECIAL INSPECTION
S-101-S-111	TYPICAL DETAILS
S-201	FOUNDATION PLAN
S-202	FOUNDATION PLAN - SOUTH
S-203	FOUNDATION PLAN - NORTH
S-204	WALL STUD KEY PLAN
S-211	ROOF FRAMING PLAN
S-212	ROOF RAMING PLAN - SOUTH
S-213	ROOF FRAMING PLAN - NORTH
S-221	CEILING & LOW FRAMING PLAN
S-301	FOUNDATION DETAILS NO.1
S-401	ROOF FRAMING DETAILS NO. 1
S-402	ROOF FRAMING DETAILS NO. 2
S-403	ROOF FRAMING DETAILS NO. 3
S-501	WALL SECTIONS NO. 1
S-502	WALL SECTIONS NO. 2

MECHANICAL

M-000	MECHANICAL GENERAL
M-001	MECHANICAL SCHEDULES
M-002	MECHANICAL SCHEDULES
M-003	MECHANICAL DETAILS
M-004	MECHANICAL DETAILS
M-005	MECHANICAL DETAILS
M-200	MECHANICAL OVERALL FLOOR PLAN
M-201	MECHANICAL FLOOR PLAN - WEST ENLARGED
M-202	MECHANICAL FLOOR PLAN - EAST ENLARGED
M-300	MECHANICAL OVERALL ROOF PLAN

PLUMBING

P-000	PLUMBING GENERAL
P-001	PLUMBING SCHEDULES
P-002	PLUMBING DETAILS
P-003	PLUMBING DETAILS
P-200	PLUMBING FLOOR PLAN
P-201	PLUMBING FLOOR PLAN - ENLARGED
P-202	PLUMBING FLOOR PLAN - ENLARGED
P-300	PLUMBING ROOF PLAN

ELECTRICAL

EG101	ELECTRICAL CODES, NOTES, SYMBOLS, AND FIXTURE SCHEDULE
EG102	INDOOR LIGHTING COMPLIANCE
EG103	OUTDOOR LIGHTING COMPLIANCE
EG104	POWER COMPLIANCE
EG105	SOLAR AND BATTERY COMPLIANCE
ES101	OVERALL SITE ELECTRICAL PLAN
ES102	ENLARGED SITE ELECTRICAL PLAN
ES103	ENLARGED SITE ELECTRICAL PLAN
ES104	PHOTOMETRIC SITE LIGHTING PLAN
E101	OVERALL LIGHTING PLAN
E102	LIGHTING PLAN - POWER
E103	LIGHTING PLAN - CONTROLS
E201	OVERALL POWER PLAN
E202	ROOF ELECTRICAL PLAN
E301	FIRE ALARM INITIATION PLAN
E302	FIRE ALARM NOTIFICATION PLAN
E401	FIRE ALARM SPECIFICATIONS, CODES AND NOTES
E402	FIRE ALARM SYSTEM RISER DIAGRAM AND CALCULATIONS
E403	FIRE ALARM DETAILS
E501	ONE LINE DIAGRAM
E502	DETAILS
E503	DETAILS
E504	DETAILS
E505	SOLAR DETAILS AND NOTES
E506	DETAILS
E601	PANEL SCHEDULES
TG101	SIGNALS SYMBOLS, CODES, NOTES AND DETAILS
TS101	ENLARGED SITE SIGNALS PLAN
T101	OVERALL SIGNALS PLAN

FIRE PROTECTION

FP-0.0	SPRINKLER FIRE WATER SITE PLAN AND GENERAL NOTES
FP-1.0	PARTIAL SPRINKLER CEILING PLAN "A"
FP-1.1	PARTIAL SPRINKLER CEILING PLAN "B"
FP-2.0	PARTIAL SPRINKLER PIPING PLAN "A"
FP-2.1	PARTIAL SPRINKLER PIPING PLAN "B"
FP-3.0	BUILDING SECTIONS
FP-3.1	BUILDING SECTIONS
FP-4.0	DETAILS AND MANUFACTURER'S DATA SHET
FP-5.0	MANUFACTURER'S DATA SHEET
FP-6.0	SEISMIC BRACING CALCULATIONS

SPLASHPAD

A-001	SPRAY ZONE LAYOUT
A-002	SITE LAYOUT
A-003	ANCHOR PLAN
C-001	EMBED DETAILS
C-002	EMBED DETAILS
P-001	PLUMBING LAYOUT
P-002	PLUMBING LAYOUT
PD-001	PLUMBING DETAILS
PD-002	PLUMBING DETAILS
E-001	ELECTRICAL LAYOUT
ED-001	ELECTRICAL DETAILS
FT-001	FEATURE DRAWINGS

DIG ALERT
DIAL TOLL FREE
811
AT LEAST 2 DAYS BEFORE YOU DIG

APPROVALS

TITLE	NAME
TITLE	NAME
TITLE	NAME

PLAN CHECK REVISION 2

FOURTH ST COMMUNITY CENTER AND PARK
HENDERSON AVE., PORTERVILLE, CA 93257

TITLE SHEET

NO.	REVISION	DATE
△		
△		
△		
△		
△		
△		

PROJECT MANAGER: LW
DRAWN BY: DK
CHECKED BY: LM
DATE: 2024.09.19
PROJECT NUMBER: 2883-01-RC22
SHEET: G001

N:\2800\2883-01-RC22-Porterville-Fourth-St-Park-Design\Landscape-Architecture\Task-L2-ConDocs\Sheet-Files\G-2883-01-RC22.dwg, G001, Sep 24, 2024 10:39am, LDWierschem

SYMBOL LEGEND

SYMBOL	DESCRIPTION
LIMIT OF WORK	LIMIT OF WORK
PROPERTY LINE	PROPERTY LINE
ROW	RIGHT-OF-WAY
	BREAKLINE
℄	CENTERLINE
GB	GRADE BREAK
	SAWCUT LINE. JOIN EXISTING PAVING.
E	EXISTING TREE TO REMAIN

ABBREVIATIONS

&	AND
@	AT
℄	CENTERLINE
Ø	DIAMETER OR ROUND
#	POUND OR NUMBER
( )	EXISTING DATA
N	NORTH
S	SOUTH
W	WEST
E	EAST
NW	NORTHWEST
NE	NORTHEAST
SW	SOUTHWEST
SE	SOUTHEAST
AB	AGGREGATE BASE
AC	ASPHALT CONCRETE
ACP	ASBESTOS CEMENT PIPE
AD	AREA DRAIN
ADJ	ADJACENT
ALT	ALTERNATE
APPROX	APPROXIMATE
ARCH	ARCHITECT(URAL)
BC	BEGINNING OF CURVE
BCR	BEGINNING OF CURB RETURN
BLDG	BUILDING
BM	BENCH MARK
BO	BLOW OFF
BOT	BOTTOM
BR	TOP OF BRICK PAVERS
BW	BOTH WAYS
C	TOP OF CONCRETE
CB	CATCH BASIN
CF	CUBIC FOOT
CI	CAST IRON
CIP	CAST IRON PIPE
CIPC	CAST-IN-PLACE CONCRETE
CJ	CONTROL JOINT
CMU	CONCRETE MASONRY UNIT
CO	CLEAN OUT
COL	COLUMN
CONC	CONCRETE
CONST	CONSTRUCT/CONSTRUCTION
CONT	CONTINUOUS
CONTR	CONTRACTOR
COR	CORNER
CR	CROWN
CY	CUBIC YARD
D	DRAIN
DA	DRIVE APPROACH
DEM	DEMOLISH, DEMOLITION
DET	DETAIL
DF	DRINKING FOUNTAIN
DI	DRAIN OR DROP INLET
DIA	DIAMETER
DIAG	DIAGONAL
DIM	DIMENSION
DIP	DUCTILE IRON PIPE
DWG	DRAWING
EA	EACH
EC	END OF CURVE
ECR	END OF CURB RETURN
EJ	EXPANSION JOINT
ELEV	ELEVATION
ENCL	ENCLOSURE
EP	EDGE OF PAVEMENT
EQ	EQUAL
EQUIP	EQUIPMENT
ETW	EDGE OF TRAVEL WAY
EWF	ENGINEERED WOOD FIBER
EXIST	EXISTING
(E)	EXISTING
FAB	FABRICATION
FBO	FURNISHED BY OTHERS
FD	FOUND
FES	FLARED END SECTION
FF	FINISHED FLOOR ELEVATION
FG	FINISHED GRADE
FH	FIRE HYDRANT
FL	FLOW LINE
FNC	FENCE
FOC	FACE OF CONCRETE
FOF	FACE OF FINISH
FOM	FACE OF MASONRY
FOS	FACE OF STUDS
FTG	FOOTING
GA	GAUGE
GALV	GALVANIZED
GB	GRADE BREAK
GC	GRADE CHANGE
GR	TOP OF GRATE
GV	GATE VALVE
HORIZ	HORIZONTAL
HP	HINGE POINT
HPT	HIGH POINT
HW	HEADWALL
HWL	HIGH WATER LINE
HOR	HORIZONTAL
HT	HEIGHT
ID	INSIDE DIAMETER
INCL	INCLUDE(D), INCLUDING
INV	INVERT
JB	JUNCTION BOX
JT	JOINT
L	LENGTH
LB	LAG BOLT
LG	LIP OF GUTTER
LOC	LOCATION
LP	LOW POINT
LS	LAG SCREW
LT	LEFT
LGHT	LIGHT
MAS	MASONRY
MATL	MATERIAL
MAX	MAXIMUM
MECH	MECHANICAL
MED	MEDIUM
MET	METAL
MFGR	MANUFACTURER
MH	MAN HOLE
MIN	MINIMUM
MISC	MISCELLANEOUS
MTR	METER
NIC	NOT IN CONTRACT
NO	NUMBER
NOM	NOMINAL
NTS	NOT TO SCALE
OC	ON CENTER
OD	OUTSIDE DIAMETER
OG	ORIGINAL GROUND
P	TOP OF CONCRETE OR A.C.
PAVING	
P/A	PLANTER AREA
PAR	PARALLEL
PC	PROPERTY CORNER
PCC	POINT OF COMPOUND CURVATURE
PERF	PERFORATE (D)
PERP	PERPENDICULAR
PK	PARKING
P/L	PROPERTY LINE
POC	POINT OF CONNECTION
PROP	PROPOSED
PP	POWER POLE
PRC	POINT OF REVERSE CURVATURE
PRKG	PARKING
PROP	PROPERTY
PT	POINT
PTDF	PRESSURE TREATED DOUGLAS FIR
PTL	PRESSURE TREATED LUMBER
PUE	PUBLIC UTILITIES EASEMENT
PVC	POLYVINYL CHLORIDE
PVMT	PAVEMENT
R	RIDGE
RAD	RADIUS
RCP	REINFORCED CONCRETE PIPE
RDR	ROOF DRAIN
RDWD	REDWOOD
REBAR	REINFORCING BAR
REF	REFERENCE
REQD	REQUIRED
REM	REMOVE
REQ'D	REQUIRED
REV	REVISION
RP	RADIUS POINT
RR	RAILROAD
RT	RIGHT
R/W	RIGHT OF WAY
RWL	RAINWATER LEADER
SD	STORM DRAIN
SDMH	STORM DRAIN MANHOLE
SEC	SECTION
SERV	SERVICE
SF	SQUARE FOOT
SHT	SHEET
SIM	SIMILAR
SPEC	SPECIFICATION
SPECS	SPECIFICATIONS
SQ	SQUARE
SS	SANITARY SEWER
SSMH	SANITARY SEWER MANHOLE
SSDMH	SANITARY SEWER DROP MANHOLE
STA	STATION
STD	STANDARD
STL	STEEL
STRUCT	STRUCTURAL
SW	SWALE
SYM	SYMMETRICAL
T&B	TOP AND BOTTOM
TBM	TEMPORARY BENCH MARK
TC	TOP OF CURB
TD	TOP OF DIKE
TEL	TELEPHONE
TEMP	TEMPORARY
TER	TOP OF EAST RAIL
TF	TOP OF FOOTING
THK	THICK(NESS)
TM	TOP OF MOW STRIP
TOM	TOP OF MASONRY
TOS	TOP OF STEEL
TNR	TOP OF NORTH RAIL
TR	TOP OF RAIL
TSL	TOP OF SLAB
TSR	TOP OF SOUTH RAIL
TW	TOP OF WALL
TWR	TOP OF WEST RAIL
TYP	TYPICAL
UGD	UNDERGROUND
UNO	UNLESS NOTED OTHERWISE
VCP	VITRIFIED CLAY PIPE
VERT	VERTICAL
W/	WITH
W/O	WITHOUT
WD	WOOD
WM	WATER METER
WTR	WATER
WV	WATER VALVE

ABBREVIATIONS: WHEN USED IN THESE DRAWINGS SHALL CONFORM TO THE ABOVE LIST, UNLESS NOTED OTHERWISE. OTHER SECTIONS (SUCH AS CIVIL, ARCHITECTURAL, STRUCTURAL, MECHANICAL, PLUMBING AND ELECTRICAL PLANS) MAY CONTAIN SPECIFIC REFERENCES AND LEGENDS WITH INTERPRETATIONS INTENDED ONLY FOR THOSE SECTIONS.

KEY TO SHEET NUMBERING

DRAWING SHEET NUMBERING AND ORGANIZATION IS ADAPTED FROM THE UNITED STATES NATIONAL CAD STANDARD.

DISCIPLINE DESIGNATORS - LEVEL 1 (Partial List)

G	General
R	Resource (Existing Conditions)
H	Hazardous Materials
V	Survey/Mapping
B	Geotechnical
C	Civil
L	Landscape
S	Structural
A	Architectural
E	Electrical
Z	Contractor/Shop Drawings

DISCIPLINE DESIGNATORS - LEVEL 2 (Partial List)

D	Demolition
S	Site
G	Grading
E	Erosion Control
U	Utilities
C	Construction
I	Irrigation
P	Planting
L	Lighting
W	Stormwater
H	Horizontal Control

Dash is substituted when Level 2 is not included.

SHEET TYPES

0	General: Symbol legend, abbreviations, general notes.
1	Plans
2	Elevations
3	Sections
4	Large Scale Drawings: plans, elevations, sections (not details)
5	Details
6	Schedules and Diagrams
7	User Defined
8	User Defined
9	3D Drawings: isometric, perspective, photos

Discipline Designator — Sheet Type — Sequence Number

LC103

Level 1 — Level 2

Example
Sheet number at left (LC103) is LANDSCAPE CONSTRUCTION PLAN, THIRD SHEET.

rrm design group
rrmdesign.com | (805) 543-1794
3765 SOUTH HIGUERA STREET, SUITE 102
SAN LUIS OBISPO, CA 93401

THE INCLUDED DRAWINGS, SPECIFICATIONS, IDEAS, DESIGNS AND ARRANGEMENTS REPRESENTED THEREBY ARE AND SHALL REMAIN THE PROPERTY OF RRM DESIGN GROUP AND NO PART THEREOF SHALL BE COPIED, DISCLOSED TO OTHERS OR USED IN CONNECTION WITH ANY WORK OR PROJECT OTHER THAN THE SPECIFIED PROJECT FOR WHICH THEY HAVE BEEN PREPARED AND DEVELOPED WITHOUT THE WRITTEN CONSENT OF RRM DESIGN GROUP. VISUAL CONTACT WITH THESE DRAWINGS OR SPECIFICATIONS SHALL CONSTITUTE CONCLUSIVE EVIDENCE OF ACCEPTANCE OF THESE RESTRICTIONS. SUBMITTAL OF THESE DOCUMENTS FOR PUBLIC AGENCY REVIEW SHALL NOT BE CONSIDERED A WAIVER OF RRM DESIGN GROUP'S RIGHTS.
RRM DESIGN GROUP COPYRIGHT 2024.
RRM IS A CALIFORNIA CORPORATION

LICENSED LANDSCAPE ARCHITECT
LANCE WIERSCHEM LIC. #6210
SIGNATURE
07.31.2026
EXPIRATION DATE
STATE OF CALIFORNIA

CONSULTANT

AGENCY

FOURTH ST COMMUNITY CENTER AND PARK
HENDERSON AVE., PORTERVILLE, CA 93257

GENERAL ABBREVIATIONS AND SHEET SCHEDULE

NO.	REVISION	DATE

PLAN CHECK REVISION 2

PROJECT MANAGER	LW
DRAWN BY	DK
CHECKED BY	LW
DATE	2024.09.19
PROJECT NUMBER	2883-01-RC22
SHEET	G002

N:\2800\2883-01-RC22-Portterville-Fourth-St-Park-Design\Landscape-Architecture\Task-L2-ConDocs\Sheet-Files\G-2883-01-RC22.dwg, G002, Sep 24, 2024 10:39am, LDWierschem

GENERAL NOTES

1. THE CONTRACTOR SHALL BECOME FAMILIAR WITH THE PLANS AND SITE CONDITIONS PRIOR TO BEGINNING WORK. SHOULD CONFLICTING INFORMATION BE FOUND ON THE PLANS, THE CONTRACTOR SHALL NOTIFY AND RECEIVE DIRECTION FROM THE CITY BEFORE PROCEEDING WITH THE WORK IN QUESTION.
2. ONLY "APPROVED" STAMPED AND SIGNED DRAWINGS SHALL BE USED FOR THE CONSTRUCTION OF THIS PROJECT.
3. NO CHANGES OR MODIFICATIONS TO THE PLANS SHALL BE MADE WITHOUT THE PRIOR WRITTEN APPROVAL OF THE CITY.
4. ALL NUMERIC AND WRITTEN DIMENSIONS SHALL HAVE PRECEDENCE OVER ALL SCALE DIMENSIONS.
5. DETAILS AND NOTES ON THE DRAWINGS TAKE PRECEDENCE OVER TYPICAL DETAILS AND GENERAL NOTES. WRITTEN SPECIFICATIONS TAKE PRECEDENCE OVER DRAWINGS.
6. ALL CONSTRUCTION SHALL CONFORM TO THE APPROVED PLANS AND SPECIFICATIONS. IN THE ABSENCE OF A SPECIFIED STANDARD OR SPECIFICATION, WORK SHALL CONFORM TO THE CURRENT CITY OF PORTERVILLE STANDARDS. IF NONE EXISTS, STANDARD SPECIFICATIONS FOR PUBLIC WORKS CONSTRUCTION (GREENBOOK), SHALL APPLY.
7. CONTRACTOR SHALL USE PRECAUTION TO PREVENT DISRUPTION OF PROJECT SITE IN AREAS OUTSIDE CONSTRUCTION ZONE. DAMAGES SHALL BE REPLACED OR REPAIRED BY CONTRACTOR. CONTRACTOR SHALL SUBMIT VIDEO LOG OF CONSTRUCTION SITE THROUGHOUT DURATION OF PROJECT.
8. THE CONTRACTOR SHALL NOTIFY THE CITY AT LEAST 48 HOURS BEFORE COMMENCING WORK.
9. PROPOSED DEVIATIONS FROM THE PLANS MUST BE SUBMITTED TO THE CITY FOR REVIEW AND APPROVAL, INCLUDING FIELD REVISIONS REQUESTED BY THE CITY INSPECTOR.
10. ALL PROTECTIVE DEVICES TO BE INSTALLED BY THE CONTRACTOR, SHALL BE IN PLACE AT THE END OF EACH WORK DAY. A SAFE PEDESTRIAN PATH OF TRAVEL SHALL BE PROVIDED AT ALL TIMES TO AND FROM BUILDING ENTRANCES TO PARKING FACILITIES. COORDINATE PEDESTRIAN WALK CLOSURES WITH OWNER PRIOR TO CONSTRUCTION.
11. CONTRACTOR SHALL REFER TO MATERIALS SPECIFICATIONS THROUGHOUT THE APPROVED PLAN SET AND SPECIFICATIONS. ANY SUBSTITUTIONS OF THE MATERIALS SPECIFIED IN THESE DOCUMENTS SHALL REQUIRE WRITTEN APPROVAL FROM THE CITY.
12. DURING THE COURSE OF WORK, THE CONTRACTOR SHALL BE RESPONSIBLE FOR CALLING THE CITY OF PORTERVILLE FOR TESTING AND INSPECTION 48 HOURS IN ADVANCE. WORK NOT PROPERLY TESTED AND INSPECTED WILL BE SUBJECT TO REJECTION.
13. CONTRACTOR SHALL PROVIDE A LEGIBLE AND COMPLETE SET OF PLANS IDENTIFYING ALL MODIFICATIONS MADE DURING CONSTRUCTION TO THE CITY FOR THE PREPARATION OF RECORD DRAWINGS.
14. ALL CONSTRUCTION ACTIVITIES SHALL BE LIMITED TO MONDAY THROUGH FRIDAY OF THE CALENDAR WEEK. NO WEEKEND WORK SHALL BE PERMITTED WITHOUT THE PRIOR APPROVAL OF THE CITY.
15. CONTRACTOR SHALL CONFORM TO THE WORKING HOURS FROM 8AM - 5PM. NO WORK SHALL BE DONE DURING CITY HOLIDAYS, WEEKENDS, SPECIAL EVENTS OR OTHER PEAK SEASON TIMES PER THE CITY OF PORTERVILLE.
16. CONTRACTOR SHALL NOTIFY BUSINESSES OF WORK PRIOR TO COMMENCEMENT OF CONSTRUCTION. COORDINATE NOTIFICATION EFFORTS WITH CITY OF PORTERVILLE.
17. THIS PROJECT SHALL COMPLY WITH THE 2022 EDITIONS OF THE CALIFORNIA BUILDING CODE (CBC), CALIFORNIA MECHANICAL CODE (CMC), CALIFORNIA PLUMBING CODE (CPC), CALIFORNIA ELECTRICAL CODE (CEC), CALIFORNIA GREEN BUILDING STANDARDS CODE (CGBS), AND THE CALIFORNIA ENERGY CODE (CENC), ALL AMENDMENTS TO THE CA CODES ADOPTED BY THE CITY OF PORTERVILLE, AND ALL OTHER CODES, REGULATIONS, AND APPROVALS ESTABLISHED BY THE CITY OF PORTERVILLE.
18. PRIOR TO START OF CONSTRUCTION, THE CONTRACTOR SHALL SCHEDULE A PRE-CONSTRUCTION CONFERENCE WITH ALL PARTIES INVOLVED AT THE PROJECT SITE TO REVIEW THE SPECIAL INSPECTION REQUIREMENTS, PROCEDURES, AND INDIVIDUAL SPECIAL INSPECTORS THAT WILL BE ASSIGNED TO THE PROJECT, AS WELL AS REQUIREMENTS FOR STRUCTURAL OBSERVATION. CONTRACTOR SHALL CONTACT THE CITY OF PORTERVILLE BUILDING DIVISION TO CONFIRM AN ACCEPTABLE MEETING DATE AND TIME.
19. CONTRACTOR SHALL REFER TO CIVIL, LANDSCAPE, PUMP TRACK, ARCHITECTURAL, STRUCTURAL, ELECTRICAL, MECHANICAL, PLUMBING, FIRE PROTECTION, AND SPLASH PAD DRAWINGS FOR ADDITIONAL INFORMATION REGARDING SITE IMPROVEMENTS AND NOTES.

TREE PROTECTION NOTES

1. NO TREES SHALL BE REMOVED WITHOUT PRIOR APPROVAL OF THE CITY.
2. ALL EXISTING TREES IDENTIFIED TO REMAIN SHALL BE PRESERVED, PROTECTED, AND MAINTAINED.
3. CONSULT WITH THE CITY'S ARBORIST PRIOR TO PRUNING OR WORKING WITHIN THE DRIPLINE OF ANY TREE. ALL PRUNING OF TREES SHALL BE KEPT TO A MINIMUM AND MUST FOLLOW CITY OF PORTERVILLE STANDARDS.
4. PRIOR TO COMMENCEMENT OF CONSTRUCTION, TEMPORARY TREE PROTECTION FENCING SHALL BE PLACED AROUND THE EXISTING TREES IDENTIFIED TO REMAIN TO DELINEATE THE TREE PROTECTION ZONES.
5. NO STORAGE OF HEAVY EQUIPMENT, MATERIALS, OR CONSTRUCTION PARKING SHALL TAKE PLACE WITHIN THE TREE PROTECTION ZONE OF ANY EXISTING TREE IDENTIFIED TO REMAIN.
6. DEMOLITION AND / OR GRADING WITHIN THE TREE PROTECTION ZONE DRIPLINE OF EXISTING TREES IDENTIFIED TO REMAIN SHALL BE MINIMIZED AND SHALL BE DONE UNDER THE DIRECTION OR SUPERVISION OF THE CITY'S ARBORIST WITH LIGHT (ONE TON OR LESS) RUBBER-TIRED EQUIPMENT, OR BY HAND.
7. ALL ROOT OR CROWN PRUNING SHALL BE PERFORMED UNDER THE DIRECT SUPERVISION OF THE PROJECT ARBORIST. NOTIFY THE PROJECT ARBORIST AT LEAST 48 HOURS IN ADVANCE OF ANY ROOT OR CROWN PRUNING ACTIVITY TO COORDINATE A SITE VISIT.
8. TREE ROOT SYSTEMS IN PROPOSED BUILDING AREAS SHOULD BE REMOVED TO A MINIMUM DEPTH OF TWO (2) FEET AND WITHIN A RADIAL DISTANCE WHICH WOULD PERMIT REMOVAL OF ALL ROOTS LARGER THAN (1) INCH. BURNING IN AREAS WHICH ARE TO RECEIVE FILL MATERIAL SHALL NOT BE PERMITTED.
9. ANY TREE ROOTS ENCOUNTERED WITHIN THE TREE PROTECTION ZONE THAT ARE OVER 1" IN DIAMETER SHALL BE CLEANLY SEVERED WITH A HAND OR RECIPROCATING SAW PERPENDICULAR TO THE DIRECTION OF GROWTH TO MINIMIZE THE SURFACE AREA OF THE WOUND. ALL SEVERED ROOTS SHALL BE COVERED WITH SOIL IN THE FINAL GRADING CONDITION AND NO SEVERED ROOTS SHALL BE EXPOSED TO AIR AND SUNLIGHT FOR MORE THAN 48 HOURS.
10. PRIOR TO COMMENCEMENT OF CONSTRUCTION, CONTRACTOR SHALL OBTAIN TREE REMOVAL PERMIT AS REQUIRED.
11. TREE REMOVAL SHALL COMPLY WITH THE CITY OF PORTERVILLE STANDARDS.

PROJECT REPORTS

ALL WORK SHALL CONFIRM TO THE RECOMMENDATIONS AND MEASURES OUTLINED IN THE FOLLOWING PROJECT REPORTS:

- GEOTECHNICAL ENGINEERING REPORT FOR PROPOSED CONSTRUCTION AT FOURTH STREET COMMUNITY CENTER AND PARK BY SOILS ENGINEERING, INC. DATED JANUARY 13, 2023.

rrm design group
rrmdesign.com | (805) 543-1794
3765 SOUTH HIGUERA STREET, SUITE 102
SAN LUIS OBISPO, CA 93401

THE INCLUDED DRAWINGS, SPECIFICATIONS, IDEAS, DESIGNS AND ARRANGEMENTS REPRESENTED THEREBY ARE AND SHALL REMAIN THE PROPERTY OF RRM DESIGN GROUP AND NO PART THEREOF SHALL BE COPIED, DISCLOSED TO OTHERS OR USED IN CONNECTION WITH ANY WORK OR PROJECT OTHER THAN THE SPECIFIED PROJECT FOR WHICH THEY HAVE BEEN PREPARED AND DEVELOPED WITHOUT THE WRITTEN CONSENT OF RRM DESIGN GROUP. VISUAL CONTACT WITH THESE DRAWINGS OR SPECIFICATIONS SHALL CONSTITUTE CONCLUSIVE EVIDENCE OF ACCEPTANCE OF THESE RESTRICTIONS. SUBMITTAL OF THESE DOCUMENTS FOR PUBLIC AGENCY REVIEW SHALL NOT BE CONSIDERED A WAIVER OF RRM DESIGN GROUP'S RIGHTS.
RRM DESIGN GROUP COPYRIGHT 2024.
RRM IS A CALIFORNIA CORPORATION

LICENSED LANDSCAPE ARCHITECT
LANCE WIERSCHEM LIC. 4820
SIGNATURE
07.31.2026
EXPIRATION DATE
DATE
STATE OF CALIFORNIA

CONSULTANT

AGENCY

FOURTH ST COMMUNITY CENTER AND PARK
HENDERSON AVE., PORTERVILLE, CA 93257

GENERAL NOTES

NO.	REVISION	DATE
△		
△		
△		
△		
△		
△		

PROJECT MANAGER LW
DRAWN BY DK
CHECKED BY LW
DATE 2024.09.19
PROJECT NUMBER 2883-01-RC22
SHEET G003

PLAN CHECK REVISION 2

N:\2800\2883-01-RC22-Portenville-Fourth-St-Park-Design\Landscape-Architecture\Task-L2-ConDocs\Sheet-Files\G-2883-01-RC22.dwg, G003, Sep 24, 2024 10:39am, LDWierschem

CONSTRUCTION STAKING

CONSTRUCTION STAKING LIABILITY WAIVER

THESE IMPROVEMENT PLANS HAVE BEEN PREPARED WITH THE INTENT THAT THE FIRM OF LANE ENGINEERS, INC. WILL BE PERFORMING THE CONSTRUCTION STAKING FOR THE COMPLETE PROJECT. IF ANYONE OTHER THAN THE DESIGN ENGINEER IS EMPLOYED TO USE THESE PLANS FOR THE PURPOSE OF CONSTRUCTION STAKING, NOTICE IS HEREBY GIVEN THAT LANE ENGINEERS, INC. WILL NOT ASSUME ANY RESPONSIBILITY FOR ERRORS OR OMISSIONS, IF ANY, WHICH MIGHT OCCUR AND COULD HAVE BEEN AVOIDED, CORRECTED, OR MITIGATED IF THE FIRM OF LANE ENGINEERS, INC. HAD PERFORMED THE CONSTRUCTION STAKING WORK.

BENCHMARKS

BENCHMARKS:

CITY BENCHMARK NO. 42: DISK IN WELL AT CENTER SEC. 25-21-27, INTERSECTION PLANO ST. AND MORTON AVE.

ELEV = 469.056 (NAVD 1988).

TBM NO. 1: CHISELED PLUS IN TOP OF CURB, SOUTH RETURN, SOUTHEAST CORNER OF HENDERSON AVE. AND FOURTH ST.

ELEV = 450.93 (NAVD 1988).

TBM NO. 2: CHISELED PLUS IN NORTHWEST CORNER OF CONCRETE PAD FOR MOST SOUTHERLY BENCH, EAST SIDE OF PEDESTRIAN PATH.

ELEV = 450.11 (NAVD 1988).

VERTICAL DATUM NOTE:

1. ADD 400.00 FEET TO ELEVATIONS SHOWN ON PLAN TO OBTAIN DATUM BASED ON NORTH AMERICAN VERTICAL DATUM 1988 (NAVD 1988).

CIVIL INDEX SHEETS

Civil Sheet List Table

Sheet Number	Sheet Title
C001	GENERAL NOTES & INFORMATION
V-101	TOPOGRAPHIC SURVEY
V-102	TOPOGRAPHIC SURVEY
V-103	TOPOGRAPHIC SURVEY
V-104	TOPOGRAPHIC SURVEY
CD101	DEMOLITION PLAN
CH101	SITE DIMENSION & HORIZONTAL CONTROL PLAN
CH102	SITE DIMENSION & HORIZONTAL CONTROL PLAN
CH103	SITE DIMENSION & HORIZONTAL CONTROL PLAN
CG101	GRADING AND DRAINAGE PLAN
CG102	GRADING AND DRAINAGE PLAN
CG103	GRADING AND DRAINAGE PLAN
CG104	GRADING AND DRAINAGE PLAN
CU101	WET PIPING PLAN
CU102	WET PIPING PLAN
CU103	WET PIPING PLAN
CS101	SITE PAVING PLAN
CS102	SITE PAVING PLAN
CS103	SITE PAVING PLAN
CC101	HENDERSON AVENUE IMPROVEMENT PLAN
CC501	CIVIL DETAILS
CC502	CIVIL DETAILS
CC503	CIVIL DETAILS
CC504	CIVIL DETAILS
CC505	CITY STANDARD DETAILS
CC506	CITY STANDARD DETAILS
CC507	CITY STANDARD DETAILS
CC508	CITY STANDARD DETAILS

PROJECT INFORMATION

FOURTH ST. COMMUNITY CENTER AND PARK

FOR:

CITY OF PORTERVILLE

PROJECT LOCATION: SOUTHEAST CORNER OF HENDERSON AVENUE AND NORTH 4TH STREET

PORTERVILLE, CA

rrm design group
rrmdesign.com | (805) 543-1794
3765 SOUTH HIGUERA STREET, SUITE 102
SAN LUIS OBISPO, CA 93401

THE INCLUDED DRAWINGS, SPECIFICATIONS, IDEAS, DESIGNS AND ARRANGEMENTS REPRESENTED THEREBY ARE AND SHALL REMAIN THE PROPERTY OF RRM DESIGN GROUP AND NO PART THEREOF SHALL BE COPIED, DISCLOSED TO OTHERS OR USED IN CONNECTION WITH ANY WORK OR PROJECT OTHER THAN THE SPECIFIED PROJECT FOR WHICH THEY HAVE BEEN PREPARED AND DEVELOPED WITHOUT THE WRITTEN CONSENT OF RRM DESIGN GROUP. VISUAL CONTACT WITH THESE DRAWINGS OR SPECIFICATIONS SHALL CONSTITUTE CONCLUSIVE EVIDENCE OF ACCEPTANCE OF THESE RESTRICTIONS. SUBMITTAL OF THESE DOCUMENTS FOR PUBLIC AGENCY REVIEW SHALL NOT BE CONSIDERED A WAIVER OF RRM DESIGN GROUP'S RIGHTS.
RRM DESIGN GROUP COPYRIGHT 2023.
RRM IS A CALIFORNIA CORPORATION

REGISTERED PROFESSIONAL ENGINEER
WA VANG
R.C.E. 86967
08/30/2024
CIVIL
STATE OF CALIFORNIA

CONSULTANT

LANE ENGINEERS INC.
CIVIL • STRUCTURAL • SURVEYING
979 N. BLACKSTONE STREET
TULARE, CALIFORNIA 93274
(559) 688-5263
www.laneengineers.com

AGENCY

NOTES

STANDARD GENERAL NOTES

1. THE CONTRACTOR AGREES THAT, IN ACCORDANCE WITH GENERALLY ACCEPTED CONSTRUCTION PRACTICES, THE CONTRACTOR WILL BE REQUIRED TO ASSUME SOLE AND COMPLETE RESPONSIBILITY FOR JOB SITE CONDITIONS DURING THE COURSE OF CONSTRUCTION OF THE PROJECT, INCLUDING SAFETY OF ALL PERSONS AND PROPERTY. THIS REQUIREMENT SHALL BE MADE TO APPLY CONTINUOUSLY AND NOT BE LIMITED TO NORMAL WORKING HOURS. THE CONTRACTOR FURTHER AGREES TO DEFEND, INDEMNIFY AND HOLD OWNER AND ENGINEER HARMLESS FROM ANY AND ALL LIABILITY, REAL OR ALLEGED, IN CONNECTION WITH THE PERFORMANCE OF WORK ON THIS PROJECT, EXEMPTING LIABILITY ARISING FROM THE SOLE NEGLIGENCE OF ENGINEER.
2. THE CONTRACTOR SHALL ACCEPT THE SITE IN ITS PRESENT CONDITION AND DEMOLISH AND/OR REMOVE FROM THE AREA OF DESIGNATED PROJECT EARTHWORK ALL STRUCTURES, BOTH SURFACE AND SUBSURFACE, TREES, BRUSH, ROOTS, DEBRIS, ORGANIC MATTER, AND ALL OTHER MATTER DETERMINED BY THE INSPECTOR TO BE DELETERIOUS. SUCH MATERIAL SHALL BE REMOVED FROM THE SITE BY THE CONTRACTOR.
3. EXCAVATIONS SHALL BE ADEQUATELY SHORED, BRACED AND SHEETED SO THAT THE EARTH WILL NOT SLIDE OR SETTLE AND SO THAT ALL EXISTING IMPROVEMENTS OF ANY KIND WILL BE FULLY PROTECTED FROM DAMAGE. ANY DAMAGE RESULTING FROM A LACK OF ADEQUATE SHORING, BRACING AND SHEETING, SHALL BE THE RESPONSIBILITY OF THE CONTRACTOR AND HE SHALL EFFECT NECESSARY REPAIRS OR RECONSTRUCTION AT HIS OWN EXPENSE. WHERE THE EXCAVATION FOR A CONDUIT TRENCH, AND/OR STRUCTURE IS FIVE FEET OR MORE IN DEPTH, THE CONTRACTOR SHALL PROVIDE ADEQUATE SHEETING, WHICH SHALL CONFORM TO THE APPLICABLE CONSTRUCTION SAFETY ORDERS OF THE DIVISION OF INDUSTRIAL SAFETY OF THE STATE OF CALIFORNIA. THE CONTRACTOR SHALL ALWAYS COMPLY WITH OSHA REQUIREMENTS.
4. IT IS THE RESPONSIBILITY OF THE CONTRACTOR TO OBTAIN PERMITS NECESSARY TO PERFORM THE WORK SHOWN IN THESE PLANS FROM THE APPROPRIATE AGENCIES.
5. THE CONTRACTOR SHALL TAKE EFFECTIVE ACTION TO PREVENT THE FORMATION OF AN AIRBORNE DUST NUISANCE AND SHALL BE RESPONSIBLE FOR ANY DAMAGE RESULTING FROM HIS FAILURE TO DO SO.
6. THE CONTRACTOR SHALL PROVIDE FOR INGRESS AND EGRESS FOR PRIVATE PROPERTY ADJACENT TO WORK THROUGHOUT THE PERIOD OF CONSTRUCTION.
7. THE CONTRACTOR SHALL PROVIDE ALL LIGHTS, SIGNS, BARRICADES, FLAGMEN OR OTHER DEVICES NECESSARY TO PROVIDE FOR SAFETY. TRAFFIC CONTROL AND ALL TRAFFIC CONTROL DEVICES SHALL BE IN CONFORMANCE WITH THE "MANUAL OF TRAFFIC CONTROLS FOR CONSTRUCTION AND MAINTENANCE ZONES", LATEST EDITION AS PUBLISHED BY THE STATE OF CALIFORNIA, DEPARTMENT OF TRANSPORTATION.
8. THE CONTRACTOR SHALL POST EMERGENCY TELEPHONE NUMBERS FOR POLICE, FIRE, AMBULANCE, AND THOSE AGENCIES RESPONSIBLE FOR MAINTENANCE OF UTILITIES IN THE VICINITY OF JOBSITE.
9. ALL RETURN RADII AND CURB DATA ARE TO FACE OF CURB UNLESS SHOWN OR NOTED OTHERWISE.
10. ALL QUANTITIES AND PAY ITEMS ARE AND WILL BE BASED ON HORIZONTAL MEASUREMENTS.
11. LENGTHS OF SANITARY SEWERS AND STORM DRAINS ARE HORIZONTAL DISTANCES FROM CENTER TO CENTER OF STRUCTURES, ROUNDED OFF TO THE NEAREST FOOT.
12. EXISTING UNDERGROUND UTILITIES AND IMPROVEMENTS ARE SHOWN IN THEIR APPROXIMATE LOCATION BASED UPON RECORD INFORMATION AVAILABLE TO THE ENGINEER AT THE TIME OF PREPARATION OF THESE PLANS. LOCATIONS MAY NOT HAVE BEEN VERIFIED IN THE FIELD AND NO GUARANTEE IS MADE AS TO THE ACCURACY OR COMPLETENESS OF THE INFORMATION SHOWN. THE CONTRACTOR SHALL NOTIFY UTILITY COMPANIES AT LEAST 2 WORKING DAYS IN ADVANCE OF CONSTRUCTION TO FIELD LOCATE UTILITIES. CALL UNDERGROUND SERVICE ALERT (U.S.A.), AT 1-800-227-2600. IT SHALL BE THE RESPONSIBILITY OF THE CONTRACTOR TO DETERMINE THE EXISTENCE AND LOCATION OF THOSE UTILITIES SHOWN ON THESE PLANS OR INDICATED IN THE FIELD BY LOCATING SERVICES. ANY ADDITIONAL COSTS INCURRED AS A RESULT OF CONTRACTOR'S FAILURE TO VERIFY LOCATIONS OF EXISTING UTILITIES PRIOR TO BEGINNING OF CONSTRUCTION IN THEIR VICINITY SHALL BE BORNE BY THE CONTRACTOR AND ASSUMED INCLUDED AND MERGED IN THE CONTRACT UNIT PRICE.
13. ALL EXISTING UTILITIES AND IMPROVEMENTS THAT BECOME DAMAGED DURING CONSTRUCTION SHALL BE COMPLETELY RESTORED TO THE SATISFACTION OF THE LOCAL AGENCY ENGINEER, AT THE CONTRACTOR'S SOLE EXPENSE.
14. ANY RELOCATION OF PUBLIC UTILITIES SHALL BE CONDUCTED IN ACCORDANCE WITH ANY AND ALL REQUIREMENTS OF THE UTILITY COMPANY, INCLUDING FEES, BONDS, PERMITS AND WORKING CONDITIONS, ETC. THIS WORK SHALL BE DONE AT NO EXPENSE TO THE UTILITY COMPANY. THE OWNER AND/OR CONTRACTOR SHALL PAY THE COST OF ALL SUCH RELOCATION WORK INCLUDING FEES, BONDS, PERMITS, ETC.
15. IF ARCHAEOLOGICAL MATERIALS ARE UNCOVERED DURING GRADING, TRENCHING OR OTHER EXCAVATION, EARTHWORK WITHIN 100 FEET OF THESE MATERIALS SHALL BE STOPPED UNTIL A PROFESSIONAL ARCHAEOLOGIST WHO IS CERTIFIED BY THE SOCIETY OF CALIFORNIA ARCHAEOLOGY (SCA) AND/OR THE SOCIETY OF PROFESSIONAL ARCHAEOLOGY (SOPA) HAS HAD AN OPPORTUNITY TO EVALUATE THE SIGNIFICANCE OF THE FIND AND SUGGEST APPROPRIATE MITIGATION MEASURES, IF THEY ARE DEEMED NECESSARY.
16. LANE ENGINEERS, INC. DOES NOT SPECIFY NOR RECOMMEND THE USE OR INSTALLATION OF ANY MATERIAL OR EQUIPMENT WHICH IS MADE FROM, OR WHICH CONTAINS ASBESTOS FOR USE IN THE CONSTRUCTION OF THESE IMPROVEMENTS. ANY PARTY INSTALLING OR USING SUCH MATERIALS OR EQUIPMENT SHALL BE SOLELY RESPONSIBLE FOR ALL INJURIES, DAMAGES, OR LIABILITIES, OF ANY KIND, CAUSED BY THE USE OF SUCH MATERIALS OR EQUIPMENT. THE PROVISIONS OF THIS NOTE SHALL APPLY UNLESS THEY ARE EXPRESSLY WAIVED IN WRITING BY LANE ENGINEERS, INC.
17. SHOULD IT APPEAR THAT THE WORK TO BE DONE OR ANY MATTER RELATIVE THERETO IS NOT SUFFICIENTLY DETAILED OR EXPLAINED ON THESE PLANS, THE CONTRACTOR SHALL CONTACT PROJECT ARCHITECT.
18. THE CONTRACTOR SHALL MEET AND FOLLOW ALL NPDES REQUIREMENTS IN EFFECT AT THE TIME OF CONSTRUCTION.
19. CONTRACTOR SHALL COMPLY WITH SAN JOAQUIN VALLEY AIR POLLUTION CONTROL DISTRICT (SJVAPCD) REGULATION VIII TO LIMIT FUGITIVE DUST. A DUST CONTROL PLAN IS REQUIRED TO BE SUBMITTED AND APPROVED BY THE SJVAPCD PRIOR TO COMMENCING EARTH MOVING ACTIVTIES.
20. APPROPRIATE APPROVAL SHALL BE OBTAINED PRIOR TO PROCEEDING WITH ANY WORK IN THE VICINITY OF IRRIGATION DITCHES, CREEKS AND ASSOCIATED IRRIGATION FACILITIES WHETHER OR NOT SHOWN ON THESE PLANS.

PROJECT SPECIFIC NOTES

1. THE CONTRACTOR SHALL BE RESPONSIBLE FOR THE PROTECTION OF ALL EXISTING SURVEY MONUMENTS AND OTHER SURVEY MARKERS DURING CONSTRUCTION. ALL SUCH MONUMENTS OR MARKERS DESTROYED DURING CONSTRUCTION SHALL BE REPLACED AT THE CONTRACTORS EXPENSE.
2. ALL WORK WITHIN CITY OF PORTERVILLE STREET RIGHTS-OF-WAY SHALL BE DONE IN ACCORDANCE WITH CITY OF PORTERVILLE STANDARD PLANS AND SPECIFICATIONS.
3. THE CONTRACTOR SHALL PROCURE FROM CITY OF PORTERVILLE AND ALL OTHER APPLICABLE AGENCIES, ALL PERMITS AND LICENSES, PAY ALL CHARGES AND FEES AND GIVE ALL NOTICES NECESSARY (2 WORKING DAYS MINIMUM) FOR INSTALLATION OF APPLICABLE IMPROVEMENTS DELINEATED HEREON.
4. THE CONTRACTOR SHALL NOTIFY THE CONSTRUCTION SURVEYOR THREE WORKING DAYS PRIOR TO THE NEED FOR CONSTRUCTION SURVEY STAKES.
5. THE CONTRACTOR SHALL BE HELD RESPONSIBLE FOR ANY FIELD CHANGES MADE WITHOUT WRITTEN AUTHORIZATION FROM THE OWNER.
6. ALL TRENCHES WITHIN THE CITY STREET RIGHT OF WAY SHALL CONFORM TO THE STANDARD PLANS AND SPECIFICATIONS OF THE CITY OF PORTERVILLE. ALL BACKFILL IN TRENCHES OUTSIDE OF PAVED AREAS ON-SITE SHALL BE COMPACTED TO A MINIMUM OF 90 PERCENT RELATIVE COMPACTION. FOR PLASTIC PIPE INSTALLATIONS, BEDDING SHALL BE IN ACCORDANCE W/ PIPE MANUFACTURER'S SPECIFICATIONS.
7. IN ASPHALT & CONCRETE PAVING AREAS, ALL MANHOLE COVERS AND WATER VALVE COVERS TO BE LEFT A MINIMUM OF 0.5 FEET BELOW THE AGGREGATE BASE MATERIAL UNTIL COMPLETION OF THE ASPHALT PAVING.
8. ALL WELLS LOCATED WITHIN THE DEVELOPMENT, REQUIRING SEALING, SHALL BE SEALED IN ACCORDANCE WITH CITY OF PORTERVILLE WELL-SEALING STANDARDS AND SPECIFICATIONS.
9. THE CITY OF PORTERVILLE PUBLIC WORKS DEPARTMENT SHALL BE NOTIFIED 24 HOURS PRIOR TO THE START OF ANY PORTION OF THE WORK WITHIN THE CITY RIGHT OF WAY. THE CONTRACTOR SHALL PROCURE AN ENCROACHMENT PERMIT FOR ALL WORK WITHIN THE CITY STREET RIGHT OF WAY.
10. DEVIATION FROM THESE PLANS SHALL NOT BE PERMITTED WITHOUT PRIOR APPROVAL FROM BOTH THE OWNER AND PROJECT ARCHITECT.
11. FINAL INSPECTION AND ACCEPTANCE OF THE WORK WITHIN THE STREET RIGHT OF WAY WILL BE BY THE CITY OF PORTERVILLE.
12. DUST CONTROL
    (A) PRE-CONSTRUCTION: THAT MATERIAL EXCAVATED OR GRADED BE SUFFICIENTLY WATERED TO PREVENT EXCESSIVE AMOUNTS OF DUST. WATERING SHOULD OCCUR AT LEAST TWICE A DAY WITH COMPLETE COVERAGE, PREFERABLY IN THE LATE MORNING AND AFTER WORK IS COMPLETED FOR THE DAY. THAT CLEARING, GRADING, EARTH MOVING, OR EXCAVATION ACTIVITIES CEASE DURING PERIODS OF HIGH WINDS GREATER THAN 20 MPH. THAT EARTH MATERIAL TRANSPORTED OFF-SITE BE EITHER SUFFICIENTLY WATERED OR SECURELY COVERED TO PREVENT EXCESSIVE AMOUNTS OF DUST. THAT AREAS DISTURBED BY CLEARING, EARTH MOVING, OR EXCAVATION ACTIVITIES BE MINIMIZED AT ALL TIMES. THAT WHERE ACCEPTABLE TO THE FIRE DEPARTMENT, WEED CONTROL SHOULD BE ACCOMPLISHED BY MOWING INSTEAD OF DISCING, THEREBY LEAVING THE GROUND UNDISTRIBUTED AND WITH A MULCH COVERING.

    (B) DURING CONSTRUCTION: AFTER CLEARING, GRADING, EARTH MOVING, OR EXCAVATION OPERATIONS, DURING THE CONSTRUCTION PHASE, FUGITIVE EMISSIONS SHOULD BE CONTROLLED BY THE FOLLOWING METHODS:
    1) THAT NONACTIVE PORTIONS OF THE CONSTRUCTION SITE BE RESTRICTED FROM VEHICULAR MOVEMENT.
    2) THAT ACTIVE PORTIONS OF THE SITE SHOULD BE SUFFICIENTLY WATERED TO PREVENT EXCESSIVE AMOUNTS OF DUST.

    (C) GENERAL FUGITIVE DUST: AT ALL TIMES, FUGITIVE DUST EMISSIONS SHOULD BE CONTROLLED USING THE FOLLOWING PROCEDURES:
    1) THAT ON SITE VEHICLE SPEED SHOULD BE LIMITED TO 15 MPH.
    2) THAT AREAS WITH VEHICLE TRAFFIC BE WATERED PERIODICALLY OR HAVE PETROLEUM-BASED PALLIATIVES APPLIED FOR STABILIZATION OF DUST EMISSIONS.
    3) THAT DURING ROUGH GRADING AND CONSTRUCTION, STREETS NEXT TO THE PROJECT SITE BE SWEPT AT LEAST ONCE PER DAY, OR AS REQUIRED TO REMOVE SILT WHICH MAY HAVE ACCUMULATED FROM CONSTRUCTION ACTIVITIES.
    4) THAT DURING ROUGH GRADING AND CONSTRUCTION, ACCESS TO THE SITE SHOULD REQUIRE THE BUILDING OF AN APRON INTO THE PROJECT SITE FROM ADJOINING PAVED ROADWAYS. THE APRON SHOULD BE PAVED OR HAVE PETROLEUM-BASED PALLIATIVE APPLIED.

    (D) OZONE PRECURSORS: AT ALL TIMES, OZONE PRECURSOR EMISSIONS SHOULD BE CONTROLLED BY THE FOLLOWING METHODS:
    1) THAT ALL INTERNAL COMBUSTION ENGINE DRIVE EQUIPMENT BE PROPERLY MAINTAINED AND WELL TUNED ACCORDING TO THE MANUFACTURER'S SPECIFICATIONS.
13. CONTRACTOR SHALL REFER TO ARCHITECTURAL, ELECTRICAL, MECHANICAL AND PLUMBING DRAWINGS FOR ADDITIONAL INFORMATION REGARDING SITE UTILITIES AND OTHER SITE IMPROVEMENTS.

ABBREVIATIONS

&	AND
@	AT
℄	CENTERLINE
∅	DIAMETER OR ROUND
#	POUND OR NUMBER
( )	EXISTING DATA
N	NORTH
S	SOUTH
W	WEST
E	EAST
NW	NORTHWEST
NE	NORTHEAST
SW	SOUTHWEST
SE	SOUTHEAST
AB	AGGREGATE BASE
AC	ASPHALT CONCRETE
ACP	ASBESTOS CEMENT PIPE
AD	AREA DRAIN
ADJ	ADJACENT
ALT	ALTERNATE
APPROX	APPROXIMATE
ARCH	ARCHITECT(URAL)
BC	BEGINNING OF CURVE
BCR	BEGINNING OF CURB RETURN
BLDG	BUILDING
BM	BENCH MARK
BO	BLOW OFF
BOT	BOTTOM
BR	TOP OF BRICK PAVERS
BSM	BIORETENTION SOIL MIX
BW	BOTH WAYS
C	TOP OF CONCRETE
CB	CATCH BASIN
CF	CUBIC FOOT
CI	CAST IRON
CIP	CAST IRON PIPE
CIPC	CAST-IN-PLACE CONCRETE
CJ	CONTROL JOINT
CMU	CONCRETE MASONRY UNIT
CO	CLEAN OUT
COL	COLUMN
CONC	CONCRETE
CONST	CONSTRUCT/CONSTRUCTION
CONT	CONTINUOUS
CONTR	CONTRACTOR
COR	CORNER
CR	CROWN
CY	CUBIC YARD
D	DRAIN
DA	DRIVE APPROACH
DEM	DEMOLISH, DEMOLITION
DET	DETAIL
DI	DRAIN OR DROP INLET
DIA	DIAMETER
DIAG	DIAGONAL
DIM	DIMENSION
DIP	DUCTILE IRON PIPE
DWG	DRAWING
EA	EACH
EC	END OF CURVE
ECR	END OF CURB RETURN
EJ	EXPANSION JOINT
ELEV	ELEVATION
ENCL	ENCLOSURE
EP	EDGE OF PAVEMENT
EQ	EQUAL
EQUIP	EQUIPMENT
ETW	EDGE OF TRAVEL WAY
EXCA	BOTTOM OF OVEREXCAVATION
EXIST	EXISTING
FD	FOUND
FDC	FIRE DEPARTMENT CONNECTION
FES	FLARED END SECTION
FF	FINISHED FLOOR ELEVATION
FG	FINISHED GRADE (TOP OF FINISHED SOIL OR DECOMPOSED GRANITE)
FH	FIRE HYDRANT
FL	FLOW LINE
FNC	FENCE
FOC	FACE OF CONCRETE
FOF	FACE OF FINISH
FOM	FACE OF MASONRY
FOS	FACE OF STUDS
FTG	FOOTING
GA	GAUGE
GALV	GALVANIZED
GB	GRADE BREAK
GC	GRADE CHANGE
GR	TOP OF GRATE
GV	GATE VALVE
HORIZ	HORIZONTAL
HP	HINGE POINT
HPT	HIGH POINT
HW	HEADWALL
HWL	HIGH WATER LINE
ID	INSIDE DIAMETER
INCL	INCLUDE(D), INCLUDING
INV	INVERT
JB	JUNCTION BOX
JT	JOINT
LT	LEFT
LP	LOW POINT
LGHT	LIGHT
MAS	MASONRY
MAX	MAXIMUM
MECH	MECHANICAL
MED	MEDIUM
MET	METAL
MFGR	MANUFACTURER
MH	MAN HOLE
MIN	MINIMUM
MISC	MISCELLANEOUS
MTR	METER
NIC	NOT IN CONTRACT
NTS	NOT TO SCALE
OC	ON CENTER
OD	OUTSIDE DIAMETER
OG	ORIGINAL GROUND
P	TOP OF PAVING
PAR	PARALLEL
PC	PROPERTY CORNER
PCC	POINT OF COMPOUND CURVATURE
PIV	POST INDICATOR VALVE
PK	PARKING
P/L	PROPERTY LINE
POC	POINT OF CONNECTION
PP	POWER POLE
PRC	POINT OF REVERSE CURVATURE
PRKG	PARKING
PROP	PROPERTY
PT	POINT
PVC	POLYVINYL CHLORIDE
PVMT	PAVEMENT
R	RIDGE
RAD	RADIUS
RCP	REINFORCED CONCRETE PIPE
RDR	ROOF DRAIN
REF	REFERENCE
REQD	REQUIRED
REV	REVISION
RP	RADIUS POINT
RR	RAILROAD
RT	RIGHT
R/W	RIGHT OF WAY
RWL	RAINWATER LEADER
SD	STORM DRAIN
SDMH	STORM DRAIN MANHOLE
SEC	SECTION
SERV	SERVICE
SF	SQUARE FOOT
SHT	SHEET
SIM	SIMILAR
SPEC	SPECIFICATION
SPECS	SPECIFICATIONS
SQ	SQUARE
SS	SANITARY SEWER
SSMH	SANITARY SEWER MANHOLE
SSDMH	SANITARY SEWER DROP MANHOLE
STA	STATION
STD	STANDARD
STL	STEEL
STRUCT	STRUCTURAL
SW	SWALE
SYM	SYMETRICAL
T&B	TOP AND BOTTOM
TBM	TEMPORARY BENCH MARK
TC	TOP OF CURB
TD	TOP OF DIKE
TEL	TELEPHONE
TEMP	TEMPORARY
TER	TOP OF EAST RAIL
TF	TOP OF FOOTING
TG	TOP OF GRAVEL
THK	THICK(NESS)
TMS	TOP OF MOWSTRIP
TNR	TOP OF NORTH RAIL
TOM	TOP OF MASONRY
TOS	TOP OF STEEL
TR	TOP OF RAIL
TSL	TOP OF SLAB
TSR	TOP OF SOUTH RAIL
TW	TOP OF WALL
TWR	TOP OF WEST RAIL
TYP	TYPICAL
UGD	UNDERGROUND
UNO	UNLESS NOTED OTHERWISE
VCP	VITRIFIED CLAY PIPE
VERT	VERTICAL
W/	WITH
W/O	WITHOUT
WD	WOOD
WM	WATER METER
WTR	WATER
WV	WATER VALVE

ABBREVIATIONS: WHEN USED IN THESE CIVIL DRAWINGS SHALL CONFORM TO THE ABOVE LIST, UNLESS NOTED OTHERWISE. OTHER SECTIONS (SUCH AS ARCHITECTURAL, STRUCTURAL, MECHANICAL, PLUMBING AND ELECTRICAL PLANS) MAY CONTAIN SPECIFIC REFERENCES AND LEGENDS WITH INTERPRETATIONS INTENDED ONLY FOR THOSE SECTIONS.

SYMBOL LEGEND

— G —	UNDERGROUND GAS
— FO —	UNDERGROUND FIBER OPTIC CABLE
— CATV —	UNDERGROUND CABLE TV
— T —	UNDERGROUND TELEPHONE
— E —	UNDERGROUND ELECTRICAL
— W —	WATER PIPING
— SS —	SANITARY SEWER PIPING
— SD —	STORM DRAIN PIPING
— IRR —	IRRIGATION PIPING
	FIRE HYDRANT
	WATER VALVE
	EXISTING LIGHT POLE
	STREET NAME SIGN WITH OR WITHOUT STOP SIGN AS NOTED ON PLANS.
	TRAFFIC SIGN
	TIMBER BARRICADE
	CHAIN LINK FENCE
	DIRECTION OF GUTTER FLOW
	DIRECTION OF FLOW IN LANDSCAPE AREAS.
	DIRECTION OF PIPE FLOW OR PAVEMENT FLOW.
	MANHOLE
	GUY WIRE
0.00	PROPOSED ELEVATION
(0.00) 0.00	EXISTING ELEVATION
× 100.00	EXISTING GROUND ELEVATION

LEGEND:
WHEN USED IN THESE CIVIL DRAWINGS SHALL CONFORM TO THE ABOVE LIST, UNLESS NOTED OTHERWISE. OTHER SHEETS WITHIN THESE PLANS MAY CONTAIN SPECIFIC REFERENCES AND LEGENDS WITH INTERPRETATIONS INTENDED ONLY FOR THOSE SHEETS.

APPROVALS

PLAN CHECK REVISION 1

FOURTH ST COMMUNITY CENTER AND PARK

HENDERSON AVE., PORTERVILLE, CA 93257

GENERAL NOTES & INFORMATION

NO.	REVISION	DATE
1	PLAN CHEK REVISION 1	5/17/24

PROJECT MANAGER: LANCE WIERSCHEM
DRAWN BY: W.V.
CHECKED BY: A.P.O.
DATE: 2024.01.15
PROJECT NUMBER: 2883-01-RC22
SHEET: C001

LANE PROJECT NO. 22306

J:\Jobs\2022\22306\Dwg\Production Drawings\C0_General Notes.dwg, C001, Aug 30, 2024 1:04pm, wa

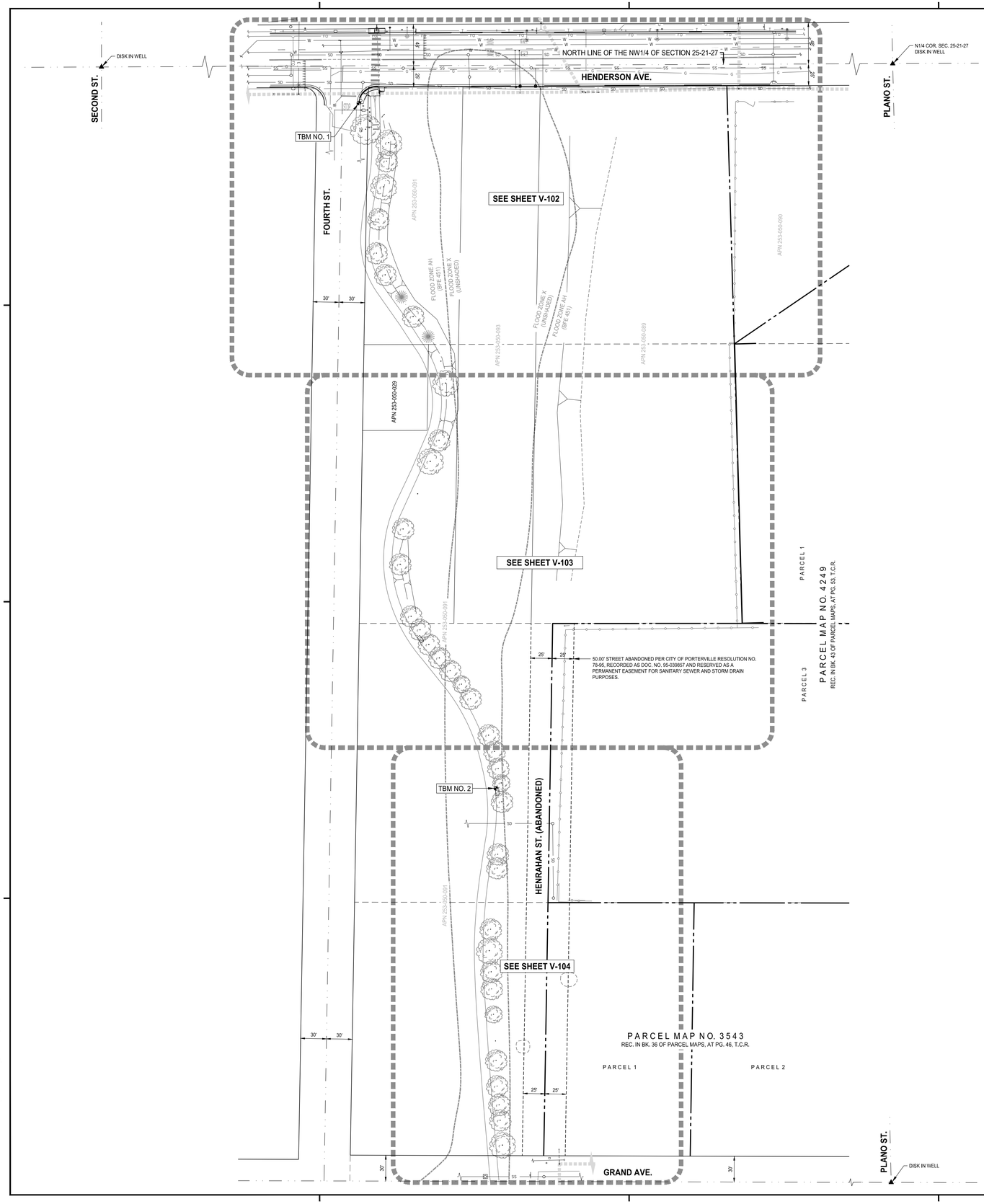

NORTH

GRAPHIC SCALE

60 0 30 60 120

1 INCH = 60 FT.

BASIS OF BEARINGS

THE BASIS OF BEARINGS FOR THIS SURVEY IS THE CALIFORNIA COORDINATE SYSTEM, ZONE 4, NAD 83, AS DETERMINED BY GPS OBSERVATIONS RELATIVE TO THE CALIFORNIA SURVEYING AND DRAFTING, INC. VIRTUAL SURVEY NETWORK, EPOCH DATE 2011.

LEGAL DESCRIPTION:

A PORTION OF LOTS 13, 14, 22 AND 23 OF PIONEER LAND CO's FIRST SUBDIVISION AT PORTERVILLE PER MAP RECORDED IN VOLUME 3 OF MAPS AT PAGE 34, T.C.R. SITUATED IN THE NW1/4 OF SECTION 25, TOWNSHIP 21 SOUTH, RANGE 27 EAST, MOUNT DIABLO BASE AND MERIDIAN, CITY OF PORTERVILLE, COUNTY OF TULARE, STATE OF CALIFORNIA.

BOUNDARY NOTE:

PROPERTY LINES SHOWN ARE BASED ON RECORD DATA AND FOUND MONUMENTS.

BENCHMARKS:

CITY BENCHMARK NO. 42: DISK IN WELL AT CENTER SEC. 25-21-27, INTERSECTION PLANO ST. AND MORTON AVE.

ELEV = 469.056 (NAVD 1988).

TBM NO. 1: CHISELED PLUS IN TOP OF CURB, SOUTH RETURN, SOUTHEAST CORNER OF HENDERSON AVE. AND FOURTH ST.

ELEV = 450.93 (NAVD 1988).

TBM NO. 2: CHISELED PLUS IN NORTHWEST CORNER OF CONCRETE PAD FOR MOST SOUTHERLY BENCH, EAST SIDE OF PEDESTRIAN PATH.

ELEV = 450.11 (NAVD 1988).

VERTICAL DATUM NOTE:

1. ADD 400.00 FEET TO ELEVATIONS SHOWN ON PLAN TO OBTAIN DATUM BASED ON NORTH AMERICAN VERTICAL DATUM 1988 (NAVD 1988).

DATE OF SURVEY NOTE:

FIELD WORK FOR THIS TOPOGRAPHIC SURVEY WAS COMPLETED ON NOVEMBER 9, 2022.

FLOOD HAZARD ZONE AH & X (UNSHADED)

AS DELINEATED ON THE FEDERAL EMERGENCY MANAGEMENT AGENCY'S FLOOD INSURANCE RATE MAP (MAP NUMBER 06107C1634E) FOR COMMUNITY NO. 060407, CITY OF PORTERVILLE, TULARE COUNTY, CALIFORNIA, EFFECTIVE JUNE 16, 2009, THE PROPERTY SHOWN ON THIS MAP LIES PARTIALLY WITHIN ZONE AH, WHICH ARE SPECIAL FLOOD HAZARD AREAS SUBJECT TO INUNDATION BY THE 1% ANNUAL CHANCE FLOOD WITH FLOOD DEPTHS OF 1 TO 3 FEET (USUALLY AREAS OF PONDING) AND BASE FLOOD ELEVATIONS DETERMINED, AND PARTIALLY WITHIN FLOOD ZONE AREA DESIGNATED ZONE X (UNSHADED), WHICH ARE AREAS OUTSIDE OF 0.2% ANNUAL CHANCE FLOODING.

UNDERGROUND UTILITY NOTE:

THE EXISTING UNDERGROUND UTILITY LINES SHOWN ARE BASED ON THE LOCATION OF VISIBLE SURFACE IMPROVEMENTS, CITY OR COUNTY RECORD DRAWINGS, AND UTILITY COMPANY RECORD DRAWINGS. IN SOME CASES IT HAS NOT BEEN POSSIBLE TO OBTAIN PERTINENT INFORMATION FROM THESE COMPANIES. ALTHOUGH EVERY EFFORT HAS BEEN MADE TO ACCURATELY SHOW THE UNDERGROUND UTILITY LINES, IT WILL BE NECESSARY TO CONFIRM THE LOCATIONS BY NOTIFYING UNDERGROUND SERVICE ALERT.

TELEPHONE U.S.A. AT 811 PRIOR TO DIGGING. THE DEPTHS OF ALL LINES MUST BE DETERMINED BY CAREFULLY PROBING OR POTHOLING UNDER UTILITY COMPANY SUPERVISION.

DRY UTILITY INFORMATION WAS REQUESTED FROM CHARTER COMMUNICATIONS, OACYS TECHNOLOGY, AT&T, SO CAL GAS AND SOUTHERN CALIFORNIA EDISON ON NOVEMBER 3, 2022.

CHARTER COMMUNICATIONS RECORD DRAWINGS WERE NOT RECEIVED AS OF NOVEMBER 16, 2022.

OACYS TECHNOLOGY REPORTED 'NO FACILITIES IN THIS AREA' ON NOVEMBER 3, 2022.

AT&T RECORD DRAWINGS WERE RECEIVED ON NOVEMBER 4, 2022.

SO CAL GAS RECORD DRAWINGS WERE RECEIVED ON NOVEMBER 4, 2022.

SOUTHERN CALIFORNIA EDISON RECORD DRAWINGS WERE RECEIVED ON DECEMBER 12, 2022.

CITY UTILITY INFORMATION WAS TAKEN FROM THEIR GIS WEBSITE.

LEGEND

× 51.71	ORIGINAL GROUND ELEVATION (UNLESS NOTED OTHERWISE)
C	TOP OF CONCRETE
CLF	CHAIN LINK FENCE
CR	CROWN
DI	DRAIN INLET
EP	EDGE OF PAVEMENT
FL	FLOW LINE
GR	TOP OF GRATE
HP	HINGE POINT
P	TOP OF PAVEMENT
SW	SWALE
TOE	TOE OF SLOPE
TC	TOP OF CURB

SIGNS

PED-X	PEDESTRIAN SIGN
STN	STREET NAME SIGN
STOP	STOP SIGN

GENERAL SYMBOLS

▲	MONUMENT FOUND AS DESCRIBED
TBM	TEMPORARY BENCH MARK
	STREET LIGHT
	DECIDUOUS TREE TRUNK AND CANOPY DRAWN TO SCALE
	EVERGREEN TREE TRUNK AND CANOPY DRAWN TO SCALE

WET UTILITIES

DI	DRAIN INLET
FH	FIRE HYDRANT
ICV OR ICV	IRRIGATION CONTROL VALVE
SV	"SEWER" SERVICE MARKING ON TC
WM	WATER METER
WV	"WATER" SERVICE MARKING ON TC
WV	WATER VALVE
MH	MANHOLE

DRY UTILITIES

ELEC	ELECTRICAL BOX
GAS	GAS VALVE
GUY	GUY ANCHOR
TPB	TELEPHONE PULL BOX
TS	TRAFFIC SIGNAL BOX
	UTILITY POLE

UTILITY LINETYPES

E	ELECTRICAL
FO	FIBER OPTIC
G	GAS
SD	STORM DRAIN
SS	SANITARY SEWER
T	TELEPHONE
W	WATER

rrm design group

rrmdesign.com | (805) 543-1794
3765 SOUTH HIGUERA STREET, SUITE 102
SAN LUIS OBISPO, CA 93401

THE INCLUDED DRAWINGS, SPECIFICATIONS, IDEAS, DESIGNS AND ARRANGEMENTS REPRESENTED THEREBY ARE AND SHALL REMAIN THE PROPERTY OF RRM DESIGN GROUP AND NO PART THEREOF SHALL BE COPIED, DISCLOSED TO OTHERS OR USED IN CONNECTION WITH ANY WORK OR PROJECT OTHER THAN THE SPECIFIED PROJECT FOR WHICH THEY HAVE BEEN PREPARED AND DEVELOPED WITHOUT THE WRITTEN CONSENT OF RRM DESIGN GROUP. VISUAL CONTACT WITH THESE DRAWINGS OR OTHER PROJECT RECORDS SHALL CONSTITUTE EVIDENCE OF THE ACCEPTANCE OF THESE RESTRICTIONS. SUBMITTAL OF THESE DOCUMENTS FOR PUBLIC AGENCY REVIEW SHALL NOT BE CONSIDERED A WAIVER OF RRM DESIGN GROUP'S RIGHTS.

RRM DESIGN GROUP COPYRIGHT 2023.
RRM IS A CALIFORNIA CORPORATION

LICENSED LAND SURVEYOR
Ronald D. Snow
No. 6859
STATE OF CALIFORNIA

05/16/2024

CONSULTANT

LANE ENGINEERS INC.
CIVIL • STRUCTURAL • SURVEYING
979 N. BLACKSTONE STREET
TULARE, CALIFORNIA 93274
(559) 688-5263
www.laneengineers.com

AGENCY

FOURTH ST COMMUNITY CENTER AND PARK

HENDERSON AVE., PORTERVILLE, CA 93257

TOPOGRAPHIC SURVEY

NO.	REVISION	DATE
1	PLAN CHEK REVISION 1	5/17/24

PLAN CHECK REVISION 1

PROJECT MANAGER
LANCE WIERSCHEM

DRAWN BY	CHECKED BY
W.V.	A.P.O.

DATE
2024.01.15

PROJECT NUMBER
2883-01-RC22

SHEET
V-101

LANE PROJECT NO. 22306

J:\Jobs\2022\22306\Dwg\TOPO.dwg, V-101, May 16, 2024 1:17pm, wa

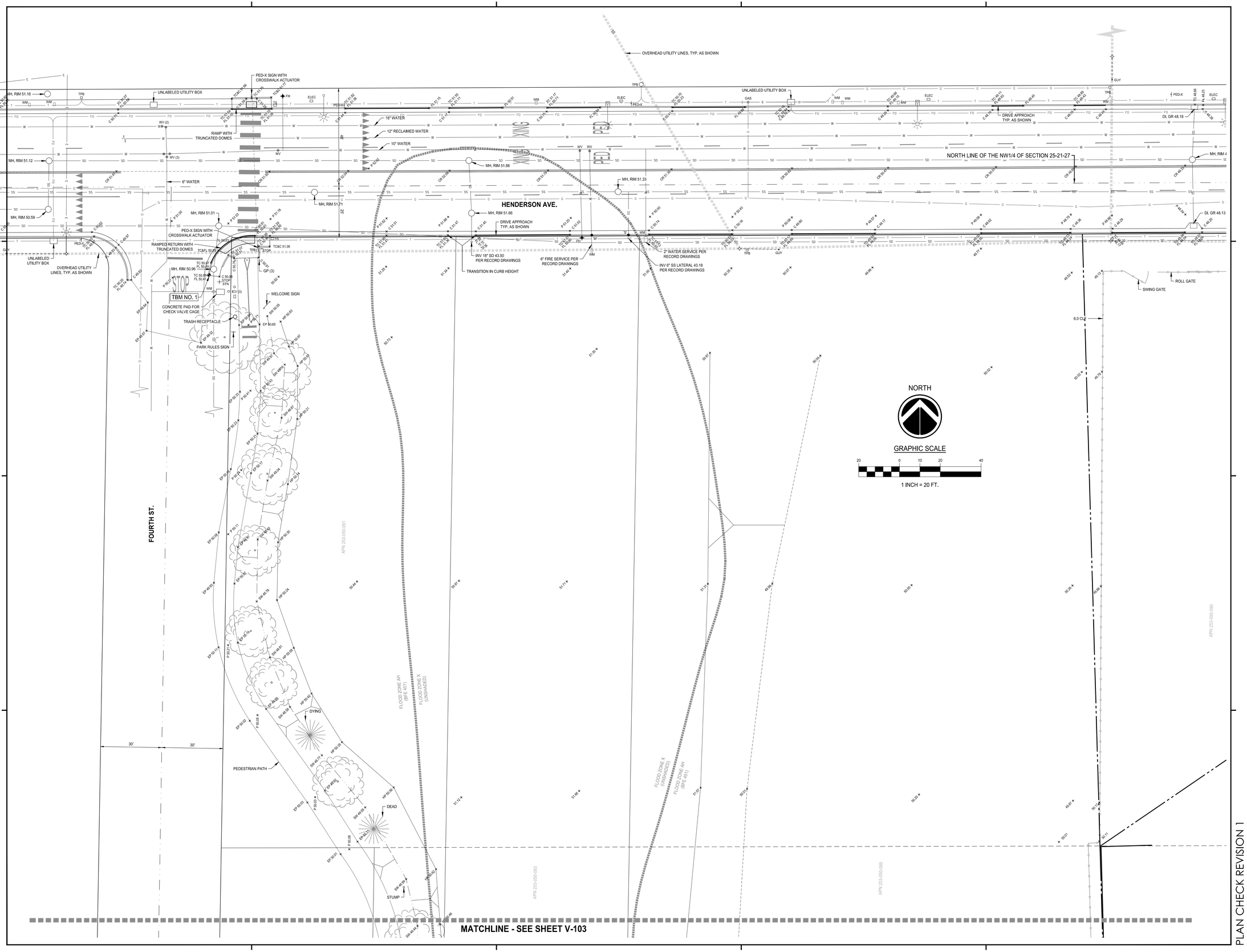

J:\Jobs\2022\22306\Dwg\TOPO.dwg, V-102, May 16, 2024 1:17pm, wa

rrm design group

rrmdesign.com | (805) 543-1794
3765 SOUTH HIGUERA STREET, SUITE 102
SAN LUIS OBISPO, CA 93401

THE INCLUDED DRAWINGS, SPECIFICATIONS, IDEAS, DESIGNS AND ARRANGEMENTS REPRESENTED THEREBY ARE AND SHALL REMAIN THE PROPERTY OF RRM DESIGN GROUP AND NO PART THEREOF SHALL BE COPIED, DISCLOSED TO OTHERS OR USED IN CONNECTION WITH ANY WORK OR PROJECT OTHER THAN THE SPECIFIED PROJECT FOR WHICH THEY HAVE BEEN PREPARED AND DEVELOPED WITHOUT THE WRITTEN CONSENT OF RRM DESIGN GROUP. VISUAL CONTACT WITH THESE DRAWINGS OR SPECIFICATIONS SHALL CONSTITUTE CONCLUSIVE EVIDENCE OF ACCEPTANCE OF THESE RESTRICTIONS. SUBMITTAL OF THESE DOCUMENTS FOR PUBLIC AGENCY REVIEW SHALL NOT BE CONSIDERED A WAIVER OF RRM DESIGN GROUP'S RIGHTS.
RRM DESIGN GROUP COPYRIGHT 2023.
RRM IS A CALIFORNIA CORPORATION

LICENSED LAND SURVEYOR
Ronald D. Snow
No. 6859
STATE OF CALIFORNIA
05/16/2024

CONSULTANT

LANE ENGINEERS INC.
CIVIL • STRUCTURAL • SURVEYING
979 N. BLACKSTONE STREET
TULARE, CALIFORNIA 93274
(559) 688-5263
www.laneengineers.com

AGENCY

FOURTH ST COMMUNITY CENTER AND PARK

HENDERSON AVE., PORTERVILLE, CA 93257

TOPOGRAPHIC SURVEY

NO.	REVISION	DATE
1	PLAN CHEK REVISION 1	5/17/24

PROJECT MANAGER
LANCE WIERSCHEM

DRAWN BY: W.V.
CHECKED BY: A.P.O.

DATE
2024.01.15

PROJECT NUMBER
2883-01-RC22

SHEET
V-102

PLAN CHECK REVISION 1

LANE PROJECT NO. 22306

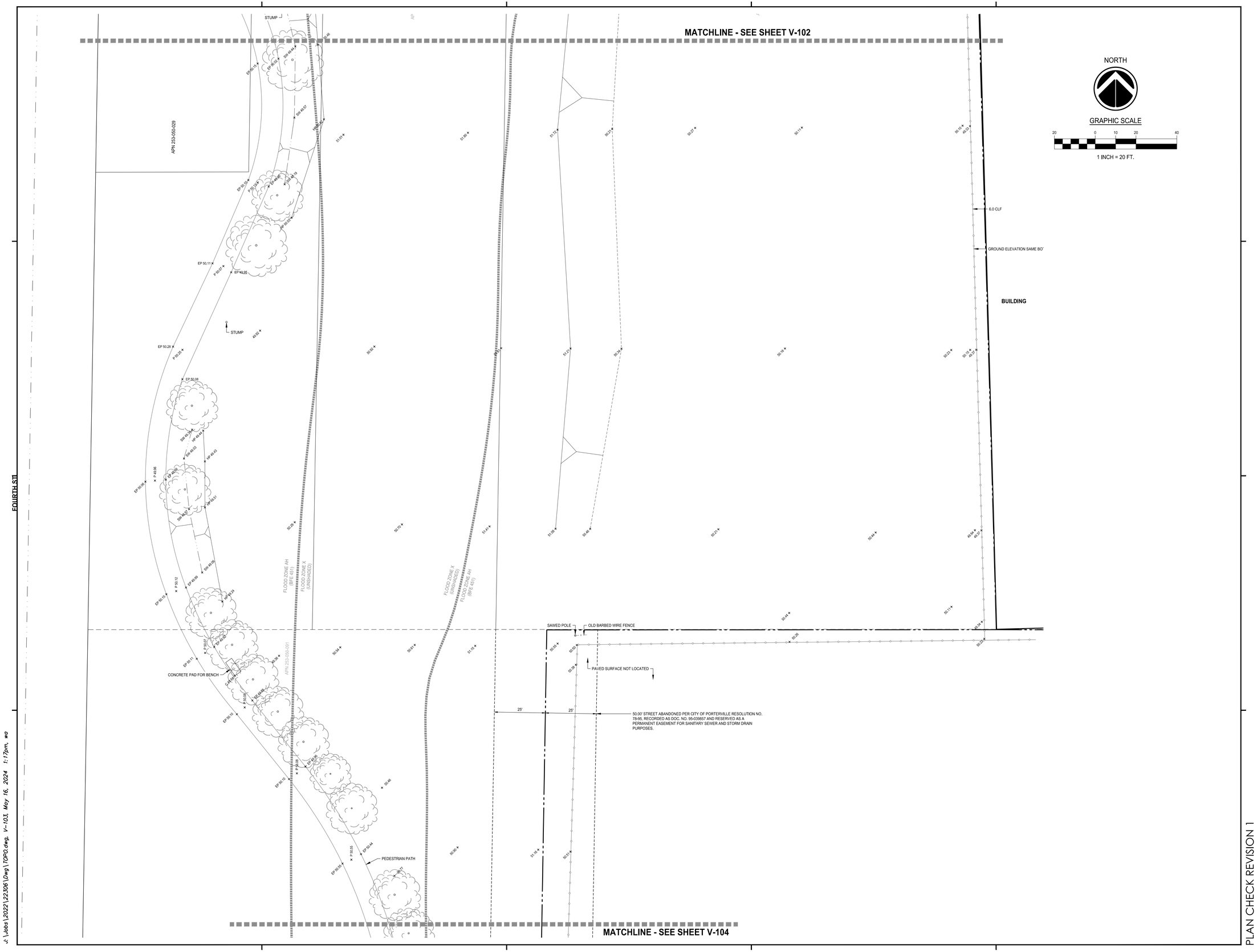

rrm design group
rrmdesign.com | (805) 543-1794
3765 SOUTH HIGUERA STREET, SUITE 102
SAN LUIS OBISPO, CA 93401

THE INCLUDED DRAWINGS, SPECIFICATIONS, IDEAS, DESIGNS AND ARRANGEMENTS REPRESENTED THEREIN ARE AND SHALL REMAIN THE PROPERTY OF RRM DESIGN GROUP AND NO PART THEREOF SHALL BE COPIED, DISCLOSED TO OTHERS OR USED IN CONNECTION WITH ANY WORK OR PROJECT OTHER THAN THE SPECIFIED PROJECT FOR WHICH THEY HAVE BEEN PREPARED AND DEVELOPED WITHOUT THE WRITTEN CONSENT OF RRM DESIGN GROUP. VISUAL CONTACT WITH THESE DRAWINGS OR OTHER PROJECT DOCUMENTS SHALL CONSTITUTE PROOF OF ACCEPTANCE OF THESE RESTRICTIONS. SUBMITTAL OF THESE DOCUMENTS FOR PUBLIC AGENCY REVIEW SHALL NOT BE CONSIDERED A WAIVER OF RRM DESIGN GROUP'S RIGHTS.
RRM DESIGN GROUP COPYRIGHT 2023.
RRM IS A CALIFORNIA CORPORATION

LICENSED LAND SURVEYOR
Ronald D. Snow
No. 6859
STATE OF CALIFORNIA
05/16/2024

CONSULTANT

LANE ENGINEERS INC.
CIVIL • STRUCTURAL • SURVEYING
979 N. BLACKSTONE STREET
TULARE, CALIFORNIA 93274
(559) 688-5263
www.laneengineers.com

AGENCY

FOURTH ST COMMUNITY CENTER AND PARK

HENDERSON AVE., PORTERVILLE, CA 93257

TOPOGRAPHIC SURVEY

NO.	REVISION	DATE
1	PLAN CHEK REVISION 1	5/17/24

PROJECT MANAGER
LANCE WIERSCHEM

DRAWN BY	CHECKED BY
W.V.	A.P.O.

DATE
2024.01.15

PROJECT NUMBER
2883-01-RC22

SHEET
V-103

PLAN CHECK REVISION 1

LANE PROJECT NO. 22306

J:\Jobs\2022\22306\Dwg\TOPO.dwg, V-103, May 16, 2024 1:17pm, wa

NORTH

GRAPHIC SCALE

20 0 10 20 40

1 INCH = 20 FT.

rrm design group
rrmdesign.com | (805) 543-1794
3765 SOUTH HIGUERA STREET, SUITE 102
SAN LUIS OBISPO, CA 93401

THE INCLUDED DRAWINGS, SPECIFICATIONS, IDEAS, DESIGNS AND ARRANGEMENTS REPRESENTED THEREBY ARE AND SHALL REMAIN THE PROPERTY OF RRM DESIGN GROUP AND NO PART THEREOF SHALL BE COPIED, DISCLOSED TO OTHERS OR USED IN CONNECTION WITH ANY WORK OR PROJECT OTHER THAN THE SPECIFIED PROJECT FOR WHICH THEY HAVE BEEN PREPARED AND DEVELOPED WITHOUT THE WRITTEN CONSENT OF RRM DESIGN GROUP. VISUAL CONTACT WITH THESE DRAWINGS OR OTHER PROJECT DOCUMENTS SHALL CONSTITUTE PROOF OF ACCEPTANCE OF THESE RESTRICTIONS. SUBMITTAL OF THESE DOCUMENTS FOR PUBLIC AGENCY REVIEW SHALL NOT BE CONSIDERED A WAIVER OF RRM DESIGN GROUP'S RIGHTS.
RRM DESIGN GROUP COPYRIGHT 2023.
RRM IS A CALIFORNIA CORPORATION

LICENSED LAND SURVEYOR
Ronald D. Snow
No. 6859
STATE OF CALIFORNIA
05/16/2024

CONSULTANT

LANE ENGINEERS INC.
CIVIL • STRUCTURAL • SURVEYING
979 N. BLACKSTONE STREET
TULARE, CALIFORNIA 93274
(559) 688-5263
www.laneengineers.com

AGENCY

FOURTH ST COMMUNITY CENTER AND PARK

HENDERSON AVE., PORTERVILLE, CA 93257

TOPOGRAPHIC SURVEY

NO.	REVISION	DATE
1	PLAN CHEK REVISION 1	5/17/24

PROJECT MANAGER
LANCE WIERSCHEM

DRAWN BY W.V.
CHECKED BY A.P.O.

DATE
2024.01.15

PROJECT NUMBER
2883-01-RC22

SHEET
V-104

PLAN CHECK REVISION 1

LANE PROJECT NO. 22306

J:\Jobs\2022\22306\Dwg\TOPO.dwg, V-104, May 16, 2024 1:17pm, wo

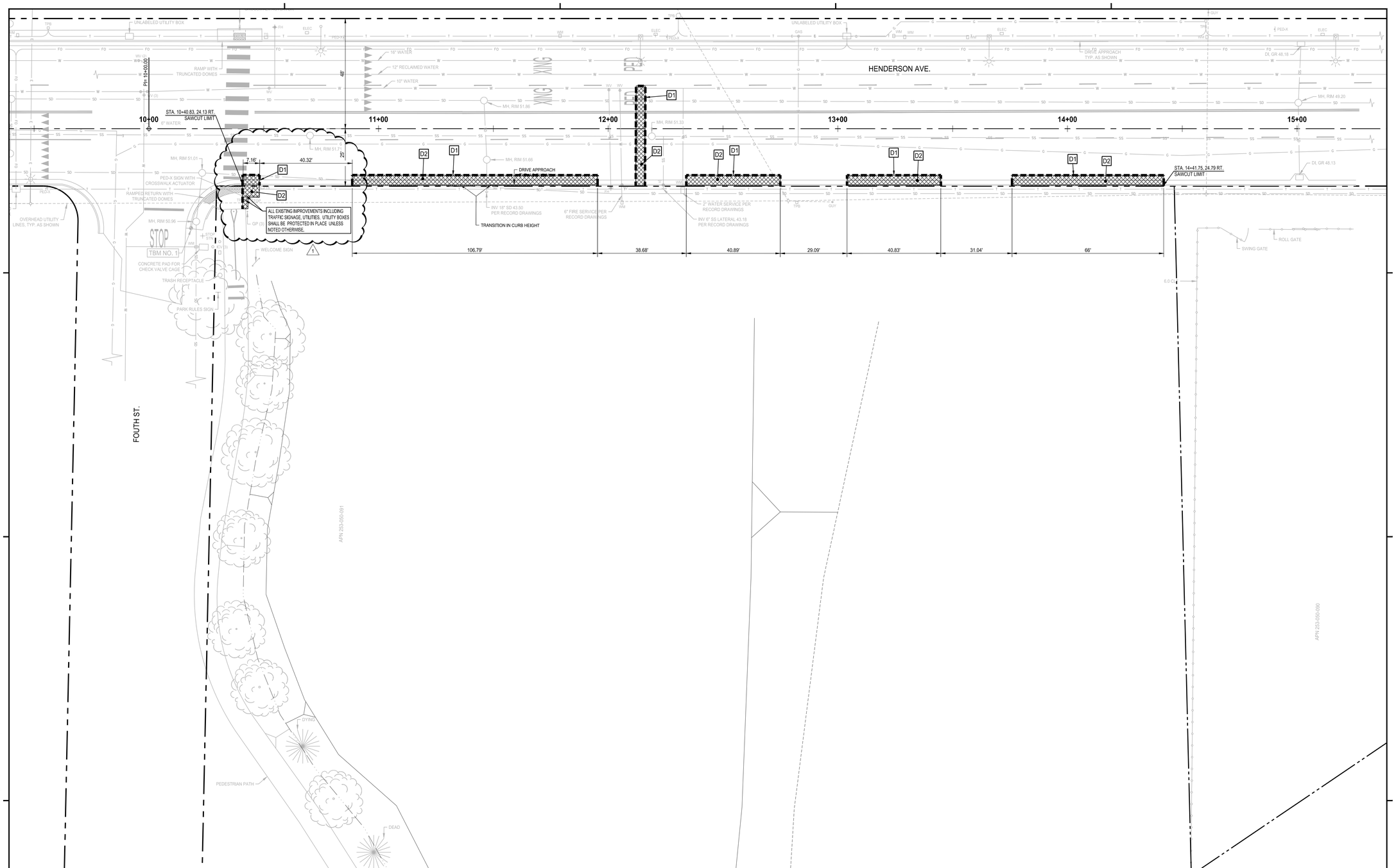

DEMOLITION NOTES

(THIS SHEET ONLY)

1. REFER TO SHEET C001 FOR BENCHMARKS, GENERAL NOTES, INFORMATION, AND SPECIFICATIONS.
2. ALL WORK AND MATERIALS WITHIN CITY RIGHT-OF-WAY SHALL BE IN ACCORDANCE WITH THE CITY OF PORTERVILLE IMPROVEMENT STANDARDS. AN ENCROACHMENT PERMIT SHALL BE OBTAINED BY THE CONTRACTOR PRIOR TO DOING ANY WORK WITHIN THE CITY RIGHT-OF-WAY. SIGNAGE AND FLAGGING SHALL BE IN ACCORDANCE WITH THE REQUIREMENTS SET FORTH IN THE CURRENT AMENDED VERSION OF THE MANUAL ON UNIFORM TRAFFIC CONTROL DEVICES FOR USE IN CALIFORNIA.
3. TEXT FROM THE TOPOGRAPHIC SURVEY ARE SHOWN FADED ON THIS DRAWING.
4. ALL IMPROVEMENTS NOT NOTED FOR SALVAGE, REMOVAL, OR RELOCATION SHALL BE PROTECTED IN PLACE.
5. ALL HOLES AND TRENCHES CREATED FROM DEMOLITION AND REMOVAL SHALL BE BACKFILLED AND COMPACTED IN ACCORDANCE WITH THE REQUIREMENTS NOTED ON THESE PLANS.
6. IT SHALL BE THE CONTRACTOR'S RESPONSIBILITY TO FIELD VERIFY ALL ITEMS NOTED FOR REMOVAL WITH THE OWNER. PRIOR TO CONSTRUCTION. THE CONTRACTOR SHALL VERIFY DIMENSIONS FOR DEMOLITION.
7. ANY EXISTING SURFACE STRUCTURES OR IMPROVEMENTS (E.G. UTILITY BOXES, METER BOXES, WATER VALVES, TRASH BINS, BENCHES, SIGNS, PAVEMENT STRIPING, STREET LIGHTS, IRRIGATION SYSTEMS ETC.) THAT ARE DAMAGED OR TEMPORARILY REMOVED DURING DEMOLITION SHALL BE REPLACED IN KIND, U.N.O.
8. REMOVAL OF ANY IMPROVEMENTS FROM THE SITE SHALL BE DISPOSED OF IN A PROPER MANNER PER FEDERAL, STATE, AND OR LOCAL LAWS AND ORDINANCES.
9. CONTRACTOR SHALL BE RESPONSIBLE FOR RAISING ALL VALVES, MANHOLES AND ANY OTHER CITY OF PORTERVILLE VAULTS AND BOXES FOUND IN THE STREET WHETHER OR NOT THEY ARE SHOWN ON THESE PLANS. PRIVATE UTILITY COMPANIES ARE RESPONSIBLE FOR RAISING THEIR VALVES, MANHOLES AND ANY OTHER VAULTS AND BOXES. CONTRACTOR SHALL COORDINATE WITH PRIVATE UTILITY COMPANIES WHEN SUCH WORK IS REQUIRED.
10. ANY EXISTING REGULATORY OR WARNING SIGNS REMOVED FOR CONSTRUCTION SHALL BE REPLACED WITH TEMPORARY SIGNS AS NECESSARY TO SAFELY DIRECT TRAFFIC UNTIL THE NEW PERMANENET SIGNS ARE INSTALLED IN THEIR PERMANENT LOCATIONS PER THESE OR ACCOMPANYING PLANS.

LEGEND

- IMPROVEMENTS TO BE REMOVED
- PAVEMENT SAWCUT
- PROPERTY BOUNDARY
- STREET CENTERLINE

DEMOLITION KEYNOTES

(THIS SHEET ONLY)

D1 SAWCUT A.C. PAVEMENT TO A CLEAN, VERTICAL EDGE AND MATCH NEW PAVING TO PROVIDE A SMOOTH, UNIFORM SURFACE.

INDICATED THUS:

D2 UNLESS SHOWN OR NOTED OTHERWISE, REMOVE EXISTING SURFACE IMPROVEMENTS: CURB, CONCRETE/ASPHALT PAVEMENT & AGGREGATE BASE, SIDEWALK, ETC. CONTRACTOR SHALL COORDINATE DEMOLITION WITH OWNER.

INDICATED THUS:

NORTH

GRAPHIC SCALE

20 0 10 20 40

1 INCH = 20 FT.

rrm design group
rrmdesign.com | (805) 543-1794
3765 SOUTH HIGUERA STREET, SUITE 102
SAN LUIS OBISPO, CA 93401

THE INCLUDED DRAWINGS, SPECIFICATIONS, IDEAS, DESIGNS AND ARRANGEMENTS REPRESENTED THEREIN ARE AND SHALL REMAIN THE PROPERTY OF RRM DESIGN GROUP AND NO PART THEREOF SHALL BE COPIED, DISCLOSED TO OTHERS OR USED IN CONNECTION WITH ANY WORK OR PROJECT OTHER THAN THE SPECIFIED PROJECT FOR WHICH THEY HAVE BEEN PREPARED AND DEVELOPED WITHOUT THE WRITTEN CONSENT OF RRM DESIGN GROUP. VISUAL CONTACT WITH THESE DRAWINGS OR OTHER PROJECT DOCUMENTS SHALL CONSTITUTE PROOF OF ACCEPTANCE OF THESE RESTRICTIONS. SUBMITTAL OF THESE DOCUMENTS FOR PUBLIC AGENCY REVIEW SHALL NOT BE CONSIDERED A WAIVER OF RRM DESIGN GROUP'S RIGHTS.
RRM DESIGN GROUP COPYRIGHT 2023.
RRM IS A CALIFORNIA CORPORATION

REGISTERED PROFESSIONAL ENGINEER
WA VANG
C.E. 80967
08/30/2024
CIVIL
STATE OF CALIFORNIA

CONSULTANT

LANE ENGINEERS INC.
CIVIL • STRUCTURAL • SURVEYING
979 N. BLACKSTONE STREET
TULARE, CALIFORNIA 93274
(559) 688-5263
www.laneengineers.com

AGENCY

FOURTH ST COMMUNITY CENTER AND PARK

HENDERSON AVE., PORTERVILLE, CA 93257

DEMOLITION PLAN

NO.	REVISION	DATE
1	PLAN CHEK REVISION 1	5/17/24

PROJECT MANAGER: LANCE WIERSCHEM
DRAWN BY: W.V.
CHECKED BY: A.P.O.
DATE: 2024.01.15
PROJECT NUMBER: 2883-01-RC22
SHEET: CD101

PLAN CHECK REVISION 1

LANE PROJECT NO. 22306

J:\Jobs\2022\22306\Dwg\Production Drawings\CD_Demolition Plan.dwg, CD101, Aug 30, 2024 1:05pm, wa

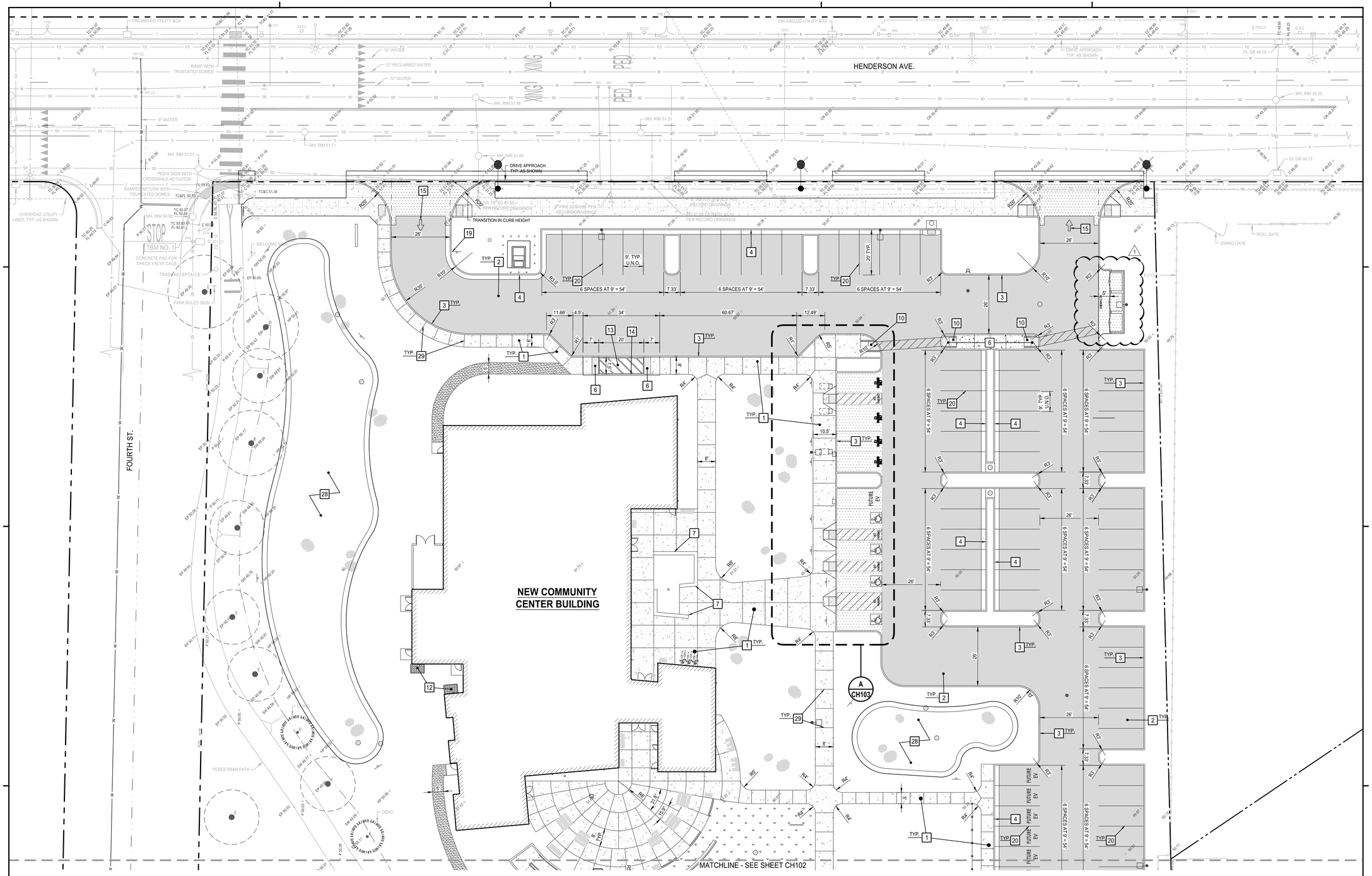

SITE NOTES

(SHEETS CH101 - CH103 ONLY)

1. REFER TO SHEETS C001 FOR BENCHMARKS, GENERAL NOTES, INFORMATION, AND SPECIFICATIONS.
2. CONTRACTOR SHALL VERIFY ALL BUILDING AND SITE DIMENSIONS WITH ARCHITECTURAL PLANS PRIOR TO CONSTRUCTION.
3. REFER TO ARCHITECTURAL, PLUMBING, MECHANICAL AND ELECTRICAL DWGS. FOR ADDITIONAL INFORMATION.
4. SEE WET PIPING PLAN FOR ALL DETAILS RELATED TO MANHOLES, CATCH BASINS AND ANY OTHER UTILITY INFRASTRUCTURE.
5. ALL DIMENSIONS SHOWN TO CURB ARE TO FACE OF CURB UNLESS SHOWN OR NOTED OTHERWISE.
6. SEE SHEETS CC101 & CC101 FOR OFF-SITE IMPROVEMENTS ON HENDERSON AVENUE & FOURTH STREET.

LEGEND

- NEW CONCRETE SIDEWALK, FLATWORK AND MISCELLANEOUS CONCRETE
- NEW CONCRETE PAVEMENT
- NEW ASPHALT PAVEMENT
- PROPERTY BOUNDARY

CONSTRUCTION KEYNOTES

(SHEETS CH101 - CH103 ONLY)

1. CONSTRUCT 4" THICK CONCRETE WALK WITH THICKENED EDGES, SEE DETAIL 24/CC501.
2. CONSTRUCT ASPHALT CONCRETE PAVEMENT, SEE PAVING PLANS SHEET CS101 - CS103.
3. CONSTRUCT CONCRETE BARRIER CURB. SEE DETAIL 12/CC501.
4. CONSTRUCT CONCRETE CURB & GUTTER CURB. SEE DETAIL 41/CC501.
5. CONSTRUCT ACCESSIBILITY RAMP. SEE DETAIL 12/CC502.
6. FURNISH & INSTALL DETECTABLE WARNING SURFACE, SEE DETAIL 13/CC502.
7. CONCRETE SEAT WALL, SEE LANDSCAPE CONSTRUCTION DWGS.
8. CONCRETE RAMP WALL, SEE LANDSCAPE CONSTRUCTION DWGS.
9. CONSTRUCT CONCRETE STEPS, SEE LANDSCAPE CONSTRUCTION DWGS.
10. CONSTRUCT ACCESSIBILITY RAMP. SEE DETAIL 14/CC502.
11. CONSTRUCT HANDRAILS, SEE LANDSCAPE CONSTRUCTION DWGS.
12. FURNISH & INSTALL ENERGY DISSIPATION DEVICE FOR ROOF DOWNSPOUTS. SEE DETAIL 13/CC503
13. CONSTRUCT PASSENGER DROP-OFF & LOADING ZONE. SEE DETAIL 33/CC502.
14. CONSTRUCT CONCRETE RAMP RETAINING CURB, SEE DETAIL 34/CC502.
15. INSTALL DIRECTIONAL PAVEMENT ARROW. SEE DETAIL 44/CC502.
16. INSTALL ACCESSIBLE PARKING EMBLEM MARKING. SEE DETAIL 31/CC502.
17. FURNISH & INSTALL ACCESSIBLE PARKING SIGN INCLUDING POST AND FOOTINGS. SEE DETAIL 32/CC502 (SIGN A)
18. FURNISH & INSTALL "VAN ACCESSIBLE" PARKING SIGN INCLUDING POST AND FOOTINGS. SEE DETAIL 32/CC502 (SIGN B).
19. FURNISH & INSTALL "UNAUTHORIZED" VEHICLE SIGN INCLUDING POST AND FOOTINGS. SEE DETAIL 42/CC502.
20. FURNISH & INSTALL 4" WIDE WHITE PARKING STRIPES, TYP., U.N.O.
21. FURNISH & INSTALL 4" WIDE BLUE PARKING STRIPE.
22. NEW ACCESS AISLE WITH "NO PARKING" MARKING IN WHITE COLOR. "NO PARKING" LETTERS SHALL BE 12" MINIMUM IN HEIGHT. DIAGONAL CROSS HATCH PATTERN SHALL BE WHITE PAINT 4" WIDE SPACED AT 36" O.C. MAX.
23. FURNISH & INSTALL 4" WIDE GREEN PARKING STRIPE FOR ELECTRIC VEHICLE PARKING SPACES.
24. FURNISH & INSTALL ELECTRIC VEHICLE CHARGING ONLY SIGN. PROVIDE ALL SIGN HARDWARE, POST & FOOTING FOR COMPLETE INSTALLATION. SEE DETAIL 14/CC503
25. FURNISH & INSTALL ELECTRIC VEHICLE CHARGING ONLY SIGN WITH ISA EMBLEM & VAN ACCESSIBLE . PROVIDE ALL SIGN HARDWARE, POST & FOOTING FOR COMPLETE INSTALLATION. SEE DETAIL 24/CC503.
26. FURNISH & INSTALL ELECTRIC VEHICLE CHARGING ONLY SIGN WITH ISA EMBLEM. PROVIDE ALL SIGN HARDWARE, POST & FOOTING FOR COMPLETE INSTALLATION. SEE DETAIL 31/CC503.
27. FURNISH & INSTALL 4" WIDE WHITE MARKING "EV CHARGING ONLY" AT ELECTRIC VEHICLE PARKING SPACES PER MUTCD FIG. 3B-108(CA). SEE DETAIL 32/CC503.
28. BIO RETENTION AREA, SEE DETAIL 34/CC503.
29. CONCRETE JOINTS, SEE DETAIL 24/CC501.

NORTH

GRAPHIC SCALE

20 0 10 20 40

1 INCH = 20 FT.

rrm design group
rrmdesign.com | (805) 543-1794
3765 SOUTH HIGUERA STREET, SUITE 102
SAN LUIS OBISPO, CA 93401

THE INCLUDED DRAWINGS, SPECIFICATIONS, IDEAS, DESIGNS AND ARRANGEMENTS REPRESENTED THEREIN ARE AND SHALL REMAIN THE PROPERTY OF RRM DESIGN GROUP AND NO PART THEREOF SHALL BE COPIED, DISCLOSED TO OTHERS OR USED IN CONNECTION WITH ANY WORK OR PROJECT OTHER THAN THE SPECIFIED PROJECT FOR WHICH THEY HAVE BEEN PREPARED AND DEVELOPED WITHOUT THE WRITTEN CONSENT OF RRM DESIGN GROUP. VISUAL CONTACT WITH THESE DRAWINGS OR SPECIFICATIONS SHALL CONSTITUTE PROOF OF ACCEPTANCE OF THE ABOVE RESTRICTIONS. SUBMITTAL OF THESE DOCUMENTS FOR PUBLIC AGENCY REVIEW SHALL NOT BE CONSIDERED A WAIVER OF RRM DESIGN GROUP'S RIGHTS.
RRM DESIGN GROUP COPYRIGHT 2023.
RRM IS A CALIFORNIA CORPORATION

REGISTERED PROFESSIONAL ENGINEER
WA VANG
C-CE: 86967
08/30/2024
CIVIL
STATE OF CALIFORNIA

CONSULTANT

LANE ENGINEERS INC.
CIVIL • STRUCTURAL • SURVEYING
979 N. BLACKSTONE STREET
TULARE, CALIFORNIA 93274
(559) 688-5263
www.laneengineers.com

AGENCY

FOURTH ST COMMUNITY CENTER AND PARK

HENDERSON AVE., PORTERVILLE, CA 93257

SITE DIMENSION AND HORIZONTAL CONTROL PLAN

NO.	REVISION	DATE
1	PLAN CHEK REVISION 1	5/17/24

PLAN CHECK REVISION 1

PROJECT MANAGER
LANCE WIERSCHEM

DRAWN BY W.V. | CHECKED BY A.P.O.

DATE 2024.01.15

PROJECT NUMBER 2883-01-RC22

SHEET CH101

LANE PROJECT NO. 22306

J:\Jobs\2022\22306\Dwg\Production Drawings\C2_Site Dimension Plan.dwg, CH101, Aug 30, 2024 1:05pm, wa

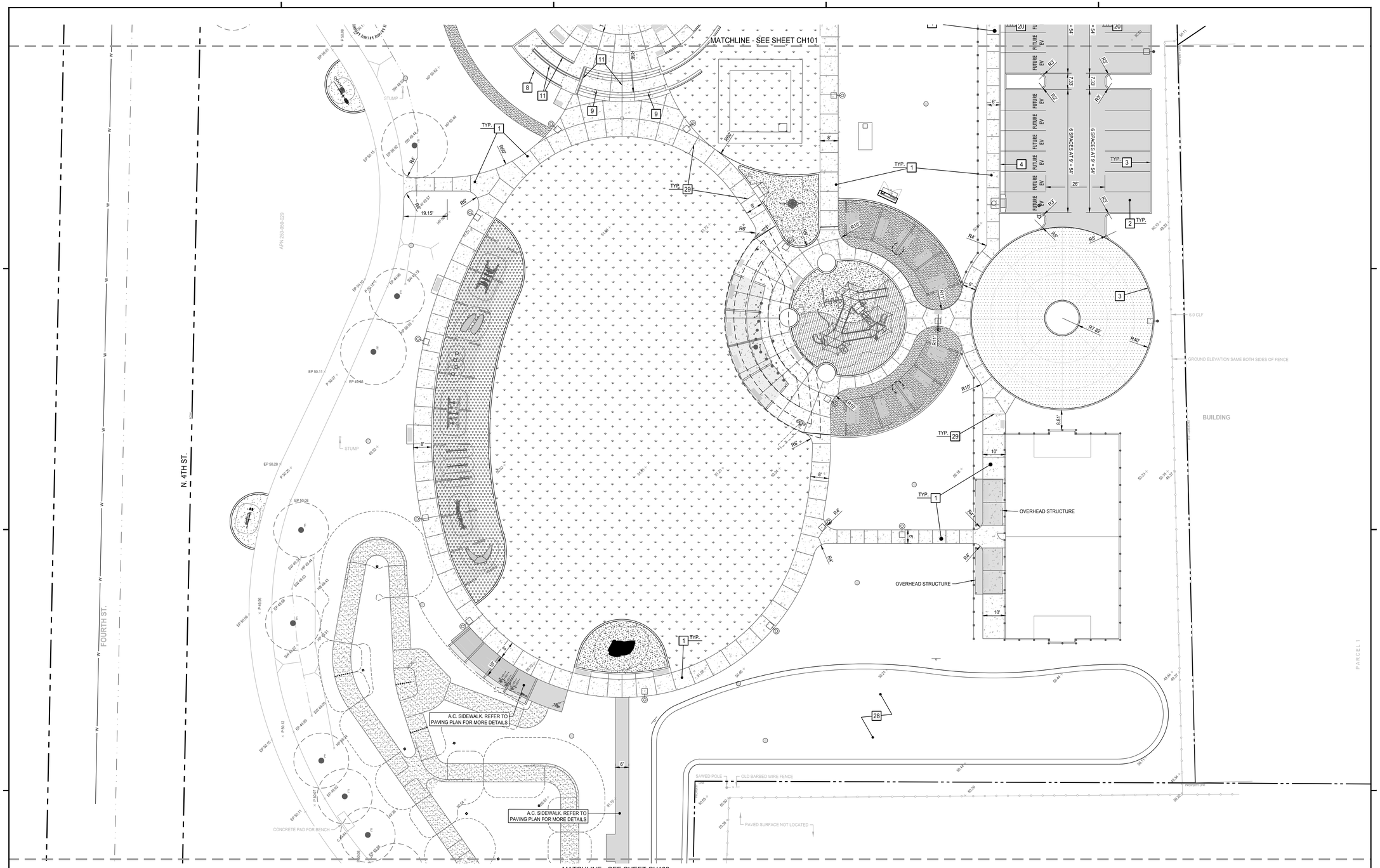

SITE NOTES

(SHEETS CH101 - CH103 ONLY)

1. REFER TO SHEETS C001 FOR BENCHMARKS, GENERAL NOTES, INFORMATION, AND SPECIFICATIONS.
2. CONTRACTOR SHALL VERIFY ALL BUILDING AND SITE DIMENSIONS WITH ARCHITECTURAL PLANS PRIOR TO CONSTRUCTION.
3. REFER TO ARCHITECTURAL, PLUMBING, MECHANICAL AND ELECTRICAL DWGS. FOR ADDITIONAL INFORMATION.
4. SEE WET PIPING PLAN FOR ALL DETAILS RELATED TO MANHOLES, CATCH BASINS AND ANY OTHER UTILITY INFRASTRUCTURE.
5. ALL DIMENSIONS SHOWN TO CURB ARE TO FACE OF CURB UNLESS SHOWN OR NOTED OTHERWISE.
6. SEE SHEETS CC101 & CC101 FOR OFF-SITE IMPROVEMENTS ON HENDERSON AVENUE & FOURTH STREET.

LEGEND

- NEW CONCRETE SIDEWALK, FLATWORK AND MISCELLANEOUS CONCRETE
- NEW CONCRETE PAVEMENT
- NEW ASPHALT PAVEMENT
- PROPERTY BOUNDARY

CONSTRUCTION KEYNOTES

(SHEETS CH101 - CH103 ONLY)

1. CONSTRUCT 4" THICK CONCRETE WALK WITH THICKENED EDGES, SEE DETAIL 24/CC501.
2. CONSTRUCT ASPHALT CONCRETE PAVEMENT, SEE PAVING PLANS SHEET CS101 - CS103.
3. CONSTRUCT CONCRETE BARRIER CURB. SEE DETAIL 12/CC501.
4. CONSTRUCT CONCRETE CURB & GUTTER CURB. SEE DETAIL 41/CC501.
5. CONSTRUCT ACCESSIBILITY RAMP. SEE DETAIL 12/CC502.
6. FURNISH & INSTALL DETECTABLE WARNING SURFACE, SEE DETAIL 13/CC502.
7. CONCRETE SEAT WALL, SEE LANDSCAPE CONSTRUCTION DWGS.
8. CONCRETE RAMP WALL, SEE LANDSCAPE CONSTRUCTION DWGS.
9. CONSTRUCT CONCRETE STEPS, SEE LANDSCAPE CONSTRUCTION DWGS.
10. CONSTRUCT ACCESSIBILITY RAMP. SEE DETAIL 14/CC502.
11. CONSTRUCT HANDRAILS, SEE LANDSCAPE CONSTRUCTION DWGS.
12. FURNISH & INSTALL ENERGY DISSIPATION DEVICE FOR ROOF DOWNSPOUTS. SEE DETAIL 13/CC503
13. CONSTRUCT PASSENGER DROP-OFF & LOADING ZONE. SEE DETAIL 33/CC502.
14. CONSTRUCT CONCRETE RAMP RETAINING CURB, SEE DETAIL 34/CC502.
15. INSTALL DIRECTIONAL PAVEMENT ARROW. SEE DETAIL 44/CC502.
16. INSTALL ACCESSIBLE PARKING EMBLEM MARKING. SEE DETAIL 31/CC502.
17. FURNISH & INSTALL ACCESSIBLE PARKING SIGN INCLUDING POST AND FOOTINGS. SEE DETAIL 32/CC502 (SIGN A)
18. FURNISH & INSTALL "VAN ACCESSIBLE" PARKING SIGN INCLUDING POST AND FOOTINGS. SEE DETAIL 32/CC502 (SIGN B).
19. FURNISH & INSTALL "UNAUTHORIZED" VEHICLE SIGN INCLUDING POST AND FOOTINGS. SEE DETAIL 42/CC502.
20. FURNISH & INSTALL 4" WIDE WHITE PARKING STRIPES, TYP., U.N.O.
21. FURNISH & INSTALL 4" WIDE BLUE PARKING STRIPE.
22. NEW ACCESS AISLE WITH "NO PARKING" MARKING IN WHITE COLOR. "NO PARKING" LETTERS SHALL BE 12" MINIMUM IN HEIGHT. DIAGONAL CROSS HATCH PATTERN SHALL BE WHITE PAINT 4" WIDE SPACED AT 36" O.C. MAX.
23. FURNISH & INSTALL 4" WIDE GREEN PARKING STRIPE FOR ELECTRIC VEHICLE PARKING SPACES.
24. FURNISH & INSTALL ELECTRIC VEHICLE CHARGING ONLY SIGN. PROVIDE ALL SIGN HARDWARE, POST & FOOTING FOR COMPLETE INSTALLATION. SEE DETAIL 14/CC503
25. FURNISH & INSTALL ELECTRIC VEHICLE CHARGING ONLY SIGN WITH ISA EMBLEM & VAN ACCESSIBLE. PROVIDE ALL SIGN HARDWARE, POST & FOOTING FOR COMPLETE INSTALLATION. SEE DETAIL 24/CC503.
26. FURNISH & INSTALL ELECTRIC VEHICLE CHARGING ONLY SIGN WITH ISA EMBLEM. PROVIDE ALL SIGN HARDWARE, POST & FOOTING FOR COMPLETE INSTALLATION. SEE DETAIL 31/CC503.
27. FURNISH & INSTALL 4" WIDE WHITE MARKING "EV CHARGING ONLY" AT ELECTRIC VEHICLE PARKING SPACES PER MUTCD FIG. 3B-108(CA). SEE DETAIL 32/CC503.
28. BIO RETENTION AREA, SEE DETAIL 34/CC503.
29. CONCRETE JOINTS, SEE DETAIL 24/CC501.

NORTH

GRAPHIC SCALE

20 0 10 20 40

1 INCH = 20 FT.

rrm design group
rrmdesign.com | (805) 543-1794
3765 SOUTH HIGUERA STREET, SUITE 102
SAN LUIS OBISPO, CA 93401

THE INCLUDED DRAWINGS, SPECIFICATIONS, IDEAS, DESIGNS AND ARRANGEMENTS REPRESENTED THEREBY ARE AND SHALL REMAIN THE PROPERTY OF RRM DESIGN GROUP AND NO PART THEREOF SHALL BE COPIED, DISCLOSED TO OTHERS OR USED IN CONNECTION WITH ANY WORK OR PROJECT OTHER THAN THE SPECIFIED PROJECT FOR WHICH THEY HAVE BEEN PREPARED AND DEVELOPED WITHOUT THE WRITTEN CONSENT OF RRM DESIGN GROUP. VISUAL CONTACT WITH THESE DRAWINGS OR OTHER PARTIES SHALL NOT CONSTITUTE DELIVERY. ANY DEVIATION FROM THESE RESTRICTIONS, SUBMITTAL OF THESE DOCUMENTS FOR PUBLIC AGENCY REVIEW SHALL NOT BE CONSIDERED A WAIVER OF RRM DESIGN GROUP'S RIGHTS.
RRM DESIGN GROUP COPYRIGHT 2023.
RRM IS A CALIFORNIA CORPORATION

REGISTERED PROFESSIONAL ENGINEER
WA VANG
No. RCE 86967
08/30/2024
CIVIL
STATE OF CALIFORNIA

CONSULTANT

LANE ENGINEERS INC.
CIVIL • STRUCTURAL • SURVEYING
979 N. BLACKSTONE STREET
TULARE, CALIFORNIA 93274
(559) 688-5263
www.laneengineers.com

AGENCY

FOURTH ST COMMUNITY CENTER AND PARK

HENDERSON AVE., PORTERVILLE, CA 93257

SITE DIMENSION AND HORIZONTAL CONTROL PLAN

NO.	REVISION	DATE
1	PLAN CHEK REVISION 1	5/17/24

PLAN CHECK REVISION 1

PROJECT MANAGER: LANCE WIERSCHEM
DRAWN BY: W.V.
CHECKED BY: A.P.O.
DATE: 2024.01.15
PROJECT NUMBER: 2883-01-RC22
SHEET: CH102

LANE PROJECT NO. 22306

J:\Jobs\2022\22306\Dwg\Production Drawings\C2_Site Dimension Plan.dwg, CH102, Aug 30, 2024 1:05pm, wa

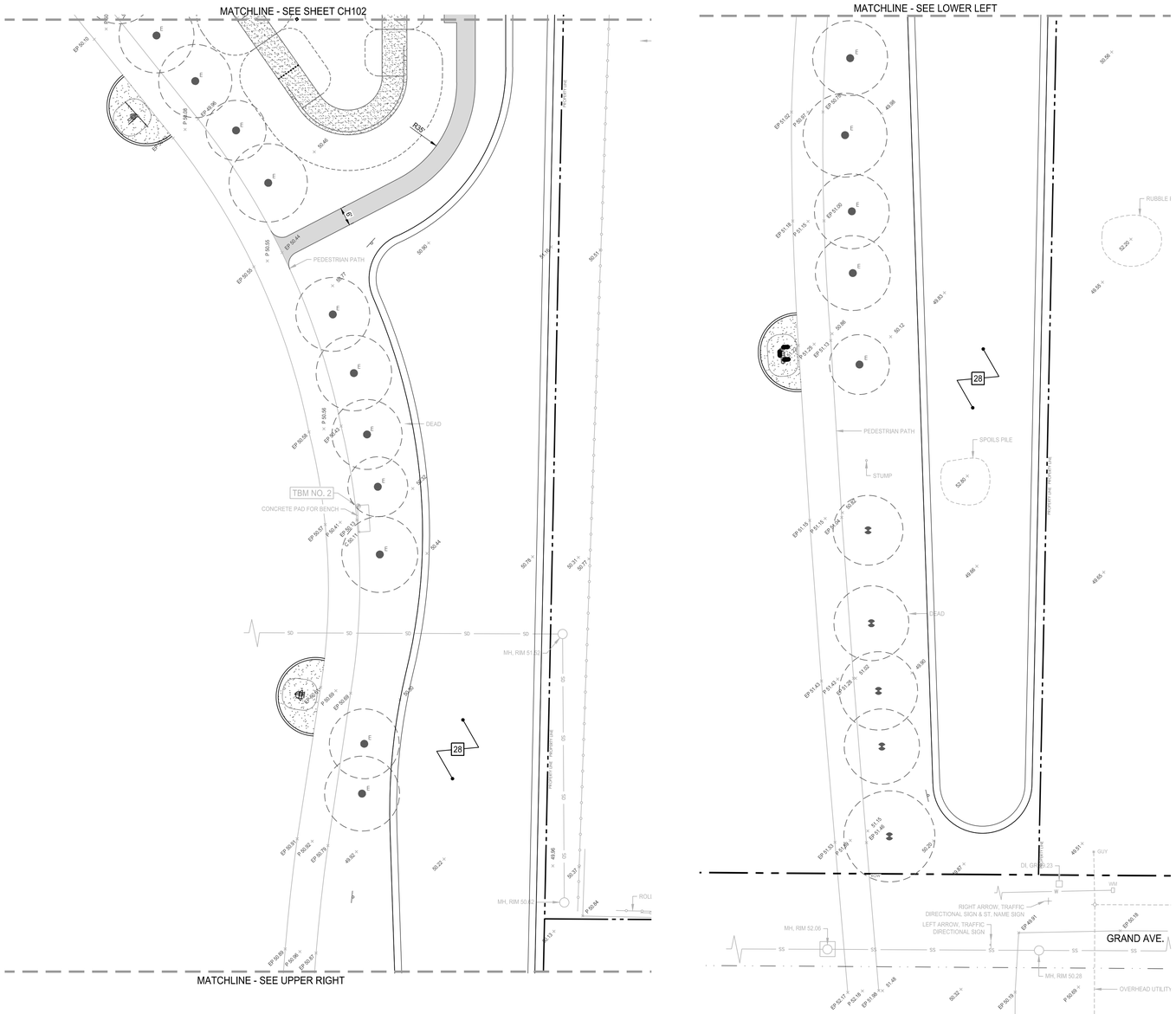

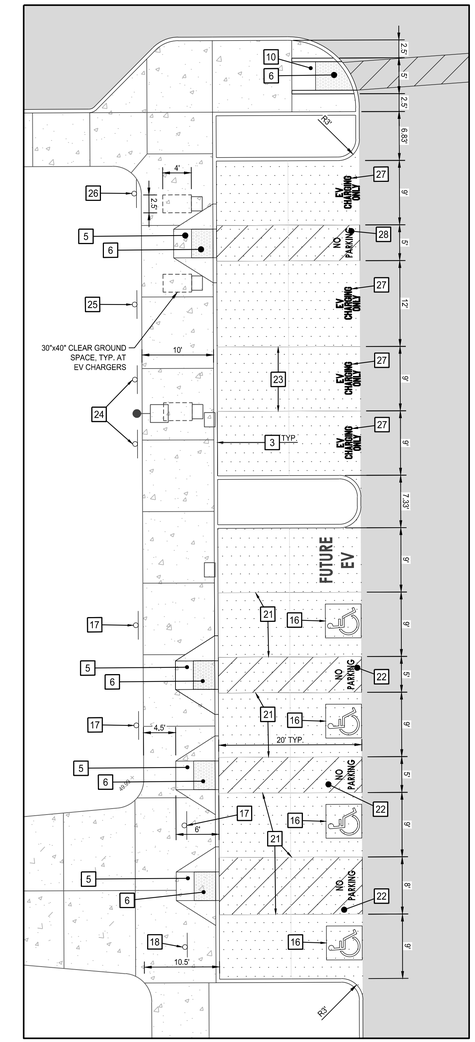

A ENLARGED SITE PLAN

SCALE: 1"=10'

NORTH

SITE NOTES

(SHEETS CH101 - CH103 ONLY)

1. REFER TO SHEETS C001 FOR BENCHMARKS, GENERAL NOTES, INFORMATION, AND SPECIFICATIONS.
2. CONTRACTOR SHALL VERIFY ALL BUILDING AND SITE DIMENSIONS WITH ARCHITECTURAL PLANS PRIOR TO CONSTRUCTION.
3. REFER TO ARCHITECTURAL, PLUMBING, MECHANICAL AND ELECTRICAL DWGS. FOR ADDITIONAL INFORMATION.
4. SEE WET PIPING PLAN FOR ALL DETAILS RELATED TO MANHOLES, CATCH BASINS AND ANY OTHER UTILITY INFRASTRUCTURE.
5. ALL DIMENSIONS SHOWN TO CURB ARE TO FACE OF CURB UNLESS SHOWN OR NOTED OTHERWISE.
6. SEE SHEETS CC101 & CC101 FOR OFF-SITE IMPROVEMENTS ON HENDERSON AVENUE & FOURTH STREET.

LEGEND

- NEW CONCRETE SIDEWALK, FLATWORK AND MISCELLANEOUS CONCRETE
- NEW CONCRETE PAVEMENT
- NEW ASPHALT PAVEMENT
- PROPERTY BOUNDARY

CONSTRUCTION KEYNOTES

(SHEETS CH101 - CH103 ONLY)

1. CONSTRUCT 4" THICK CONCRETE WALK WITH THICKENED EDGES, SEE DETAIL 24/CC501.
2. CONSTRUCT ASPHALT CONCRETE PAVEMENT, SEE PAVING PLANS SHEET CS101 - CS103.
3. CONSTRUCT CONCRETE BARRIER CURB. SEE DETAIL 12/CC501.
4. CONSTRUCT CONCRETE CURB & GUTTER CURB. SEE DETAIL 41/CC501.
5. CONSTRUCT ACCESSIBILITY RAMP. SEE DETAIL 12/CC502.
6. FURNISH & INSTALL DETECTABLE WARNING SURFACE, SEE DETAIL 13/CC502.
7. CONCRETE SEAT WALL, SEE LANDSCAPE CONSTRUCTION DWGS.
8. CONCRETE RAMP WALL, SEE LANDSCAPE CONSTRUCTION DWGS.
9. CONSTRUCT CONCRETE STEPS, SEE LANDSCAPE CONSTRUCTION DWGS.
10. CONSTRUCT ACCESSIBILITY RAMP. SEE DETAIL 14/CC502.
11. CONSTRUCT HANDRAILS, SEE LANDSCAPE CONSTRUCTION DWGS.
12. FURNISH & INSTALL ENERGY DISSIPATION DEVICE FOR ROOF DOWNSPOUTS. SEE DETAIL 13/CC503
13. CONSTRUCT PASSENGER DROP-OFF & LOADING ZONE. SEE DETAIL 33/CC502.
14. CONSTRUCT CONCRETE RAMP RETAINING CURB, SEE DETAIL 34/CC502.
15. INSTALL DIRECTIONAL PAVEMENT ARROW. SEE DETAIL 44/CC502.
16. INSTALL ACCESSIBLE PARKING EMBLEM MARKING. SEE DETAIL 31/CC502.
17. FURNISH & INSTALL ACCESSIBLE PARKING SIGN INCLUDING POST AND FOOTINGS. SEE DETAIL 32/CC502 (SIGN A)
18. FURNISH & INSTALL "VAN ACCESSIBLE" PARKING SIGN INCLUDING POST AND FOOTINGS. SEE DETAIL 32/CC502 (SIGN B).
19. FURNISH & INSTALL "UNAUTHORIZED" VEHICLE SIGN INCLUDING POST AND FOOTINGS. SEE DETAIL 42/CC502.
20. FURNISH & INSTALL 4" WIDE WHITE PARKING STRIPES, TYP., U.N.O.
21. FURNISH & INSTALL 4" WIDE BLUE PARKING STRIPE.
22. NEW ACCESS AISLE WITH "NO PARKING" MARKING IN WHITE COLOR. "NO PARKING" LETTERS SHALL BE 12" MINIMUM IN HEIGHT. DIAGONAL CROSS HATCH PATTERN SHALL BE WHITE PAINT 4" WIDE SPACED AT 36" O.C. MAX.
23. FURNISH & INSTALL 4" WIDE GREEN PARKING STRIPE FOR ELECTRIC VEHICLE PARKING SPACES.
24. FURNISH & INSTALL ELECTRIC VEHICLE CHARGING ONLY SIGN. PROVIDE ALL SIGN HARDWARE, POST & FOOTING FOR COMPLETE INSTALLATION. SEE DETAIL 14/CC503
25. FURNISH & INSTALL ELECTRIC VEHICLE CHARGING ONLY SIGN WITH ISA EMBLEM & VAN ACCESSIBLE . PROVIDE ALL SIGN HARDWARE, POST & FOOTING FOR COMPLETE INSTALLATION. SEE DETAIL 24/CC503.
26. FURNISH & INSTALL ELECTRIC VEHICLE CHARGING ONLY SIGN WITH ISA EMBLEM. PROVIDE ALL SIGN HARDWARE, POST & FOOTING FOR COMPLETE INSTALLATION. SEE DETAIL 31/CC503.
27. FURNISH & INSTALL 4" WIDE WHITE MARKING "EV CHARGING ONLY" AT ELECTRIC VEHICLE PARKING SPACES PER MUTCD FIG. 3B-108(CA). SEE DETAIL 32/CC503.
28. BIO RETENTION AREA, SEE DETAIL 34/CC503.
29. CONCRETE JOINTS, SEE DETAIL 24/CC501.

NORTH

GRAPHIC SCALE

20 0 10 20 40

1 INCH = 20 FT.

rrm design group

rrmdesign.com | (805) 543-1794

3765 SOUTH HIGUERA STREET, SUITE 102

SAN LUIS OBISPO, CA 93401

THE INCLUDED DRAWINGS, SPECIFICATIONS, IDEAS, DESIGNS AND ARRANGEMENTS REPRESENTED THEREBY ARE AND SHALL REMAIN THE PROPERTY OF RRM DESIGN GROUP AND NO PART THEREOF SHALL BE COPIED, DISCLOSED TO OTHERS OR USED IN CONNECTION WITH ANY WORK OR PROJECT OTHER THAN THE SPECIFIED PROJECT FOR WHICH THEY HAVE BEEN PREPARED AND DEVELOPED WITHOUT THE WRITTEN CONSENT OF RRM DESIGN GROUP. VISUAL CONTACT WITH THESE DRAWINGS OR OTHER PLANS AND SPECIFICATIONS SHALL CONSTITUTE PROOF OF ACCEPTANCE OF RESTRICTIONS. SUBMITTAL OF THESE DOCUMENTS FOR PUBLIC AGENCY REVIEW SHALL NOT BE CONSIDERED A WAIVER OF RRM DESIGN GROUP'S RIGHTS.

RRM DESIGN GROUP COPYRIGHT 2023.

RRM IS A CALIFORNIA CORPORATION

REGISTERED PROFESSIONAL ENGINEER — W. VANG — C. ELEC. 80967 — 08/30/2024 — CIVIL — STATE OF CALIFORNIA

CONSULTANT

LANE ENGINEERS INC.

CIVIL • STRUCTURAL • SURVEYING

979 N. BLACKSTONE STREET

TULARE, CALIFORNIA 93274

(559) 688-5263

www.laneengineers.com

AGENCY

FOURTH ST COMMUNITY CENTER AND PARK

HENDERSON AVE., PORTERVILLE, CA 93257

SITE DIMENSION AND HORIZONTAL CONTROL PLAN

NO.	REVISION	DATE
1	PLAN CHEK REVISION 1	5/17/24

PROJECT MANAGER: LANCE WIERSCHEM

DRAWN BY: W.V. | CHECKED BY: A.P.O.

DATE: 2024.01.15

PROJECT NUMBER: 2883-01-RC22

SHEET: CH103

PLAN CHECK REVISION 1

LANE PROJECT NO. 22306

J:\Jobs\2022\22306\Dwg\Production Drawings\C2_Site Dimension Plan.dwg, CH103, Aug 30, 2024 1:06pm, wa

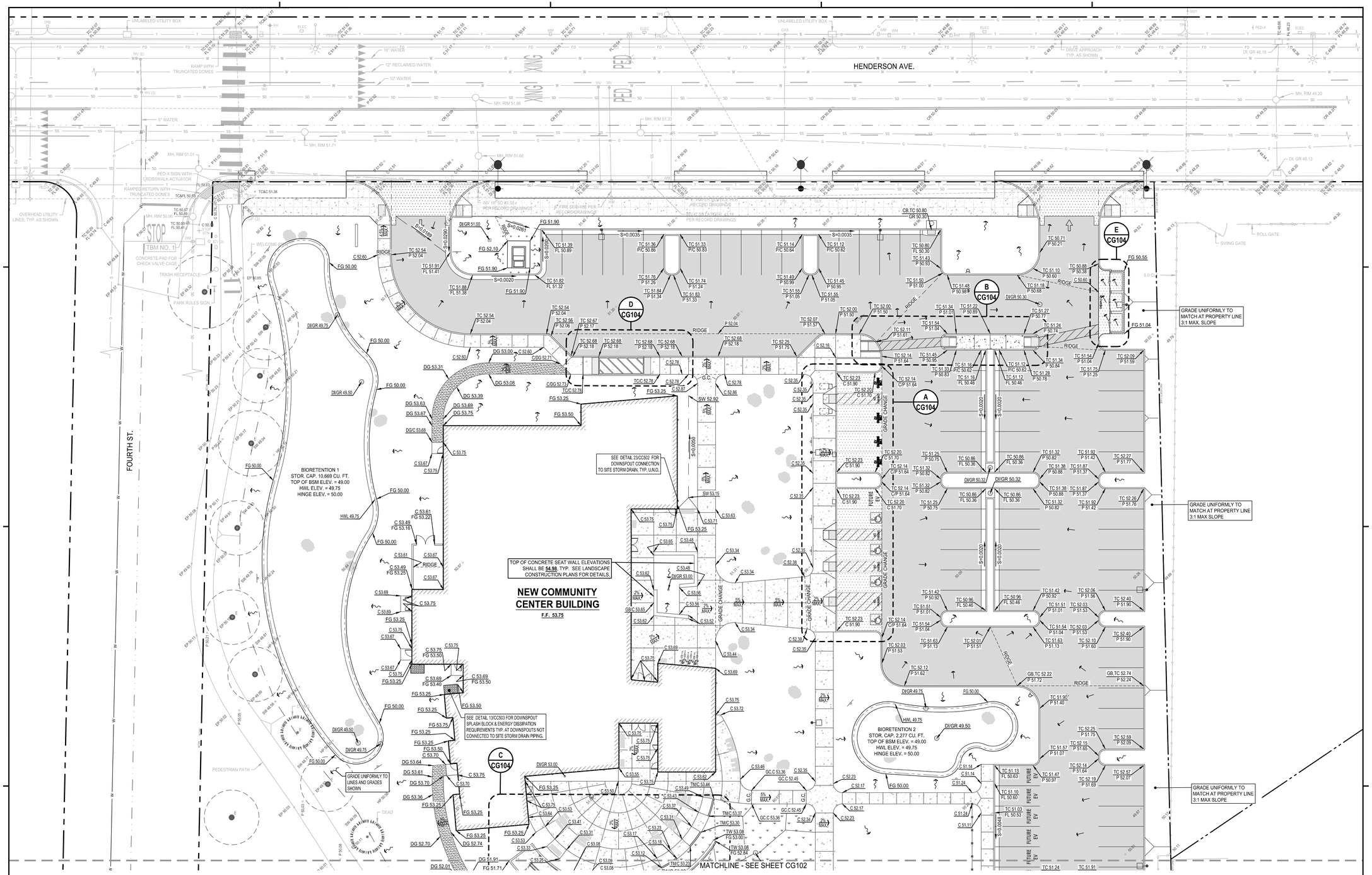

NOTES

1. REFER TO SHEET C001 FOR BENCHMARKS, GENERAL NOTES & INFORMATION.
2. FINISH PAVEMENT ELEVATION IS 0.5' BELOW TOP OF BARRIER/LANDSCAPE CURB IN THE PARKING LOT AREA UNLESS SHOWN OR NOTED OTHERWISE.
3. UNLESS SHOWN OR NOTED OTHERWISE, WHERE FINISH GRADE ABUTS CONCRETE FLATWORK/PAVEMENT/BACK OF CURBS, FINISHED GRADE ELEVATION SHALL BE 1 INCH LOWER THAN ADJACENT CONCRETE IN SHRUB AREAS AND $\frac{1}{2}$ INCH LOWER IN TURF AREAS.
4. REFER TO ARCH DWGS. FOR ADDITIONAL SITE INFORMATION AND DETAILS.
5. SLOPES AT ACCESSIBLE PARKING SPACES SHALL NOT EXCEED 2.0% IN ANY DIRECTION. CONTRACTOR SHALL GRADE PER GRADE LABELS SHOWN.
6. CROSS-SLOPES AT SIDEWALKS SHALL NOT EXCEED 1.5%. CONTRACTOR SHALL GRADE PER GRADE LABELS SHOWN.
7. ALL SITE PREPARATION AND EARTHWORK SHALL BE PERFORMED IN ACCORDANCE WITH THE PROJECT SPECIFICATIONS AND THE NOTES ON THIS SHEET.
8. FIELD VERIFY ALL ELEVATIONS SHOWN WHERE PROPOSED IMPROVEMENTS ABUT EXISTING IMPROVEMENTS. IMMEDIATELY NOTIFY PROJECT ARCHITECT OF ANY DISCREPANCIES.

LEGEND

- NEW CONCRETE SIDEWALK, FLATWORK AND MISCELLANEOUS CONCRETE
- NEW CONCRETE PAVEMENT
- NEW ASPHALT PAVEMENT
- PROPERTY BOUNDARY

NORTH

GRAPHIC SCALE

20 0 10 20 40

1 INCH = 20 FT.

rrm design group
rrmdesign.com | (805) 543-1794
3765 SOUTH HIGUERA STREET, SUITE 102
SAN LUIS OBISPO, CA 93401

THE INCLUDED DRAWINGS, SPECIFICATIONS, IDEAS, DESIGNS AND ARRANGEMENTS REPRESENTED THEREIN ARE AND SHALL REMAIN THE PROPERTY OF RRM DESIGN GROUP AND NO PART THEREOF SHALL BE COPIED, DISCLOSED TO OTHERS OR USED IN CONNECTION WITH ANY WORK OR PROJECT OTHER THAN THE SPECIFIED PROJECT FOR WHICH THEY HAVE BEEN PREPARED AND DEVELOPED WITHOUT THE WRITTEN CONSENT OF RRM DESIGN GROUP. VISUAL CONTACT WITH THESE DRAWINGS OR SPECIFICATIONS SHALL CONSTITUTE PROOF OF ACCEPTANCE OF THE ABOVE RESTRICTIONS. SUBMITTAL OF THESE DOCUMENTS FOR PUBLIC AGENCY REVIEW SHALL NOT BE CONSIDERED A WAIVER OF RRM DESIGN GROUP'S RIGHTS.
RRM DESIGN GROUP COPYRIGHT 2023.
RRM IS A CALIFORNIA CORPORATION

REGISTERED PROFESSIONAL ENGINEER
WA VANG
C064296
08/30/2024
CIVIL
STATE OF CALIFORNIA

CONSULTANT

LANE ENGINEERS INC.
CIVIL • STRUCTURAL • SURVEYING
979 N. BLACKSTONE STREET
TULARE, CALIFORNIA 93274
(559) 688-5263
www.laneengineers.com

AGENCY

FOURTH ST COMMUNITY CENTER AND PARK

HENDERSON AVE., PORTERVILLE, CA 93257

GRADING AND DRAINAGE PLAN

NO.	REVISION	DATE
1	PLAN CHEK REVISION 1	5/17/24

PLAN CHECK REVISION 1

PROJECT MANAGER
LANCE WIERSCHEM

DRAWN BY	CHECKED BY
W.V.	A.P.O.

DATE
2024.01.15

PROJECT NUMBER
2883-01-RC22

SHEET
CG101

LANE PROJECT NO. 22306

J:\Jobs\2022\22306\Dwg\Production Drawings\C3_Grading.dwg, CG101, Aug 30, 2024 1:07pm, wa

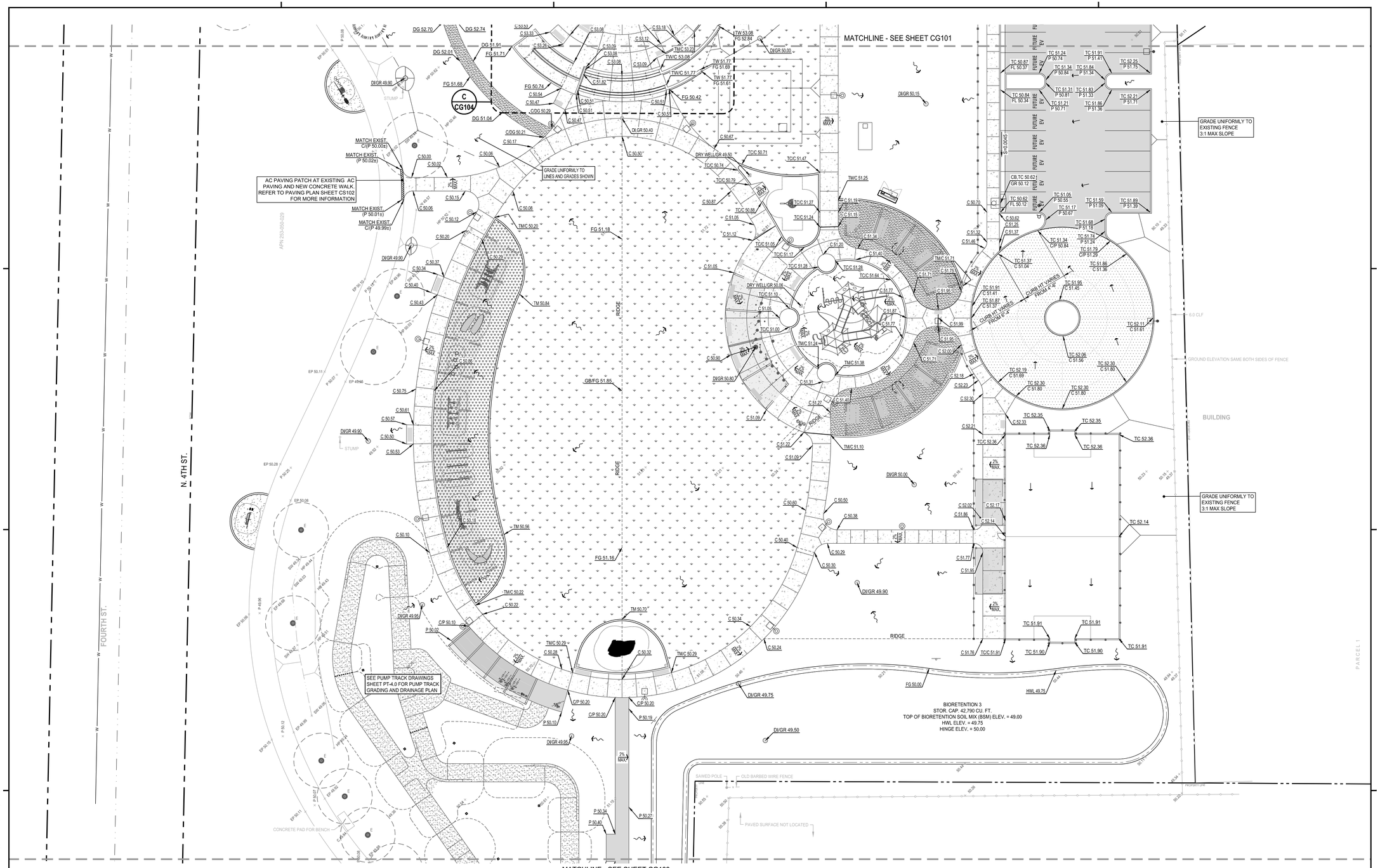

NOTES

1. REFER TO SHEET C001 FOR BENCHMARKS, GENERAL NOTES & INFORMATION.
2. FINISH PAVEMENT ELEVATION IS 0.5' BELOW TOP OF BARRIER/LANDSCAPE CURB IN THE PARKING LOT AREA UNLESS SHOWN OR NOTED OTHERWISE.
3. UNLESS SHOWN OR NOTED OTHERWISE, WHERE FINISH GRADE ABUTS CONCRETE FLATWORK/PAVEMENT/BACK OF CURBS, FINISHED GRADE ELEVATION SHALL BE 1 INCH LOWER THAN ADJACENT CONCRETE IN SHRUB AREAS AND ½ INCH LOWER IN TURF AREAS.
4. REFER TO ARCH DWGS. FOR ADDITIONAL SITE INFORMATION AND DETAILS.
5. SLOPES AT ACCESSIBLE PARKING SPACES SHALL NOT EXCEED 2.0% IN ANY DIRECTION. CONTRACTOR SHALL GRADE PER GRADE LABELS SHOWN.
6. CROSS-SLOPES AT SIDEWALKS SHALL NOT EXCEED 1.5%. CONTRACTOR SHALL GRADE PER GRADE LABELS SHOWN.
7. ALL SITE PREPARATION AND EARTHWORK SHALL BE PERFORMED IN ACCORDANCE WITH THE PROJECT SPECIFICATIONS AND THE NOTES ON THIS SHEET.
8. FIELD VERIFY ALL ELEVATIONS SHOWN WHERE PROPOSED IMPROVEMENTS ABUT EXISTING IMPROVEMENTS. IMMEDIATELY NOTIFY PROJECT ARCHITECT OF ANY DISCREPANCIES.

LEGEND

- NEW CONCRETE SIDEWALK, FLATWORK AND MISCELLANEOUS CONCRETE
- NEW CONCRETE PAVEMENT
- NEW ASPHALT PAVEMENT
- PROPERTY BOUNDARY

NORTH

GRAPHIC SCALE

20 0 10 20 40

1 INCH = 20 FT.

rrm design group
rrmdesign.com | (805) 543-1794
3765 SOUTH HIGUERA STREET, SUITE 102
SAN LUIS OBISPO, CA 93401

THE INCLUDED DRAWINGS, SPECIFICATIONS, IDEAS, DESIGNS AND ARRANGEMENTS REPRESENTED THEREBY ARE AND SHALL REMAIN THE PROPERTY OF RRM DESIGN GROUP AND NO PART THEREOF SHALL BE COPIED, DISCLOSED TO OTHERS OR USED IN CONNECTION WITH ANY WORK OR PROJECT OTHER THAN THE SPECIFIC PROJECT FOR WHICH THEY HAVE BEEN PREPARED AND DEVELOPED WITHOUT THE WRITTEN CONSENT OF RRM DESIGN GROUP. VISUAL CONTACT WITH THESE DRAWINGS OR SPECIFICATIONS SHALL CONSTITUTE PROOF OF SUBSCRIPTION TO THE RESTRICTIONS. SUBMITTAL OF THESE DOCUMENTS FOR PUBLIC AGENCY REVIEW SHALL NOT BE CONSIDERED A WAIVER OF RRM DESIGN GROUP'S RIGHTS.
RRM DESIGN GROUP COPYRIGHT 2023.
RRM IS A CALIFORNIA CORPORATION

REGISTERED PROFESSIONAL ENGINEER
WA VANG
C064E 86967
08/30/2024
CIVIL
STATE OF CALIFORNIA

CONSULTANT

LANE ENGINEERS INC.
CIVIL • STRUCTURAL • SURVEYING
979 N. BLACKSTONE STREET
TULARE, CALIFORNIA 93274
(559) 688-5263
www.laneengineers.com

AGENCY

FOURTH ST COMMUNITY CENTER AND PARK

HENDERSON AVE., PORTERVILLE, CA 93257

GRADING AND DRAINAGE PLAN

NO.	REVISION	DATE
1	PLAN CHEK REVISION 1	5/17/24

PROJECT MANAGER
LANCE WIERSCHEM

DRAWN BY	CHECKED BY
W.V.	A.P.O.

DATE
2024.01.15

PROJECT NUMBER
2883-01-RC22

SHEET
CG102

PLAN CHECK REVISION 1

LANE PROJECT NO. 22306

J:\Jobs\2022\22306\Dwg\Production Drawings\C3_Grading.dwg, CG102, Aug 30, 2024 1:07pm, wa

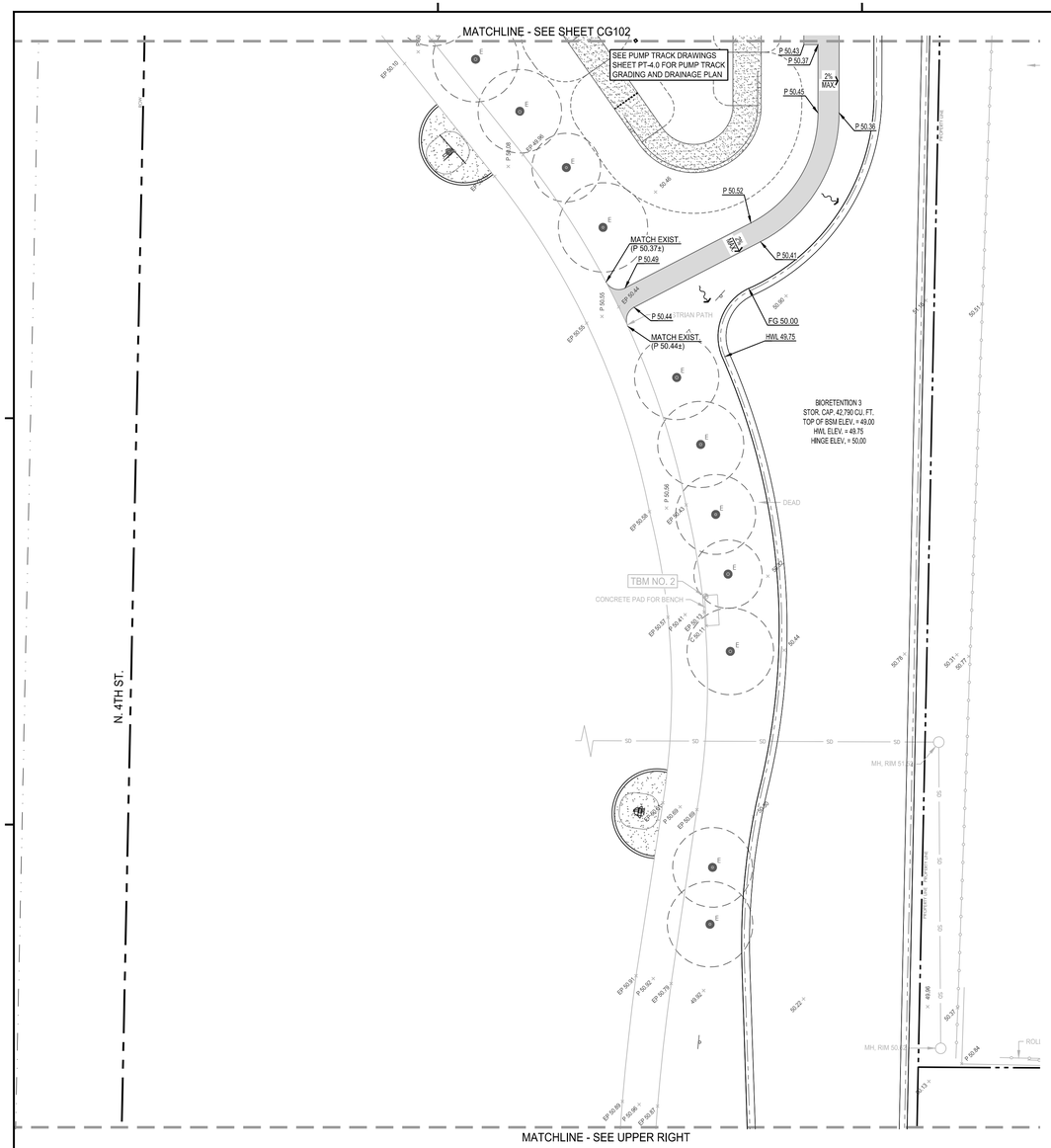

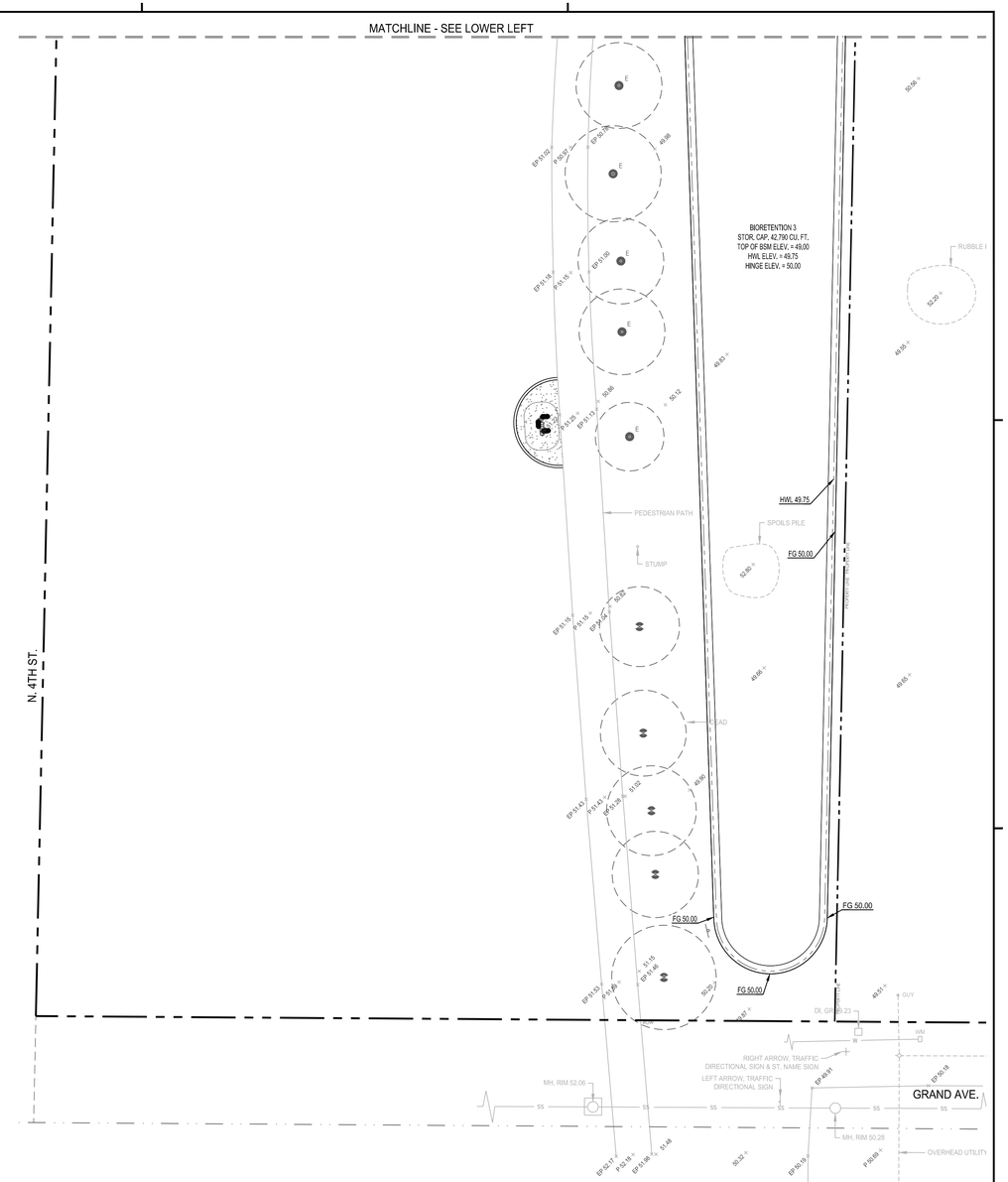

NOTES

1. REFER TO SHEET C001 FOR BENCHMARKS, GENERAL NOTES & INFORMATION.
2. FINISH PAVEMENT ELEVATION IS 0.5' BELOW TOP OF BARRIER/LANDSCAPE CURB IN THE PARKING LOT AREA UNLESS SHOWN OR NOTED OTHERWISE.
3. UNLESS SHOWN OR NOTED OTHERWISE, WHERE FINISH GRADE ABUTS CONCRETE FLATWORK/PAVEMENT/BACK OF CURBS, FINISHED GRADE ELEVATION SHALL BE 1 INCH LOWER THAN ADJACENT CONCRETE IN SHRUB AREAS AND $\frac{1}{2}$ INCH LOWER IN TURF AREAS.
4. REFER TO ARCH DWGS. FOR ADDITIONAL SITE INFORMATION AND DETAILS.
5. SLOPES AT ACCESSIBLE PARKING SPACES SHALL NOT EXCEED 2.0% IN ANY DIRECTION. CONTRACTOR SHALL GRADE PER GRADE LABELS SHOWN.
6. CROSS-SLOPES AT SIDEWALKS SHALL NOT EXCEED 1.5%. CONTRACTOR SHALL GRADE PER GRADE LABELS SHOWN.
7. ALL SITE PREPARATION AND EARTHWORK SHALL BE PERFORMED IN ACCORDANCE WITH THE PROJECT SPECIFICATIONS AND THE NOTES ON THS SHEET.
8. FIELD VERIFY ALL ELEVATIONS SHOWN WHERE PROPOSED IMPROVEMENTS ABUT EXISTING IMPROVEMENTS. IMMEDIATELY NOTIFY PROJECT ARCHITECT OF ANY DISCREPANCIES.

LEGEND

- NEW CONCRETE SIDEWALK, FLATWORK AND MISCELLANEOUS CONCRETE
- NEW CONCRETE PAVEMENT
- NEW ASPHALT PAVEMENT
- PROPERTY BOUNDARY

NORTH

GRAPHIC SCALE

20 0 10 20 40

1 INCH = 20 FT.

rrm design group
rrmdesign.com | (805) 543-1794
3765 SOUTH HIGUERA STREET, SUITE 102
SAN LUIS OBISPO, CA 93401

THE INCLUDED DRAWINGS, SPECIFICATIONS, IDEAS, DESIGNS AND ARRANGEMENTS REPRESENTED THEREBY ARE AND SHALL REMAIN THE PROPERTY OF RRM DESIGN GROUP AND NO PART THEREOF SHALL BE COPIED, DISCLOSED TO OTHERS OR USED IN CONNECTION WITH ANY WORK OR PROJECT OTHER THAN THE SPECIFIED PROJECT FOR WHICH THEY HAVE BEEN PREPARED AND DEVELOPED WITHOUT THE WRITTEN CONSENT OF RRM DESIGN GROUP. VISUAL CONTACT WITH THESE DRAWINGS OR OTHERWISE RECEIVING THEM SHALL CONSTITUTE ACCEPTANCE OF THE ABOVE RESTRICTIONS. SUBMITTAL OF THESE DOCUMENTS FOR PUBLIC AGENCY REVIEW SHALL NOT BE CONSIDERED A WAIVER OF RRM DESIGN GROUP'S RIGHTS.
RRM DESIGN GROUP COPYRIGHT 2023.
RRM IS A CALIFORNIA CORPORATION

REGISTERED PROFESSIONAL ENGINEER
WA VANG
No. C 80967
08/30/2024
CIVIL
STATE OF CALIFORNIA

CONSULTANT

LANE ENGINEERS INC.
CIVIL • STRUCTURAL • SURVEYING
979 N. BLACKSTONE STREET
TULARE, CALIFORNIA 93274
(559) 688-5263
www.laneengineers.com

AGENCY

FOURTH ST COMMUNITY CENTER AND PARK

HENDERSON AVE., PORTERVILLE, CA 93257

GRADING AND DRAINAGE PLAN

NO.	REVISION	DATE
1	PLAN CHEK REVISION 1	5/17/24

PLAN CHECK REVISION 1

PROJECT MANAGER: LANCE WIERSCHEM

DRAWN BY	CHECKED BY
W.V.	A.P.O.

DATE: 2024.01.15

PROJECT NUMBER: 2883-01-RC22

SHEET: CG103

LANE PROJECT NO. 22306

J:\Jobs\2022\22306\Dwg\Production Drawings\C3_Grading.dwg, CG103, Aug 30, 2024 1:08pm, wa

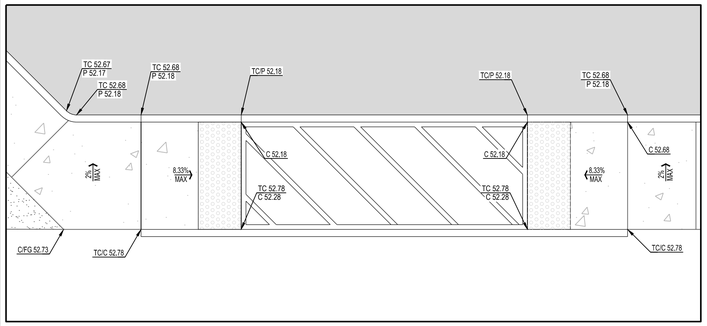

(D) ENLARGED GRADING PLAN

SCALE: 1"=5'

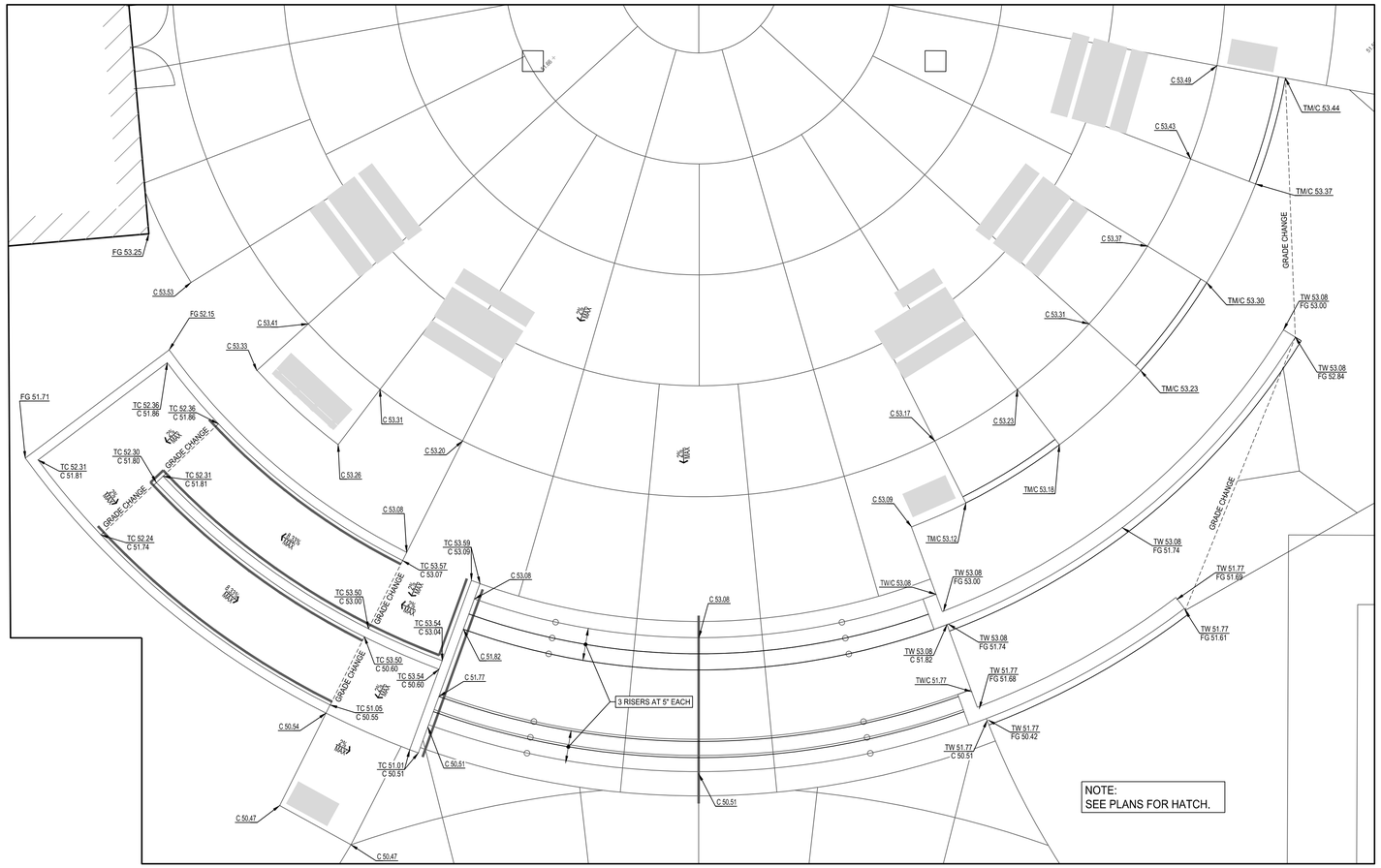

(C) ENLARGED GRADING PLAN

SCALE: 1"=5'

NORTH

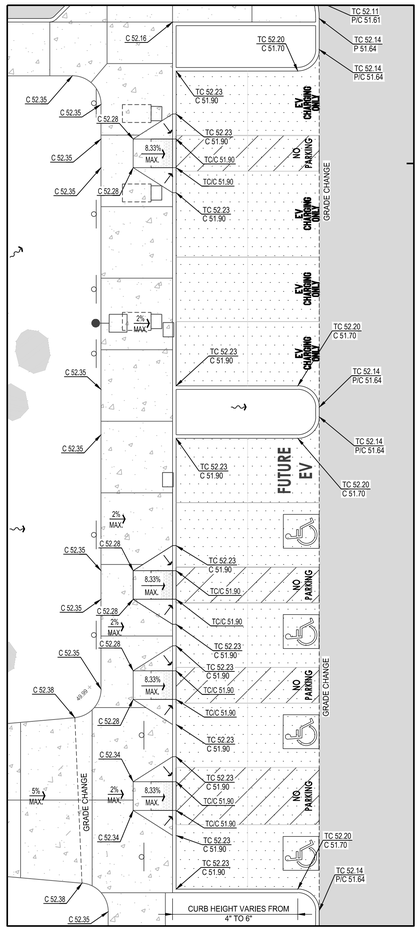

(A) ENLARGED GRADING PLAN

SCALE: 1"=10'

NORTH

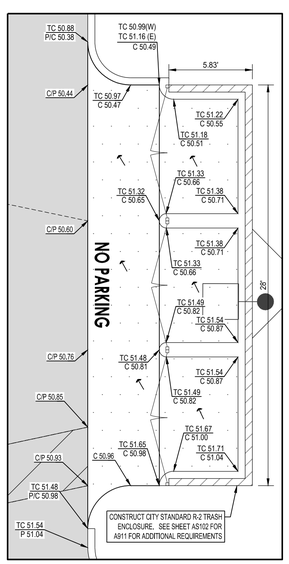

(E) ENLARGED GRADING PLAN

SCALE: 1"=5'

NORTH

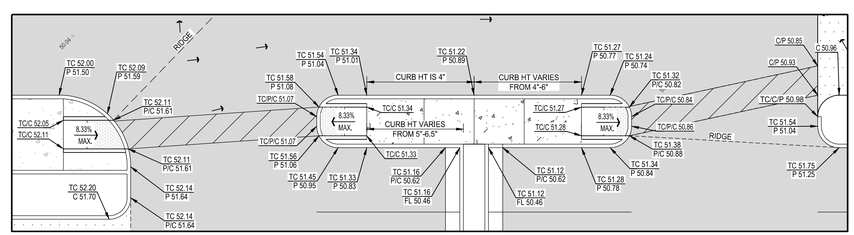

(B) ENLARGED GRADING PLAN

SCALE: 1"=10'

NORTH

NOTES

1. REFER TO SHEET C001 FOR BENCHMARKS, GENERAL NOTES & INFORMATION.
2. FINISH PAVEMENT ELEVATION IS 0.5' BELOW TOP OF BARRIER/LANDSCAPE CURB IN THE PARKING LOT AREA UNLESS SHOWN OR NOTED OTHERWISE.
3. UNLESS SHOWN OR NOTED OTHERWISE, WHERE FINISH GRADE ABUTS CONCRETE FLATWORK/PAVEMENT/BACK OF CURBS, FINISHED GRADE ELEVATION SHALL BE 1 INCH LOWER THAN ADJACENT CONCRETE IN SHRUB AREAS AND $\frac{1}{2}$ INCH LOWER IN TURF AREAS.
4. REFER TO ARCH DWGS. FOR ADDITIONAL SITE INFORMATION AND DETAILS.
5. SLOPES AT ACCESSIBLE PARKING SPACES SHALL NOT EXCEED 2.0% IN ANY DIRECTION. CONTRACTOR SHALL GRADE PER GRADE LABELS SHOWN.
6. CROSS-SLOPES AT SIDEWALKS SHALL NOT EXCEED 1.5%. CONTRACTOR SHALL GRADE PER GRADE LABELS SHOWN.
7. ALL SITE PREPARATION AND EARTHWORK SHALL BE PERFORMED IN ACCORDANCE WITH THE PROJECT SPECIFICATIONS AND THE NOTES ON THIS SHEET.
8. FIELD VERIFY ALL ELEVATIONS SHOWN WHERE PROPOSED IMPROVEMENTS ABUT EXISTING IMPROVEMENTS. IMMEDIATELY NOTIFY PROJECT ARCHITECT OF ANY DISCREPANCIES.

LEGEND

- NEW CONCRETE SIDEWALK, FLATWORK AND MISCELLANEOUS CONCRETE
- NEW CONCRETE PAVEMENT
- NEW ASPHALT PAVEMENT
- PROPERTY BOUNDARY

rrm design group
rrmdesign.com | (805) 543-1794
3765 SOUTH HIGUERA STREET, SUITE 102
SAN LUIS OBISPO, CA 93401

THE INCLUDED DRAWINGS, SPECIFICATIONS, IDEAS, DESIGNS AND ARRANGEMENTS REPRESENTED THEREBY ARE AND SHALL REMAIN THE PROPERTY OF RRM DESIGN GROUP AND NO PART THEREOF SHALL BE COPIED, DISCLOSED TO OTHERS OR USED IN CONNECTION WITH ANY WORK OR PROJECT OTHER THAN THE SPECIFIED PROJECT FOR WHICH THEY HAVE BEEN PREPARED AND DEVELOPED WITHOUT THE WRITTEN CONSENT OF RRM DESIGN GROUP. VISUAL CONTACT WITH THESE DRAWINGS OR OTHER PROJECT DOCUMENTS SHALL CONSTITUTE PROOF OF ACCEPTANCE OF THE RESTRICTIONS. SUBMITTAL OF THESE DOCUMENTS FOR PUBLIC AGENCY REVIEW SHALL NOT BE CONSIDERED A WAIVER OF RRM DESIGN GROUP'S RIGHTS.
RRM DESIGN GROUP COPYRIGHT 2023.
RRM IS A CALIFORNIA CORPORATION

REGISTERED PROFESSIONAL ENGINEER
WA VANG
RCE: 80967
08/30/2024
CIVIL
STATE OF CALIFORNIA

CONSULTANT

LANE ENGINEERS INC.
CIVIL • STRUCTURAL • SURVEYING
979 N. BLACKSTONE STREET
TULARE, CALIFORNIA 93274
(559) 688-5263
www.laneengineers.com

AGENCY

FOURTH ST COMMUNITY CENTER AND PARK

HENDERSON AVE., PORTERVILLE, CA 93257

GRADING AND DRAINAGE PLAN

NO.	REVISION	DATE
1	PLAN CHEK REVISION 1	5/17/24

PLAN CHECK REVISION 1

PROJECT MANAGER: LANCE WIERSCHEM
DRAWN BY: W.V.
CHECKED BY: A.P.O.
DATE: 2024.01.15
PROJECT NUMBER: 2883-01-RC22
SHEET: CG104

LANE PROJECT NO. 22306

J:\Jobs\2022\22306\Dwg\Production Drawings\C3_Grading.dwg, CG104, Aug 30, 2024 1:08pm, wa

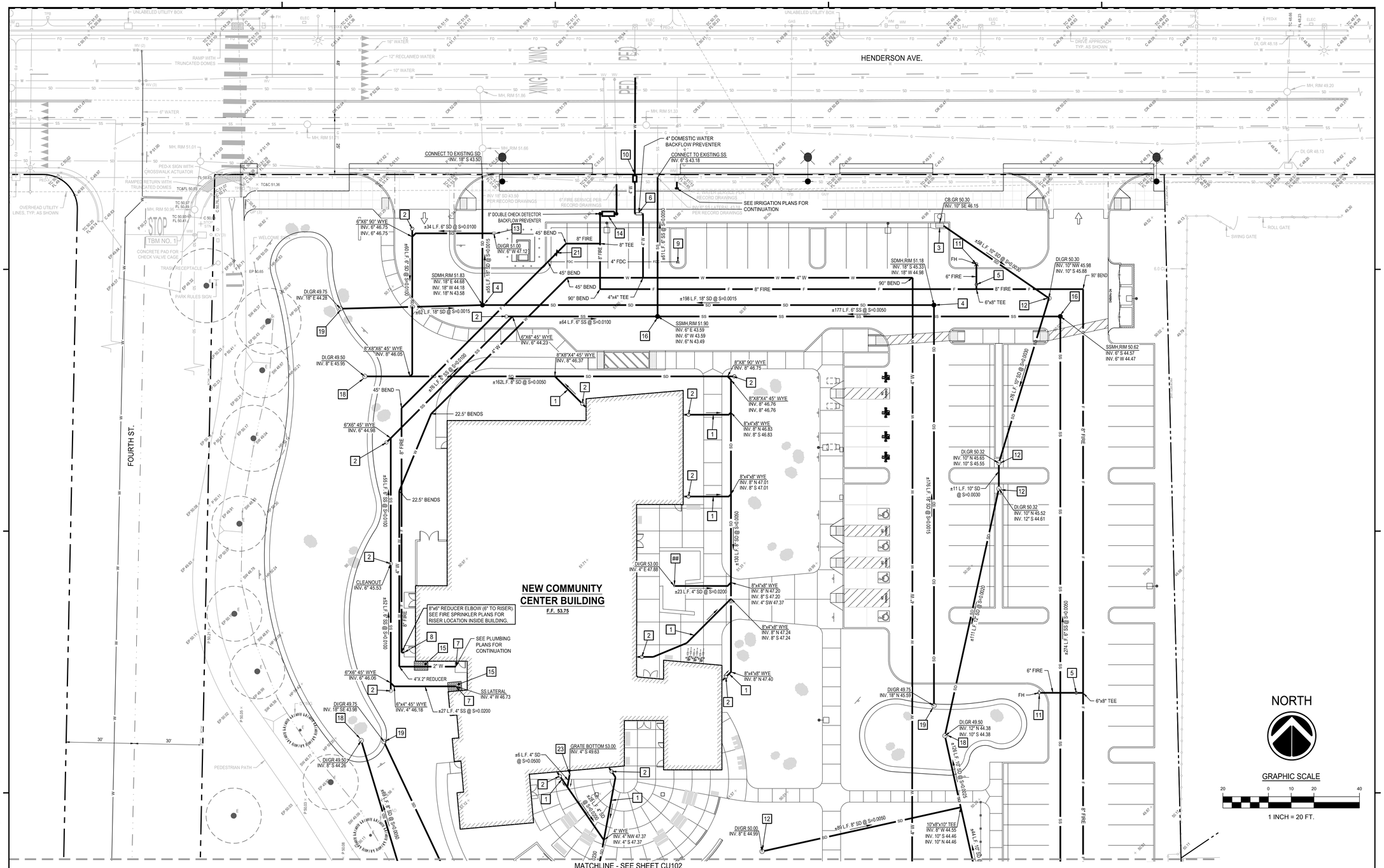

WET PIPING NOTES

(SHEETS CU101 - CU103)

1. REFER TO SHEETS C001 FOR BENCHMARKS, GENERAL NOTES, INFORMATION, AND SPECIFICATIONS.
2. ADD 400.00 FEET TO ELEVATIONS SHOWN ON PLAN TO OBTAIN DATUM BASED ON NORTH AMERICAN VERTICAL DATUM 1988 (NAVD 1988).
3. CONTRACTOR SHALL VERIFY ALL SIZES OF WATER PIPING SHOWN ON THIS DRAWING PRIOR TO INSTALLING ANY NEW PIPE.
4. WATER LATERAL PIPING SHALL BE A MINIMUM OF 12" CLEAR ABOVE AND 18" CLEAR HORIZONTALLY FROM SANITARY SEWER FOR PARALLEL INSTALLATIONS. AT CROSSINGS WATER SHALL BE ABOVE THE SANITARY SEWER WITH A 12" MINIMUM CLEARANCE.
5. ALL ONSITE TRENCHES SHALL BE BACKFILLED PER DETAIL 13/CC501.
6. EXTEND SITE UTILITIES TO WITHIN 5' OF BUILDING UNLESS SHOWN OR NOTED OTHERWISE.
7. SEE LANDSCAPE DRAWINGS FOR ALL IRRIGATION LINES AND SLEEVE LOCATIONS.
8. DUE TO THE SCALE OF THE DRAWINGS, IT IS NOT POSSIBLE TO INDICATE ALL OFFSETS, FITTINGS, ETC., WHICH MAY BE REQUIRES. IT SHALL BE THE RESPONSIBILITY OF THE CONTRACTOR TO REVIEW THESE DRAWINGS AND FURNISH ALL FITTINGS, ETC. NECESSARY TO COMPLETE THE WORK AS SHOWN.
9. WATER, SEWER & STORM DRAIN LINES TO HAVE TRACER WIRE INSTALLED ON ALL RUNS WITHIN THE PARK. SEE CITY OF PORTERVILLE STANDARD DETAIL DRAWING W-27 ON SHEET CC508 FOR TYPICAL TRACER WIRE INSTALLATION REQUIREMENTS.
10. SEE MECHANICAL, STRUCTURAL, PLUMBING AND FIRE SPRINKLER CONTRACTOR DRAWINGS FOR ADDITIONAL INFORMATION.
11. ALL FITTINGS FOR WATER PIPING SHALL BE PREMANUFACTURED OR PREFORMED. FIELD-FORMED CONNECTIONS WILL NOT BE PERMITTED.
12. APPROXIMATE ROOF DRAIN LOCATIONS ARE SHOWN ON THESE DRAWINGS, IT SHALL BE THE CONTRACTOR'S RESPONSIBILITY TO VERIFY THAT ROOF DRAIN LOCATIONS ARE IN THE PROPER LOCATIONS RELATIVE TO BUILDING WINDOWS AND APPURTENANCES PRIOR TO CONSTRUCTION.
13. CONTRACTOR SHALL BE RESPONSIBLE FOR RAISING ALL VALVES, MANHOLES AND ANY OTHER CITY OF PORTERVILLE VAULTS AND BOXES FOUND WITHIN THE PROJECT BOUNDARY WHETHER OR NOT THEY ARE SHOWN ON THESE PLANS. PRIVATE UTILITY COMPANIES ARE RESPONSIBLE FOR RAISING THEIR VALVES, MANHOLES AND ANY OTHER VAULTS AND BOZES. CONTRACTOR SHALL COORDINATE WITH PRIVATE UTILITY COMPANIES WHEN SUCH WORK IS REQUIRED.
14. SEE SHEET CC101 FOR OFF-SITE IMPROVEMENTS ON HENDERSON AVENUE
16. ALL WORK AND MATERIALS WITHIN THE STREET RIGHTS OF WAY SHALL CONFORM TO CITY OF PORTERVILLE TECHNICAL SPECIFICATIONS AND PUBLIC IMPROVEMENT STANDARDS.
17. ON-SITE STORM DRAIN PIPING SHALL BE SDR-35 PVC PIPING.
18. ON-SITE SANITARY SEWER PIPE SHALL BE SDR-26 PVC PIPING.
19. ON-SITE DOMESTIC WATER PIPE SHALL BE SCHEDULE 40 PVC PIPING.
20. **ON-SITE FIRE SPRINKLER PIPING SHALL BE DESIGNED AND INSTALLED BY FIRE SPRINKLER CONTRACTOR. PIPING LOCATIONS INCLUDING FIRE SPRINKLER RISER LOCATIONS ARE SCHEMATIC AND MAY BE SUBJECT TO CHANGE. IT IS THE RESPONSIBILITY OF THE FIRE SPRINKLER CONTRACTOR TO VERIFY ALL FIRE SYSTEM PIPE SIZES AS SHOWN ON THIS PLAN PRIOR TO INSTALLATION AND DETERMINE FINAL LOCATION OF FIRE RISERS.**
21. THRUST BLOCKS SHALL BE CONSTRUCTED AT ALL HORIZONTAL AND VERTICAL FITTINGS FOR WATER PRESSURE PIPES THAT ARE 4" DIAMETER OR LARGER. REFER TO DETAIL 34-CC501 FOR THRUST BLOCKS RELATED TO ON-SITE WORK.

CONSTRUCTION KEYNOTES

(SHEETS CU101 - CU103)

1. STUB 4" STORM DRAIN LATERAL TO DOWNSPOUTS. LATERALS SHALL HAVE A MINIMUM SLOPE OF 2.0%. CONTRACTOR SHALL FURNISH AND INSTALL NECESSARY FITTINGS TO MAKE PROPER CONNECTIONS. VERIFY LOCATIONS AND SIZES DOWNSPOUT LEADERS PRIOR TO CONSTRUCTION. SEE DETAIL 23/CC502 FOR DOWNSPOUT CONNECTION DETAIL.
2. CONSTRUCT ONSITE CLEANOUT GRADE. SEE DETAIL 11/CC502.
3. CONSTRUCT ONSITE CATCH BASIN PER CITY STANDARD. SEE DETAIL D-5/CC507.
4. CONSTRUCT STORM DRAIN MANHOLE PER CITY STANDARD. SEE DETAIL D-1/CC506.
5. FURNISH AND INSTALL GATE VALVE, SEE DETAIL W-7/CC508.
6. 4" DOMESTIC WATER BACKFLOW PREVENTER, SEE DETAIL 42/CC501.
7. POINT OF UTILITY CONNECTION OUTSIDE THE BUILDING SEE PLUMBING DWGS. FOR CONTINUATION. VERIFY SIZE OF PIPE LOCATION AND DEPTH WITH PLUMBING DWGS. PRIOR TO INSTALLATION.
8. POINT OF UTILITY CONNECTION OUTSIDE THE BUILDING. SEE FIRE SPRINKLER DWGS. FOR CONTINUATION OF FIRE SERVICE. VERIFY RISER LOCATION WITH FIRE SPRINKLER DESIGN PRIOR TO INSTALLATION.
9. FURNISH & INSTALL FIRE DEPARTMENT CONNECTION, SEE DETAIL 22/CC502.
10. SEE HENDERSON AVE OFF-SITE IMPROVEMENT PLANS FOR CONTINUATION.
11. FURNISH & INSTALL FIRE HYDRANT PER CITY STANDARD, SEE DETAIL W-8.1/CC508.
12. FURNISH & INSTALL LARGE AREA DRAIN INLET, SEE DETAIL 12/CC503.
13. FURNISH & INSTALL LANDSCAPE AREA DRAIN INLET, SEE DETAIL 22/CC504.
14. FURNISH & INSTALL 8" DOUBLE CHECK DETECTOR ASSEMBLY, SEE CITY STANDARD DETAIL "W-12" ON SHEET CC508.
15. FURNISH & INSTALL ENERGY DISSIPATION DEVICE FOR ROOF DOWNSPOUTS, SEE DETAIL 13/CC503.
16. CONSTRUCT SANITARY SEWER MANHOLE PER CITY STANDARD, SEE DETAIL S-1/CC506.
17. FURNISH & INSTALL DRAIN INLET/DRYWELL AT PLAY AREA, SEE DETAIL 22/CC503.
18. FURNISH & INSTALL BIOSWALE DRAIN INLET, SEE DETAIL 12/CC504.
19. FURNISH & INSTALL BIOSWALE OVERFLOW DRAIN INLET, SEE DETAIL 21/CC504.
20. FURNISH & INSTALL DRAIN INLET WITH ADA GRATE, SEE DETAIL 13/CC504.
21. FURNISH & INSTALL 8" CHECK VALVE IN FIRE SPRINKLER LINE.
22. DRINKING FOUNTAIN. SEE ARCH. DRAWINGS FOR DETAILS. SEE DETAIL 24/CC502 FOR DRY WELL.
23. FURNISH & INSTALL ATRIUM GRATE DRAIN. SEE DETAIL 44/CC503.

LEGEND

- EXISTING PROPERTY BOUNDARY
- SD — NEW STORM DRAIN PIPING
- SS — NEW SEWER PIPING
- W — NEW WATER PIPING
- F — NEW FIRE WATER PIPING
- FDC — NEW FDC PIPING

rrm design group
rrmdesign.com | (805) 543-1794
3765 SOUTH HIGUERA STREET, SUITE 102
SAN LUIS OBISPO, CA 93401

THE INCLUDED DRAWINGS, SPECIFICATIONS, IDEAS, DESIGNS AND ARRANGEMENTS REPRESENTED THEREBY ARE AND SHALL REMAIN THE PROPERTY OF RRM DESIGN GROUP AND NO PART THEREOF SHALL BE COPIED, DISCLOSED TO OTHERS OR USED IN CONNECTION WITH ANY WORK OR PROJECT OTHER THAN THE SPECIFIED PROJECT FOR WHICH THEY HAVE BEEN PREPARED AND DEVELOPED WITHOUT THE WRITTEN CONSENT OF RRM DESIGN GROUP. VISUAL CONTACT WITH THESE DRAWINGS OR OTHER ACT OF POSSESSION CONSTITUTES ACCEPTANCE OF THE ABOVE STATED RESTRICTIONS. SUBMITTAL OF THESE DOCUMENTS FOR PUBLIC AGENCY REVIEW SHALL NOT BE CONSIDERED A WAIVER OF RRM DESIGN GROUP'S RIGHTS.
RRM DESIGN GROUP COPYRIGHT 2023.
RRM IS A CALIFORNIA CORPORATION

REGISTERED PROFESSIONAL ENGINEER
WA VANG
C-ACE 86967
08/30/2024
CIVIL
STATE OF CALIFORNIA

CONSULTANT

LANE ENGINEERS INC.
CIVIL • STRUCTURAL • SURVEYING
979 N. BLACKSTONE STREET
TULARE, CALIFORNIA 93274
(559) 688-5263
www.laneengineers.com

AGENCY

FOURTH ST COMMUNITY CENTER AND PARK

HENDERSON AVE., PORTERVILLE, CA 93257

WET PIPING PLAN

NO.	REVISION	DATE
1	PLAN CHEK REVISION 1	5/17/24

PLAN CHECK REVISION 1

PROJECT MANAGER
LANCE WIERSCHEM

DRAWN BY	CHECKED BY
W.V.	A.P.O.

DATE
2024.01.15

PROJECT NUMBER
2883-01-RC22

SHEET
CU101

LANE PROJECT NO. 22306

J:\Jobs\2022\22306\Dwg\Production Drawings\C4_Wet Piping Plan.dwg, CU101, Aug 30, 2024 1:10pm, wa

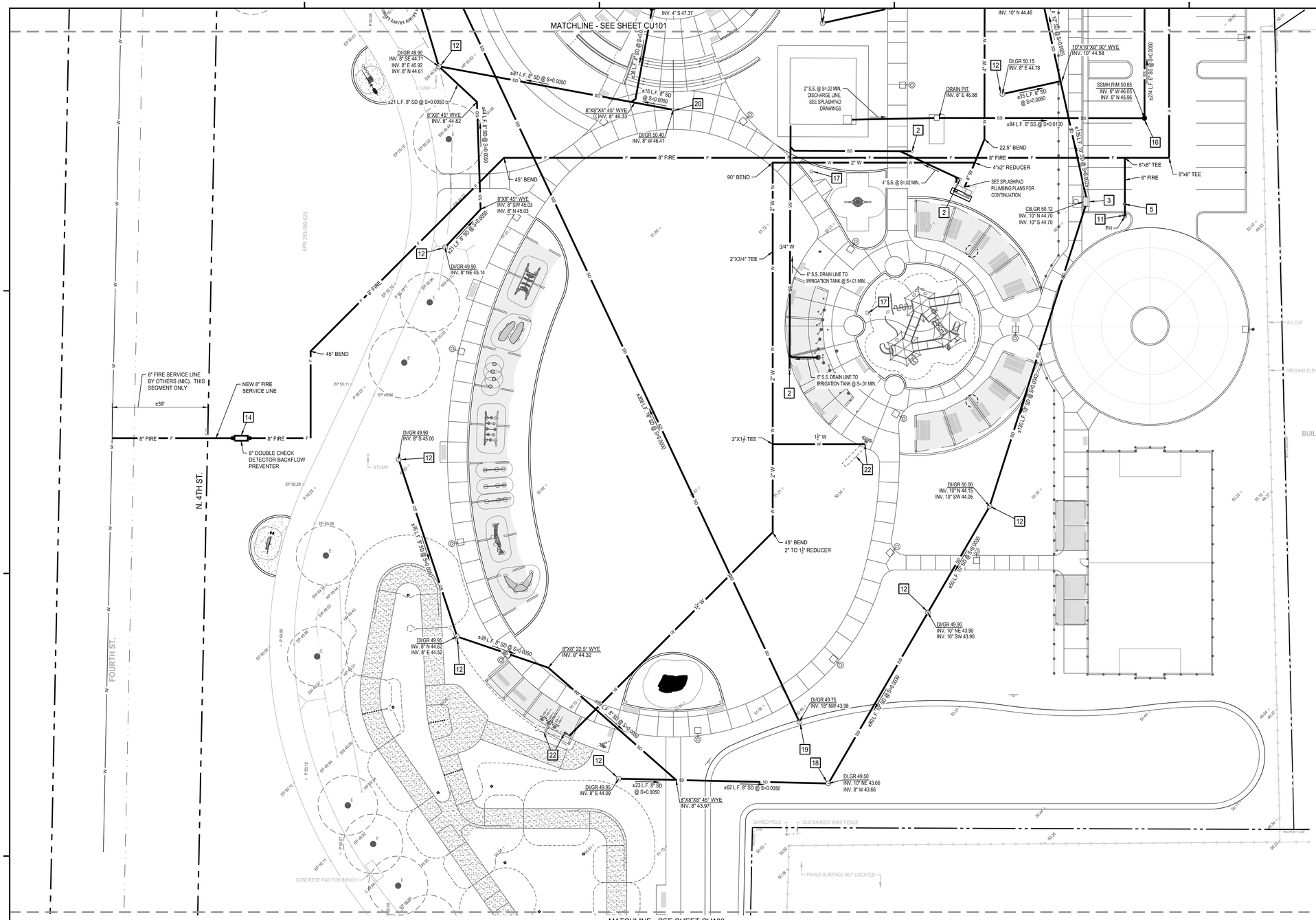

NORTH

GRAPHIC SCALE

20 0 10 20 40

1 INCH = 20 FT.

WET PIPING NOTES

(SHEETS CU101 - CU103)

1. REFER TO SHEETS C001 FOR BENCHMARKS, GENERAL NOTES, INFORMATION, AND SPECIFICATIONS.
2. ADD 400.00 FEET TO ELEVATIONS SHOWN ON PLAN TO OBTAIN DATUM BASED ON NORTH AMERICAN VERTICAL DATUM 1988 (NAVD 1988).
3. CONTRACTOR SHALL VERIFY ALL SIZES OF WATER PIPING SHOWN ON THIS DRAWING PRIOR TO INSTALLING ANY NEW PIPE.
4. WATER LATERAL PIPING SHALL BE A MINIMUM OF 12" CLEAR ABOVE AND 18' CLEAR HORIZONTALLY FROM SANITARY SEWER FOR PARALLEL INSTALLATIONS. AT CROSSINGS WATER SHALL BE ABOVE THE SANITARY SEWER WITH A 12" MINIMUM CLEARANCE.
5. ALL ONSITE TRENCHES SHALL BE BACKFILLED PER DETAIL 13/CC501.
6. EXTEND SITE UTILITIES TO WITHIN 5' OF BUILDING UNLESS SHOWN OR NOTED OTHERWISE.
7. SEE LANDSCAPE DRAWINGS FOR ALL IRRIGATION LINES AND SLEEVE LOCATIONS.
8. DUE TO THE SCALE OF THE DRAWINGS, IT IS NOT POSSIBLE TO INDICATE ALL OFFSETS, FITTINGS, ETC., WHICH MAY BE REQUIRED. IT SHALL BE THE RESPONSIBILITY OF THE CONTRACTOR TO REVIEW THESE DRAWINGS AND FURNISH ALL FITTINGS, ETC. NECESSARY TO COMPLETE THE WORK AS SHOWN.
9. WATER, SEWER & STORM DRAIN LINES TO HAVE TRACER WIRE INSTALLED ON ALL RUNS WITHIN THE PARK. SEE CITY OF PORTERVILLE STANDARD DETAIL DRAWING W-27 ON SHEET CC508 FOR TYPICAL TRACER WIRE INSTALLATION REQUIREMENTS.
10. SEE MECHANICAL, STRUCTURAL, PLUMBING AND FIRE SPRINKLER CONTRACTOR DRAWINGS FOR ADDITIONAL INFORMATION.
11. ALL FITTINGS FOR WATER PIPING SHALL BE PREMANUFACTURED OR PREFORMED. FIELD-FORMED CONNECTIONS WILL NOT BE PERMITTED.
12. APPROXIMATE ROOF DRAIN LOCATIONS ARE SHOWN ON THESE DRAWINGS. IT SHALL BE THE CONTRACTOR'S RESPONSIBILITY TO VERIFY THAT ROOF DRAIN LOCATIONS ARE IN THE PROPER LOCATIONS RELATIVE TO BUILDING WINDOWS AND APPURTENANCES PRIOR TO CONSTRUCTION.
13. CONTRACTOR SHALL BE RESPONSIBLE FOR RAISING ALL VALVES, MANHOLES AND ANY OTHER CITY OF PORTERVILLE VAULTS AND BOXES FOUND WITHIN THE PROJECT BOUNDARY WHETHER OR NOT THEY ARE SHOWN ON THESE PLANS. PRIVATE UTILITY COMPANIES ARE RESPONSIBLE FOR RAISING THEIR VALVES, MAHNOLES AND ANY OTHER VAULTS AND BOZES. CONTRACTOR SHALL COORDINATE WITH PRIVATE UTILITY COMPANIES WHEN SUCH WORK IS REQUIRED.
14. SEE SHEET CC101 FOR OFF-SITE IMPROVEMENTS ON HENDERSON AVENUE
16. ALL WORK AND MATERIALS WITHIN THE STREET RIGHTS OF WAY SHALL CONFORM TO CITY OF PORTERVILLE TECHNICAL SPECIFICATIONS AND PUBLIC IMPROVEMENT STANDARDS.
17. ON-SITE STORM DRAIN PIPING SHALL BE SDR-35 PVC PIPING.
18. ON-SITE SANITARY SEWER PIPE SHALL BE SDR-26 PVC PIPING.
19. ON-SITE DOMESTIC WATER PIPE SHALL BE SCHEDULE 40 PVC PIPING.
20. **ON-SITE FIRE SPRINKLER PIPING SHALL BE DESIGNED AND INSTALLED BY FIRE SPRINKLER CONTRACTOR. PIPING LOCATIONS INCLUDING FIRE SPRINKLER RISER LOCATIONS ARE SCHEMATIC AND MAY BE SUBJECT TO CHANGE. IT IS THE RESPONSIBILITY OF THE FIRE SPRINKLER CONTRACTOR TO VERIFY ALL FIRE SYSTEM PIPE SIZES AS SHOWN ON THIS PLAN PRIOR TO INSTALLATION AND DETERMINE FINAL LOCATION OF FIRE RISERS.**
21. THRUST BLOCKS SHALL BE CONSTRUCTED AT ALL HORIZONTAL AND VERTICAL FITTINGS FOR WATER PRESSURE PIPES THAT ARE 4" DIAMETER OR LARGER. REFER TO DETAIL 34-CC501 FOR THRUST BLOCKS RELATED TO ON-SITE WORK.

CONSTRUCTION KEYNOTES

(SHEETS CU101 - CU103)

1. STUB 4" STORM DRAIN LATERAL TO DOWNSPOUTS. LATERALS SHALL HAVE A MINIMUM SLOPE OF 2.0%. CONTRACTOR SHALL FURNISH AND INSTALL NECESSARY FITTINGS TO MAKE PROPER CONNECTIONS. VERIFY LOCATIONS AND SIZES DOWNSPOUT LEADERS PRIOR TO CONSTRUCTION. SEE DETAIL 23/CC502 FOR DOWNSPOUT CONNECTION DETAIL.
2. CONSTRUCT ONSITE CLEANOUT GRADE, SEE DETAIL 11/CC502.
3. CONSTRUCT ONSITE CATCH BASIN PER CITY STANDARD. SEE DETAIL D-5/CC507.
4. CONSTRUCT STORM DRAIN MANHOLE PER CITY STANDARD. SEE DETAIL D-1/CC506.
5. FURNISH AND INSTALL GATE VALVE, SEE DETAIL W-7/CC508.
6. 4" DOMESTIC WATER BACKFLOW PREVENTER, SEE DETAIL 42/CC501.
7. POINT OF UTILITY CONNECTION OUTSIDE THE BUILDING SEE PLUMBING DWGS. FOR CONTINUATION. VERIFY SIZE OF PIPE LOCATION AND DEPTH WITH PLUMBING DWGS. PRIOR TO INSTALLATION.
8. POINT OF UTILITY CONNECTION OUTSIDE THE BUILDING. SEE FIRE SPRINKLER DWGS. FOR CONTINUATION OF FIRE SERVICE. VERIFY RISER LOCATION WITH FIRE SPRINKLER DESIGN PRIOR TO INSTALLATION.
9. FURNISH & INSTALL FIRE DEPARTMENT CONNECTION, SEE DETAIL 22/CC502.
10. SEE HENDERSON AVE OFF-SITE IMPROVEMENT PLANS FOR CONTINUATION.
11. FURNISH & INSTALL FIRE HYDRANT PER CITY STANDARD, SEE DETAIL W-8.1/CC508.
12. FURNISH & INSTALL LARGE AREA DRAIN INLET, SEE DETAIL 12/CC503.
13. FURNISH & INSTALL LANDSCAPE AREA DRAIN INLET, SEE DETAIL 22/CC504.
14. FURNISH & INSTALL 8" DOUBLE CHECK DETECTOR ASSEMBLY, SEE CITY STANDARD DETAIL "W-12" ON SHEET CC508.
15. FURNISH & INSTALL ENERGY DISSIPATION DEVICE FOR ROOF DOWNSPOUTS, SEE DETAIL 13/CC503.
16. CONSTRUCT SANITARY SEWER MANHOLE PER CITY STANDARD, SEE DETAIL S-1/CC506.
17. FURNISH & INSTALL DRAIN INLET/DRYWELL AT PLAY AREA, SEE DETAIL 22/CC503.
18. FURNISH & INSTALL BIOSWALE DRAIN INLET, SEE DETAIL 12/CC504.
19. FURNISH & INSTALL BIOSWALE OVERFLOW DRAIN INLET, SEE DETAIL 21/CC504.
20. FURNISH & INSTALL DRAIN INLET WITH ADA GRATE, SEE DETAIL 13/CC504.
21. FURNISH & INSTALL 8" CHECK VALVE IN FIRE SPRINKLER LINE.
22. DRINKING FOUNTAIN. SEE ARCH. DRAWINGS FOR DETAILS. SEE DETAIL 24/CC502 FOR DRY WELL.
23. FURNISH & INSTALL ATRIUM GRATE DRAIN. SEE DETAIL 44/CC503.

LEGEND

- EXISTING PROPERTY BOUNDARY
- SD — NEW STORM DRAIN PIPING
- SS — NEW SEWER PIPING
- W — NEW WATER PIPING
- F — NEW FIRE WATER PIPING
- FDC — NEW FDC PIPING

rrm design group
rrmdesign.com | (805) 543-1794
3765 SOUTH HIGUERA STREET, SUITE 102
SAN LUIS OBISPO, CA 93401

THE INCLUDED DRAWINGS, SPECIFICATIONS, IDEAS, DESIGNS AND ARRANGEMENTS REPRESENTED THEREBY ARE AND SHALL REMAIN THE PROPERTY OF RRM DESIGN GROUP AND NO PART THEREOF SHALL BE COPIED, DISCLOSED TO OTHERS OR USED IN CONNECTION WITH ANY WORK OR PROJECT OTHER THAN THE SPECIFIED PROJECT FOR WHICH THEY HAVE BEEN PREPARED AND DEVELOPED WITHOUT THE WRITTEN CONSENT OF RRM DESIGN GROUP. VISUAL CONTACT WITH THESE DRAWINGS OR SPECIFICATIONS SHALL CONSTITUTE PROOF OF ACCEPTANCE OF THESE RESTRICTIONS. SUBMITTAL OF THESE DOCUMENTS FOR PUBLIC AGENCY REVIEW SHALL NOT BE CONSIDERED A WAIVER OF RRM DESIGN GROUP'S RIGHTS.
RRM DESIGN GROUP COPYRIGHT 2023.
RRM IS A CALIFORNIA CORPORATION

REGISTERED PROFESSIONAL ENGINEER
WA VANG
No. C 86967
08/30/2024
CIVIL
STATE OF CALIFORNIA

CONSULTANT

LANE ENGINEERS INC.
CIVIL • STRUCTURAL • SURVEYING
979 N. BLACKSTONE STREET
TULARE, CALIFORNIA 93274
(559) 688-5263
www.laneengineers.com

AGENCY

FOURTH ST COMMUNITY CENTER AND PARK

HENDERSON AVE., PORTERVILLE, CA 93257

WET PIPING PLAN

NO.	REVISION	DATE
1	PLAN CHEK REVISION 1	5/17/24

PLAN CHECK REVISION 1

PROJECT MANAGER
LANCE WIERSCHEM

DRAWN BY W.V. | CHECKED BY A.P.O.

DATE 2024.01.15

PROJECT NUMBER 2883-01-RC22

SHEET CU102

LANE PROJECT NO. 22306

J:\Jobs\2022\22306\Dwg\Production Drawings\C4_Wet Piping Plan.dwg, CU102, Aug 30, 2024 1:10pm, wa

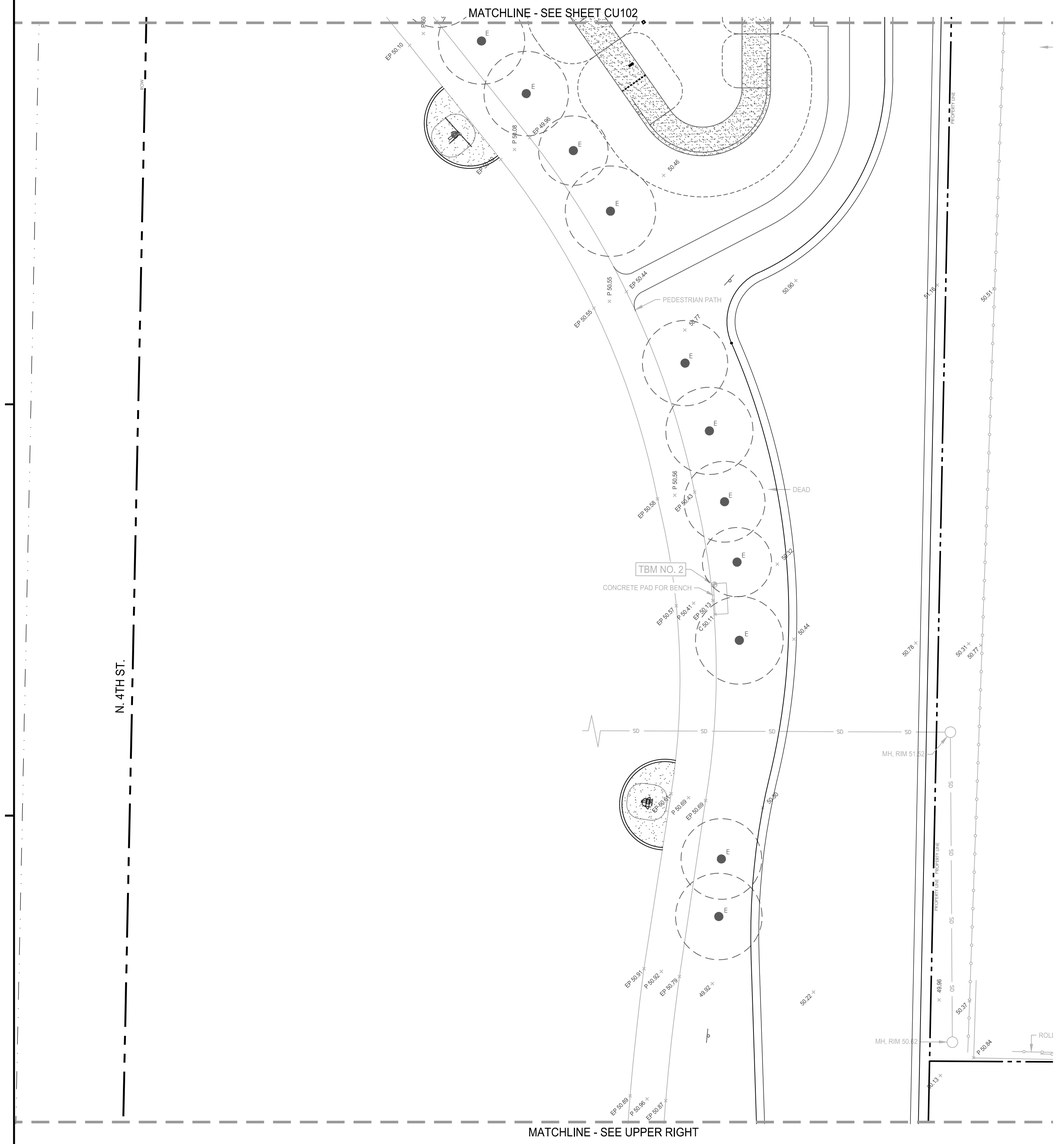

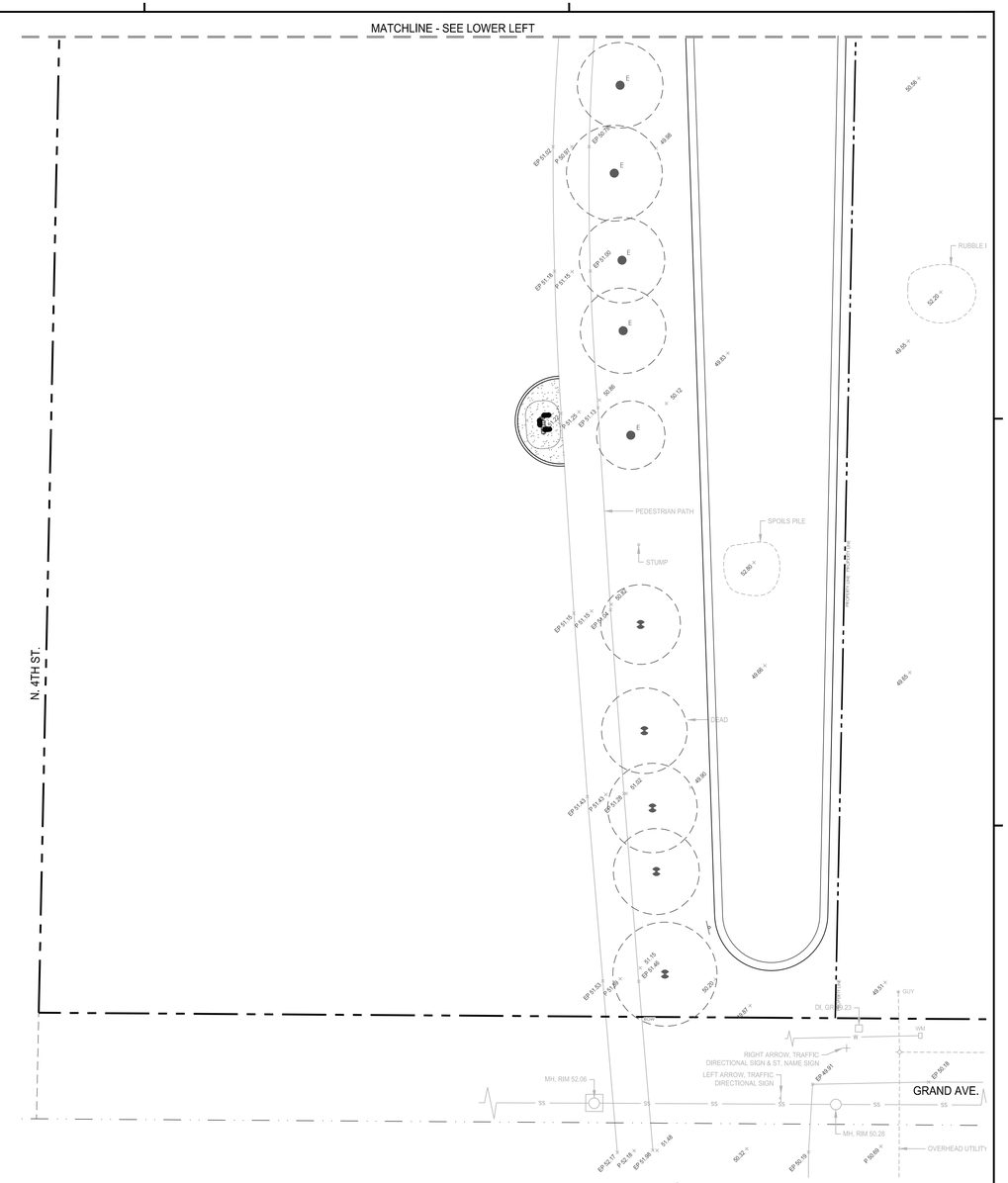

NORTH

GRAPHIC SCALE

20 0 10 20 40

1 INCH = 20 FT.

WET PIPING NOTES

(SHEETS CU101 - CU103)

1. REFER TO SHEETS C001 FOR BENCHMARKS, GENERAL NOTES, INFORMATION, AND SPECIFICATIONS.
2. ADD 400.00 FEET TO ELEVATIONS SHOWN ON PLAN TO OBTAIN DATUM BASED ON NORTH AMERICAN VERTICAL DATUM 1988 (NAVD 1988).
3. CONTRACTOR SHALL VERIFY ALL SIZES OF WATER PIPING SHOWN ON THIS DRAWING PRIOR TO INSTALLING ANY NEW PIPE.
4. WATER LATERAL PIPING SHALL BE A MINIMUM OF 12" CLEAR ABOVE AND 18' CLEAR HORIZONTALLY FROM SANITARY SEWER FOR PARALLEL INSTALLATIONS. AT CROSSINGS WATER SHALL BE ABOVE THE SANITARY SEWER WITH A 12" MINIMUM CLEARANCE.
5. ALL ONSITE TRENCHES SHALL BE BACKFILLED PER DETAIL 13/CC501.
6. EXTEND SITE UTILITIES TO WITHIN 5' OF BUILDING UNLESS SHOWN OR NOTED OTHERWISE.
7. SEE LANDSCAPE DRAWINGS FOR ALL IRRIGATION LINES AND SLEEVE LOCATIONS.
8. DUE TO THE SCALE OF THE DRAWINGS, IT IS NOT POSSIBLE TO INDICATE ALL OFFSETS, FITTINGS, ETC., WHICH MAY BE REQUIRES. IT SHALL BE THE RESPONSIBILITY OF THE CONTRACTOR TO REVIEW THESE DRAWINGS AND FURNISH ALL FITTINGS, ETC. NECESSARY TO COMPLETE THE WORK AS SHOWN.
9. WATER, SEWER & STORM DRAIN LINES TO HAVE TRACER WIRE INSTALLED ON ALL RUNS WITHIN THE PARK, SEE CITY OF PORTERVILLE STANDARD DETAIL DRAWING W-27 ON SHEET CC508 FOR TYPICAL TRACER WIRE INSTALLATION REQUIREMENTS.
10. SEE MECHANICAL, STRUCTURAL, PLUMBING AND FIRE SPRINKLER CONTRACTOR DRAWINGS FOR ADDITIONAL INFORMATION.
11. ALL FITTINGS FOR WATER PIPING SHALL BE PREMANUFACTURED OR PREFORMED. FIELD-FORMED CONNECTIONS WILL NOT BE PERMITTED.
12. APPROXIMATE ROOF DRAIN LOCATIONS ARE SHOWN ON THESE DRAWINGS. IT SHALL BE THE CONTRACTOR'S RESPONSIBILITY TO VERIFY THAT ROOF DRAIN LOCATIONS ARE IN THE PROPER LOCATIONS RELATIVE TO BUILDING WINDOWS AND APPURTENANCES PRIOR TO CONSTRUCTION.
13. CONTRACTOR SHALL BE RESPONSIBLE FOR RAISING ALL VALVES, MANHOLES AND ANY OTHER CITY OF PORTERVILLE VAULTS AND BOXES FOUND WITHIN THE PROJECT BOUNDARY WHETHER OR NOT THEY ARE SHOWN ON THESE PLANS. PRIVATE UTILITY COMPANIES ARE RESPONSIBLE FOR RAISING THEIR VALVES, MANHOLES AND ANY OTHER VAULTS AND BOZES. CONTRACTOR SHALL COORDINATE WITH PRIVATE UTILITY COMPANIES WHEN SUCH WORK IS REQUIRED.
14. SEE SHEET CC101 FOR OFF-SITE IMPROVEMENTS ON HENDERSON AVENUE
16. ALL WORK AND MATERIALS WITHIN THE STREET RIGHTS OF WAY SHALL CONFORM TO CITY OF PORTERVILLE TECHNICAL SPECIFICATIONS AND PUBLIC IMPROVEMENT STANDARDS.
17. ON-SITE STORM DRAIN PIPING SHALL BE SDR-35 PVC PIPING.
18. ON-SITE SANITARY SEWER PIPE SHALL BE SDR-26 PVC PIPING.
19. ON-SITE DOMESTIC WATER PIPE SHALL BE SCHEDULE 40 PVC PIPING.
20. **ON-SITE FIRE SPRINKLER PIPING SHALL BE DESIGNED AND INSTALLED BY FIRE SPRINKLER CONTRACTOR, PIPING LOCATIONS INCLUDING FIRE SPRINKLER RISER LOCATIONS ARE SCHEMATIC AND MAY BE SUBJECT TO CHANGE. IT IS THE RESPONSIBILITY OF THE FIRE SPRINKLER CONTRACTOR TO VERIFY ALL FIRE SYSTEM PIPE SIZES AS SHOWN ON THIS PLAN PRIOR TO INSTALLATION AND DETERMINE FINAL LOCATION OF FIRE RISERS.**
21. THRUST BLOCKS SHALL BE CONSTRUCTED AT ALL HORIZONTAL AND VERTICAL FITTINGS FOR WATER PRESSURE PIPES THAT ARE 4" DIAMETER OR LARGER. REFER TO DETAIL 34-CC501 FOR THRUST BLOCKS RELATED TO ON-SITE WORK.

CONSTRUCTION KEYNOTES

(SHEETS CU101 - CU103)

1. STUB 4" STORM DRAIN LATERAL TO DOWNSPOUTS. LATERALS SHALL HAVE A MINIMUM SLOPE OF 2.0%. CONTRACTOR SHALL FURNISH AND INSTALL NECESSARY FITTINGS TO MAKE PROPER CONNECTIONS. VERIFY LOCATIONS AND SIZES DOWNSPOUT LEADERS PRIOR TO CONSTRUCTION. SEE DETAIL 23/CC502 FOR DOWNSPOUT CONNECTION DETAIL.
2. CONSTRUCT ONSITE CLEANOUT GRADE, SEE DETAIL 11/CC502.
3. CONSTRUCT ONSITE CATCH BASIN PER CITY STANDARD. SEE DETAIL D-5/CC507.
4. CONSTRUCT STORM DRAIN MANHOLE PER CITY STANDARD. SEE DETAIL D-1/CC506.
5. FURNISH AND INSTALL GATE VALVE, SEE DETAIL W-7/CC508.
6. 4" DOMESTIC WATER BACKFLOW PREVENTER, SEE DETAIL 42/CC501.
7. POINT OF UTILITY CONNECTION OUTSIDE THE BUILDING SEE PLUMBING DWGS. FOR CONTINUATION. VERIFY SIZE OF PIPE LOCATION AND DEPTH WITH PLUMBING DWGS. PRIOR TO INSTALLATION.
8. POINT OF UTILITY CONNECTION OUTSIDE THE BUILDING. SEE FIRE SPRINKLER DWGS. FOR CONTINUATION OF FIRE SERVICE. VERIFY RISER LOCATION WITH FIRE SPRINKLER DESIGN PRIOR TO INSTALLATION.
9. FURNISH & INSTALL FIRE DEPARTMENT CONNECTION, SEE DETAIL 22/CC502.
10. SEE HENDERSON AVE OFF-SITE IMPROVEMENT PLANS FOR CONTINUATION.
11. FURNISH & INSTALL FIRE HYDRANT PER CITY STANDARD, SEE DETAIL W-8.1/CC508.
12. FURNISH & INSTALL LARGE AREA DRAIN INLET, SEE DETAIL 12/CC503.
13. FURNISH & INSTALL LANDSCAPE AREA DRAIN INLET, SEE DETAIL 22/CC504.
14. FURNISH & INSTALL 8" DOUBLE CHECK DETECTOR ASSEMBLY, SEE CITY STANDARD DETAIL "W-12" ON SHEET CC508.
15. FURNISH & INSTALL ENERGY DISSIPATION DEVICE FOR ROOF DOWNSPOUTS, SEE DETAIL 13/CC503.
16. CONSTRUCT SANITARY SEWER MANHOLE PER CITY STANDARD, SEE DETAIL S-1/CC506.
17. FURNISH & INSTALL DRAIN INLET/DRYWELL AT PLAY AREA, SEE DETAIL 22/CC503.
18. FURNISH & INSTALL BIOSWALE DRAIN INLET, SEE DETAIL 12/CC504.
19. FURNISH & INSTALL BIOSWALE OVERFLOW DRAIN INLET, SEE DETAIL 21/CC504.
20. FURNISH & INSTALL DRAIN INLET WITH ADA GRATE, SEE DETAIL 13/CC504.
21. FURNISH & INSTALL 8" CHECK VALVE IN FIRE SPRINKLER LINE.
22. DRINKING FOUNTAIN. SEE ARCH. DRAWINGS FOR DETAILS. SEE DETAIL 24/CC502 FOR DRY WELL.
23. FURNISH & INSTALL ATRIUM GRATE DRAIN. SEE DETAIL 44/CC503.

LEGEND

- EXISTING PROPERTY BOUNDARY
- SD — NEW STORM DRAIN PIPING
- SS — NEW SEWER PIPING
- W — NEW WATER PIPING
- F — NEW FIRE WATER PIPING
- FDC — NEW FDC PIPING

rrm design group
rrmdesign.com | (805) 543-1794
3765 SOUTH HIGUERA STREET, SUITE 102
SAN LUIS OBISPO, CA 93401

THE INCLUDED DRAWINGS, SPECIFICATIONS, IDEAS, DESIGNS AND ARRANGEMENTS REPRESENTED THEREBY ARE AND SHALL REMAIN THE PROPERTY OF RRM DESIGN GROUP AND NO PART THEREOF SHALL BE COPIED, DISCLOSED TO OTHERS OR USED IN CONNECTION WITH ANY WORK OR PROJECT OTHER THAN THE SPECIFIED PROJECT FOR WHICH THEY HAVE BEEN PREPARED AND DEVELOPED WITHOUT THE WRITTEN CONSENT OF RRM DESIGN GROUP. VISUAL CONTACT WITH THESE DRAWINGS OR OTHER WRITTEN INFORMATION SHALL CONSTITUTE PROOF OF ACCEPTANCE OF RESTRICTIONS. SUBMITTAL OF THESE DOCUMENTS FOR PUBLIC AGENCY REVIEW SHALL NOT BE CONSIDERED A WAIVER OF RRM DESIGN GROUP'S RIGHTS.
RRM DESIGN GROUP COPYRIGHT 2023.
RRM IS A CALIFORNIA CORPORATION

REGISTERED PROFESSIONAL ENGINEER
WA VANG
C.E. NO. 80967
08/30/2024
CIVIL
STATE OF CALIFORNIA

CONSULTANT

LANE ENGINEERS INC.
CIVIL • STRUCTURAL • SURVEYING
979 N. BLACKSTONE STREET
TULARE, CALIFORNIA 93274
(559) 688-5263
www.laneengineers.com

AGENCY

FOURTH ST COMMUNITY CENTER AND PARK

HENDERSON AVE., PORTERVILLE, CA 93257

WET PIPING PLAN

NO.	REVISION	DATE
1	PLAN CHEK REVISION 1	5/17/24

PLAN CHECK REVISION 1

PROJECT MANAGER
LANCE WIERSCHEM

DRAWN BY	CHECKED BY
W.V.	A.P.O.

DATE
2024.01.15

PROJECT NUMBER
2883-01-RC22

SHEET
CU103

LANE PROJECT NO. 22306

J:\Jobs\2022\22306\Dwg\Production Drawings\C4_Wet Piping Plan.dwg, CU103, Aug 30, 2024 1:11pm, wa

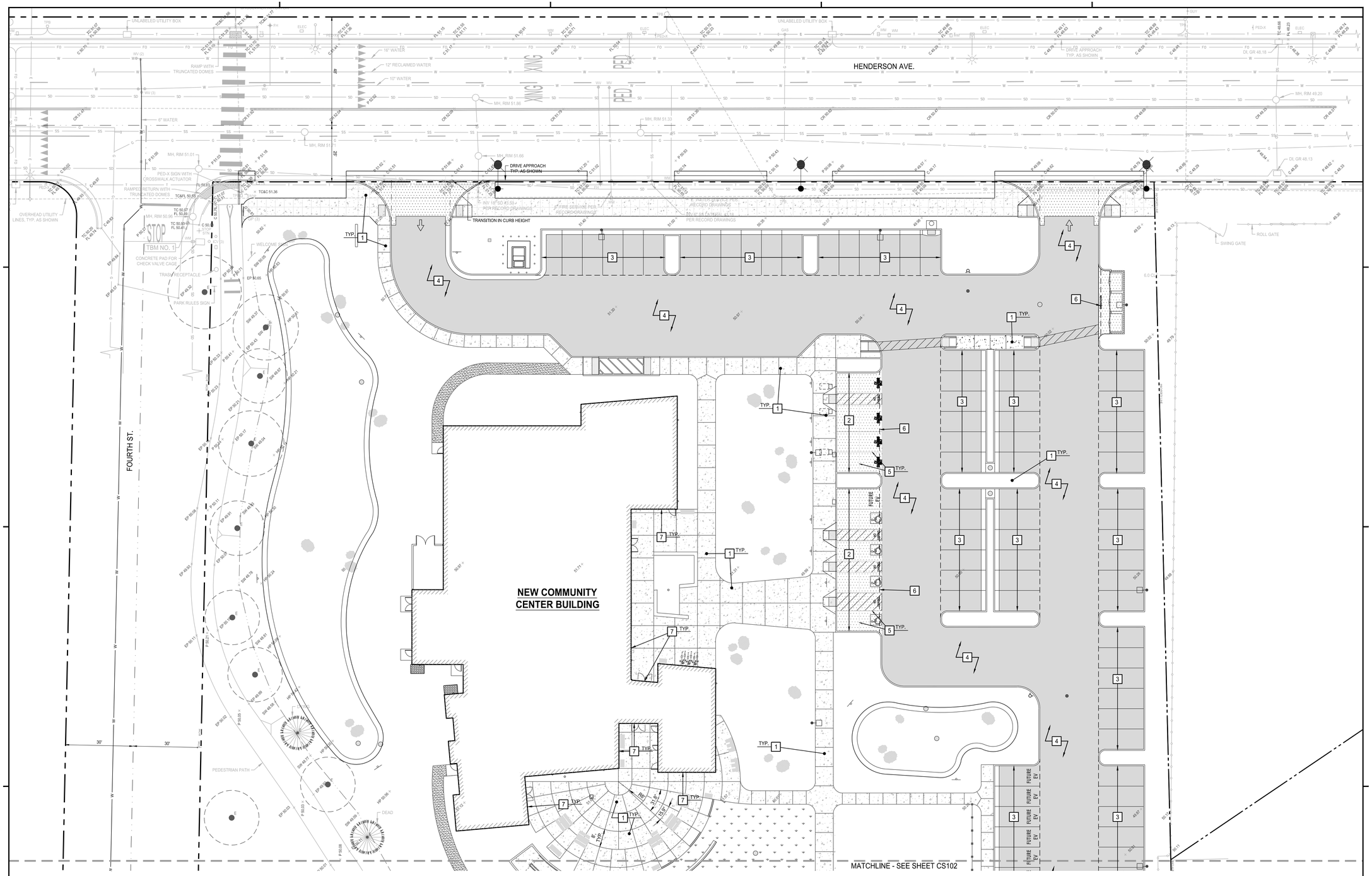

NOTES

1. REFER TO SHEETS C001 & C002 FOR GENERAL NOTES, INFORMATION, AND SPECIFICATIONS.
2. APPROXIMATE CONCRETE PAVEMENT JOINT LOCATIONS ARE SHOWN ON THIS DRAWING. CONTRACTOR SHALL USE EXPERIENCE AND BEST JUDGEMENT TO DETERMINE ACTUAL JOINT LOCATIONS IN THE FIELD.
3. JOINTS SHALL BE SPACED A MAXIMUM OF 10'.
4. INSTALL ISOLATION JOINTS AT ALL LOCATIONS WHERE EXTERIOR CONCRETE ABUTS CONCRETE SLABS OR FOOTINGS FOR BUILDING STRUCTURES.
5. WHERE POSSIBLE, ALL CURB & GUTTER AND LANDSCAPE CURB CONTRACTION JOINTS SHALL BE PLACED TO ALIGN WITH PARKING LOT PAVEMENT JOINTING PATTERN.
6. SEE OFFSITE IMPROVEMENTS SHEET CC101-CC102 FOR OFFSITE PAVEMENT REPAIR REQUIREMENTS.

PAVING LEGEND

- NEW CONCRETE SIDEWALK, FLATWORK AND MISCELLANEOUS CONCRETE
- NEW CONCRETE PAVEMENT
- NEW ASPHALT PAVEMENT
- PROPERTY BOUNDARY

CONSTRUCTION KEYNOTES

(SHEETS CS101 - CS103)

1. CONCRETE SIDEWALK AND WALKWAYS. SEE SHEETS CH101-CH103 FOR MORE INFORMATION.
2. REINFORCED CONCRETE PAVEMENT AT PARKING STALLS: (6" P.C.C. / 4" CL 2 A.B. / 8" C.S.G.) SEE DETAIL 11/CC501. PAVEMENT SHALL BE REINFORCED WITH #4 EA. WAY. AT 24 " O.C.
3. PARKING SPACES: 3" A.C. OVER 6" CLASS 2 AGGREGATE BASE OVER 8" COMPACTED SUBGRADE. SEE DETAIL 32/CC501.
4. DRIVE AISLES: 3.5" A.C. OVER 9" CLASS 2 AGGREGATE BASE OVER 8" COMPACTED SUBGRADE. SEE DETAIL 32/CC501.
5. CONSTRUCTION OR CONTROL JOINTS (10' O.C MAX.), TYP. SEE DETAILS 21/CC501 & 31/CC501.
6. CONST. THICKENED CONCRETE PAVEMENT EDGE WHERE CONCRETE DOES NOT ABUT CURB, TYP. SEE DETAIL 43/CC501.
7. CONSTRUCT ISOLATION JOINT WHERE CONCRETE PAVING ABUTS BUILDING CONCRETE, TYP. SEE DETAIL 14/CC501.
8. REINFORCED CONCRETE PAVEMENT: (6" P.C.C. / 6" CL 2 A.B. / 8" C.S.G.) SEE DETAIL 11/CC501.
9. A.C. SIDEWALK: 2" A.C. OVER 4" CLASS 2 AGGREGATE BASE OVER 8" COMPACTED SUBGRADE. SEE DETAIL 32/CC501.

NORTH

GRAPHIC SCALE

20 0 10 20 40

1 INCH = 20 FT.

rrm design group
rrmdesign.com | (805) 543-1794
3765 SOUTH HIGUERA STREET, SUITE 102
SAN LUIS OBISPO, CA 93401

THE INCLUDED DRAWINGS, SPECIFICATIONS, IDEAS, DESIGNS AND ARRANGEMENTS REPRESENTED THEREIN ARE AND SHALL REMAIN THE PROPERTY OF RRM DESIGN GROUP AND NO PART THEREOF SHALL BE COPIED, DISCLOSED TO OTHERS OR USED IN CONNECTION WITH ANY WORK OR PROJECT OTHER THAN THE SPECIFIED PROJECT FOR WHICH THEY HAVE BEEN PREPARED AND DEVELOPED WITHOUT THE WRITTEN CONSENT OF RRM DESIGN GROUP. VISUAL CONTACT WITH THESE DRAWINGS OR OTHERWISE OBTAINING OR RECEIVING INFORMATION FROM THEM ARE SUBJECT TO RESTRICTIONS. SUBMITTAL OF THESE DOCUMENTS FOR PUBLIC AGENCY REVIEW SHALL NOT BE CONSIDERED A WAIVER OF RRM DESIGN GROUP'S RIGHTS.
RRM DESIGN GROUP COPYRIGHT 2023.
RRM IS A CALIFORNIA CORPORATION

REGISTERED PROFESSIONAL ENGINEER
WA VANG
C. 86967
08/30/2024
CIVIL
STATE OF CALIFORNIA

CONSULTANT

LANE ENGINEERS INC.
CIVIL • STRUCTURAL • SURVEYING
979 N. BLACKSTONE STREET
TULARE, CALIFORNIA 93274
(559) 688-5263
www.laneengineers.com

AGENCY

FOURTH ST COMMUNITY CENTER AND PARK

HENDERSON AVE., PORTERVILLE, CA 93257

SITE PAVING PLAN

NO.	REVISION	DATE
1	PLAN CHEK REVISION 1	5/17/24

PROJECT MANAGER: LANCE WIERSCHEM
DRAWN BY: W.V.
CHECKED BY: A.P.O.
DATE: 2024.01.15
PROJECT NUMBER: 2883-01-RC22
SHEET: CS101

PLAN CHECK REVISION 1

LANE PROJECT NO. 22306

J:\Jobs\2022\22306\Dwg\Production Drawings\C5_Paving Plan.dwg, CS101, Aug 30, 2024 1:11pm, wa

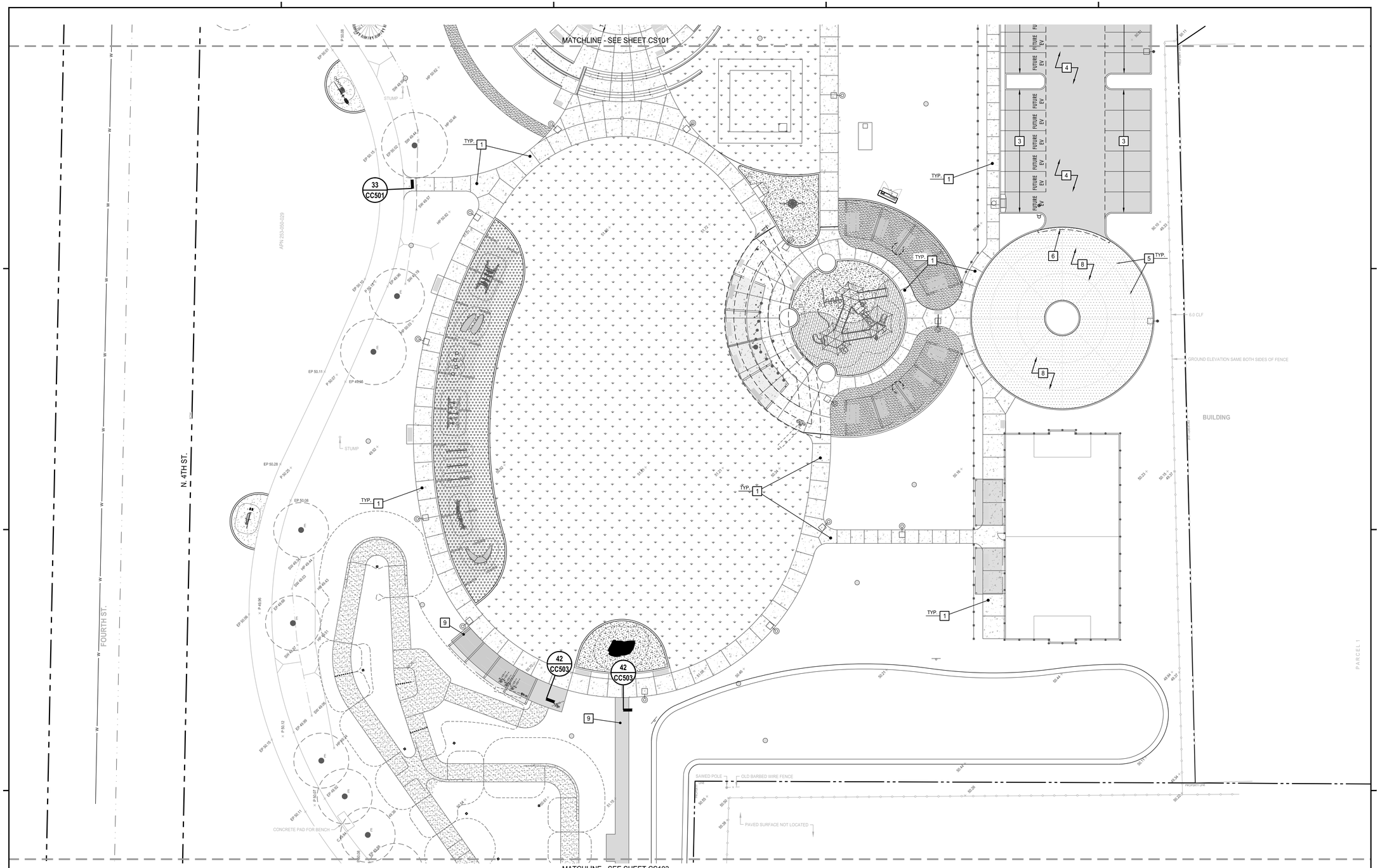

NOTES

1. REFER TO SHEETS C001 & C002 FOR GENERAL NOTES, INFORMATION, AND SPECIFICATIONS.
2. APPROXIMATE CONCRETE PAVEMENT JOINT LOCATIONS ARE SHOWN ON THIS DRAWING. CONTRACTOR SHALL USE EXPERIENCE AND BEST JUDGEMENT TO DETERMINE ACTUAL JOINT LOCATIONS IN THE FIELD.
3. JOINTS SHALL BE SPACED A MAXIMUM OF 10'.
4. INSTALL ISOLATION JOINTS AT ALL LOCATIONS WHERE EXTERIOR CONCRETE ABUTS CONCRETE SLABS OR FOOTINGS FOR BUILDING STRUCTURES.
5. WHERE POSSIBLE, ALL CURB & GUTTER AND LANDSCAPE CURB CONTRACTION JOINTS SHALL BE PLACED TO ALIGN WITH PARKING LOT PAVEMENT JOINTING PATTERN.
6. SEE OFFSITE IMPROVEMENTS SHEET CC101-CC102 FOR OFFSITE PAVEMENT REPAIR REQUIREMENTS.

PAVING LEGEND

- NEW CONCRETE SIDEWALK, FLATWORK AND MISCELLANEOUS CONCRETE
- NEW CONCRETE PAVEMENT
- NEW ASPHALT PAVEMENT
- PROPERTY BOUNDARY

CONSTRUCTION KEYNOTES

(SHEETS CS101 - CS103)

1. CONCRETE SIDEWALK AND WALKWAYS. SEE SHEETS CH101-CH103 FOR MORE INFORMATION.
2. REINFORCED CONCRETE PAVEMENT AT PARKING STALLS: (6" P.C.C. / 4" CL 2 A.B. / 8" C.S.G.) SEE DETAIL 11/CC501. PAVEMENT SHALL BE REINFORCED WITH #4 EA. WAY. AT 24 " O.C.
3. PARKING SPACES: 3" A.C. OVER 6" CLASS 2 AGGREGATE BASE OVER 8" COMPACTED SUBGRADE. SEE DETAIL 32/CC501.
4. DRIVE AISLES: 3.5" A.C. OVER 9" CLASS 2 AGGREGATE BASE OVER 8" COMPACTED SUBGRADE. SEE DETAIL 32/CC501.
5. CONSTRUCTION OR CONTROL JOINTS (10' O.C MAX.), TYP. SEE DETAILS 21/CC501 & 31/CC501.
6. CONST. THICKENED CONCRETE PAVEMENT EDGE WHERE CONCRETE DOES NOT ABUT CURB, TYP. SEE DETAIL 43/CC501.
7. CONSTRUCT ISOLATION JOINT WHERE CONCRETE PAVING ABUTS BUILDING CONCRETE, TYP. SEE DETAIL 14/CC501.
8. REINFORCED CONCRETE PAVEMENT: (6" P.C.C. / 6" CL 2 A.B. / 8" C.S.G.) SEE DETAIL 11/CC501.
9. A.C. SIDEWALK: 2" A.C. OVER 4" CLASS 2 AGGREGATE BASE OVER 8" COMPACTED SUBGRADE. SEE DETAIL 32/CC501.

NORTH

GRAPHIC SCALE

20 0 10 20 40

1 INCH = 20 FT.

rrm design group
rrmdesign.com | (805) 543-1794
3765 SOUTH HIGUERA STREET, SUITE 102
SAN LUIS OBISPO, CA 93401

THE INCLUDED DRAWINGS, SPECIFICATIONS, IDEAS, DESIGNS AND ARRANGEMENTS REPRESENTED THEREBY ARE AND SHALL REMAIN THE PROPERTY OF RRM DESIGN GROUP AND NO PART THEREOF SHALL BE COPIED, DISCLOSED TO OTHERS OR USED IN CONNECTION WITH ANY WORK OR PROJECT OTHER THAN THE SPECIFIED PROJECT FOR WHICH THEY HAVE BEEN PREPARED AND DEVELOPED WITHOUT THE WRITTEN CONSENT OF RRM DESIGN GROUP. VISUAL CONTACT WITH THESE DRAWINGS OR OTHERWISE RECEIVING THEM SHALL CONSTITUTE ACCEPTANCE OF THE ABOVE RESTRICTIONS. SUBMITTAL OF THESE DOCUMENTS FOR PUBLIC AGENCY REVIEW SHALL NOT BE CONSIDERED A WAIVER OF RRM DESIGN GROUP'S RIGHTS.
RRM DESIGN GROUP COPYRIGHT 2023.
RRM IS A CALIFORNIA CORPORATION

REGISTERED PROFESSIONAL ENGINEER
WA VANG
No. C 80967
08/30/2024
CIVIL
STATE OF CALIFORNIA

CONSULTANT

LANE ENGINEERS INC.
CIVIL • STRUCTURAL • SURVEYING
979 N. BLACKSTONE STREET
TULARE, CALIFORNIA 93274
(559) 688-5263
www.laneengineers.com

AGENCY

FOURTH ST COMMUNITY CENTER AND PARK

HENDERSON AVE., PORTERVILLE, CA 93257

SITE PAVING PLAN

NO.	REVISION	DATE
1	PLAN CHEK REVISION 1	5/17/24

PROJECT MANAGER
LANCE WIERSCHEM

DRAWN BY	CHECKED BY
W.V.	A.P.O.

DATE
2024.01.15

PROJECT NUMBER
2883-01-RC22

SHEET
CS102

PLAN CHECK REVISION 1

LANE PROJECT NO. 22306

J:\Jobs\2022\22306\Dwg\Production Drawings\C5_Paving Plan.dwg, CS102, Aug 30, 2024 1:11pm, wa

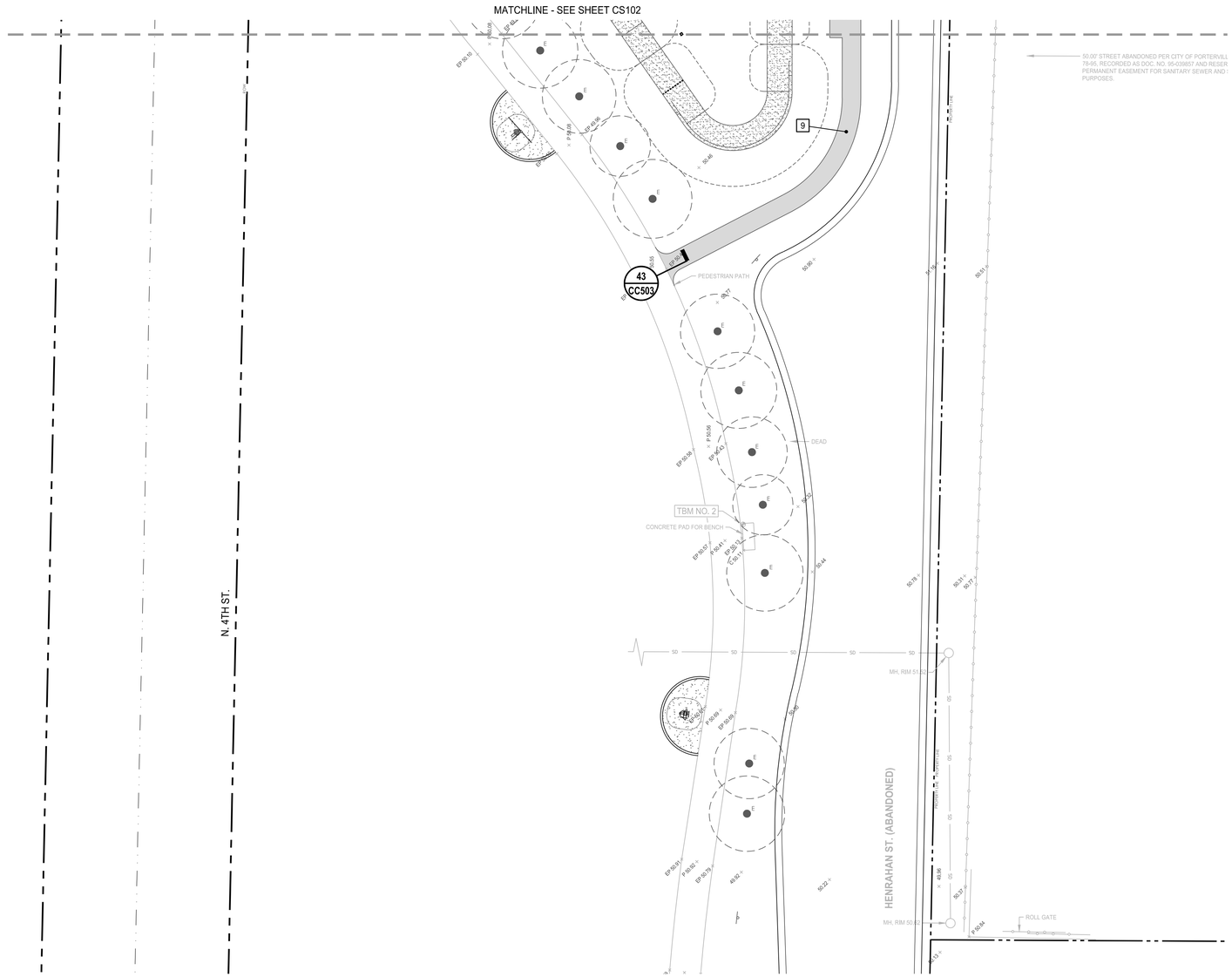

NOTES

1. REFER TO SHEETS C001 & C002 FOR GENERAL NOTES, INFORMATION, AND SPECIFICATIONS.
2. APPROXIMATE CONCRETE PAVEMENT JOINT LOCATIONS ARE SHOWN ON THIS DRAWING. CONTRACTOR SHALL USE EXPERIENCE AND BEST JUDGEMENT TO DETERMINE ACTUAL JOINT LOCATIONS IN THE FIELD.
3. JOINTS SHALL BE SPACED A MAXIMUM OF 10'.
4. INSTALL ISOLATION JOINTS AT ALL LOCATIONS WHERE EXTERIOR CONCRETE ABUTS CONCRETE SLABS OR FOOTINGS FOR BUILDING STRUCTURES.
5. WHERE POSSIBLE, ALL CURB & GUTTER AND LANDSCAPE CURB CONTRACTION JOINTS SHALL BE PLACED TO ALIGN WITH PARKING LOT PAVEMENT JOINTING PATTERN.
6. SEE OFFSITE IMPROVEMENTS SHEET CC101-CC102 FOR OFFSITE PAVEMENT REPAIR REQUIREMENTS.

PAVING LEGEND

- NEW CONCRETE SIDEWALK, FLATWORK AND MISCELLANEOUS CONCRETE
- NEW CONCRETE PAVEMENT
- NEW ASPHALT PAVEMENT
- PROPERTY BOUNDARY

CONSTRUCTION KEYNOTES

(SHEETS CS101 - CS103)

1. CONCRETE SIDEWALK AND WALKWAYS. SEE SHEETS CH101-CH103 FOR MORE INFORMATION.
2. REINFORCED CONCRETE PAVEMENT AT PARKING STALLS: (6" P.C.C. / 4" CL 2 A.B. / 8" C.S.G.) SEE DETAIL 11/CC501. PAVEMENT SHALL BE REINFORCED WITH #4 EA. WAY. AT 24 " O.C.
3. PARKING SPACES: 3" A.C. OVER 6" CLASS 2 AGGREGATE BASE OVER 8" COMPACTED SUBGRADE. SEE DETAIL 32/CC501.
4. DRIVE AISLES: 3.5" A.C. OVER 9" CLASS 2 AGGREGATE BASE OVER 8" COMPACTED SUBGRADE. SEE DETAIL 32/CC501.
5. CONSTRUCTION OR CONTROL JOINTS (10' O.C MAX.), TYP. SEE DETAILS 21/CC501 & 31/CC501.
6. CONST. THICKENED CONCRETE PAVEMENT EDGE WHERE CONCRETE DOES NOT ABUT CURB, TYP. SEE DETAIL 43/CC501.
7. CONSTRUCT ISOLATION JOINT WHERE CONCRETE PAVING ABUTS BUILDING CONCRETE, TYP. SEE DETAIL 14/CC501.
8. REINFORCED CONCRETE PAVEMENT: (6" P.C.C. / 6" CL 2 A.B. / 8" C.S.G.) SEE DETAIL 11/CC501.
9. A.C. SIDEWALK: 2" A.C. OVER 4" CLASS 2 AGGREGATE BASE OVER 8" COMPACTED SUBGRADE. SEE DETAIL 32/CC501.

NORTH

GRAPHIC SCALE

20 0 10 20 40

1 INCH = 20 FT.

rrm design group
rrmdesign.com | (805) 543-1794
3765 SOUTH HIGUERA STREET, SUITE 102
SAN LUIS OBISPO, CA 93401

THE INCLUDED DRAWINGS, SPECIFICATIONS, IDEAS, DESIGNS AND ARRANGEMENTS REPRESENTED THEREBY ARE AND SHALL REMAIN THE PROPERTY OF RRM DESIGN GROUP AND NO PART THEREOF SHALL BE COPIED, DISCLOSED TO OTHERS OR USED IN CONNECTION WITH ANY WORK OR PROJECT OTHER THAN THE SPECIFIED PROJECT FOR WHICH THEY HAVE BEEN PREPARED AND DEVELOPED WITHOUT THE WRITTEN CONSENT OF RRM DESIGN GROUP. VISUAL CONTACT WITH THESE DRAWINGS OR OTHER PERSONS THAN THE PERSON FOR WHOM THE WORK IS TO BE PERFORMED IS RESTRICTED. SUBMITTAL OF THESE DOCUMENTS FOR PUBLIC AGENCY REVIEW SHALL NOT BE CONSIDERED A WAIVER OF RRM DESIGN GROUP'S RIGHTS.
RRM DESIGN GROUP COPYRIGHT 2023.
RRM IS A CALIFORNIA CORPORATION

REGISTERED PROFESSIONAL ENGINEER
WA VANG
RCE: 80967
08/30/2024
CIVIL
STATE OF CALIFORNIA

CONSULTANT

LANE ENGINEERS INC.
CIVIL • STRUCTURAL • SURVEYING
979 N. BLACKSTONE STREET
TULARE, CALIFORNIA 93274
(559) 688-5263
www.laneengineers.com

AGENCY

FOURTH ST COMMUNITY CENTER AND PARK

HENDERSON AVE., PORTERVILLE, CA 93257

SITE PAVING PLAN

NO.	REVISION	DATE
1	PLAN CHEK REVISION 1	5/17/24

PROJECT MANAGER
LANCE WIERSCHEM

DRAWN BY	CHECKED BY
W.V.	A.P.O.

DATE
2024.01.15

PROJECT NUMBER
2883-01-RC22

SHEET
CS103

PLAN CHECK REVISION 1

LANE PROJECT NO. 22306

J:\Labs\2022\22306\Dwg\Production Drawings\C5_Paving Plan.dwg, CS103, Aug 30, 2024 1:11pm, wa

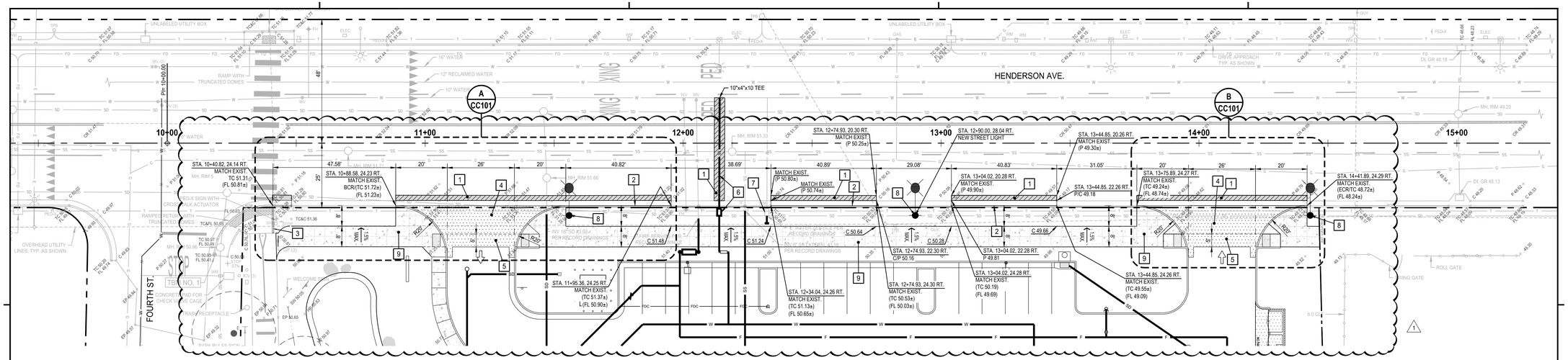

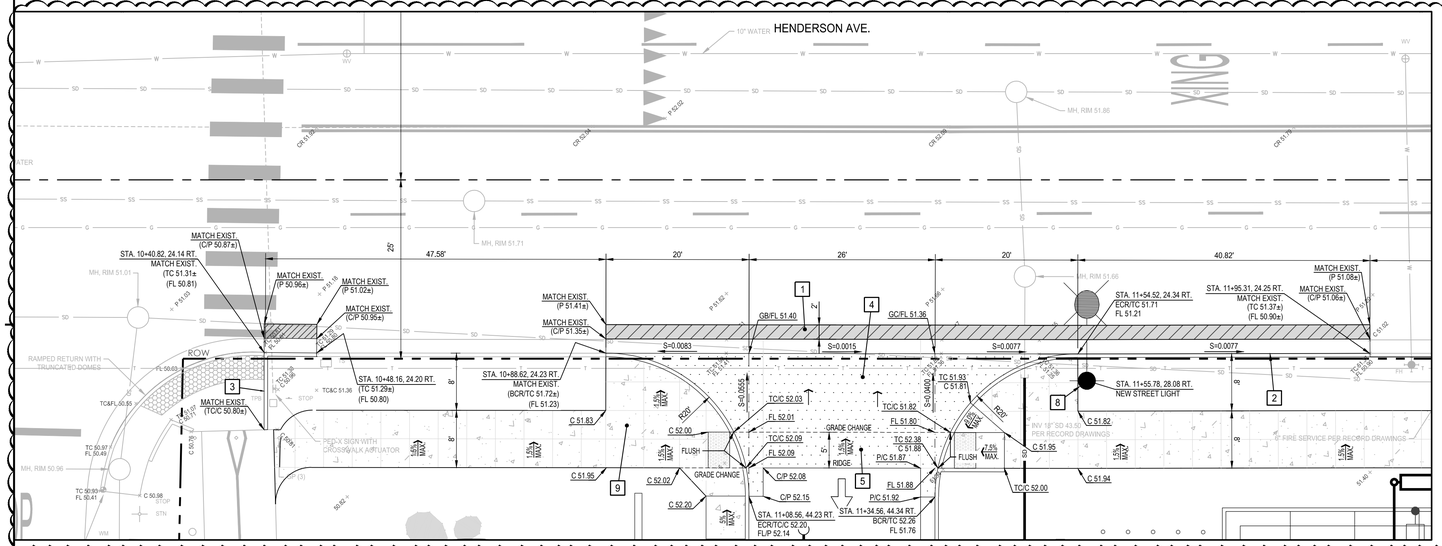

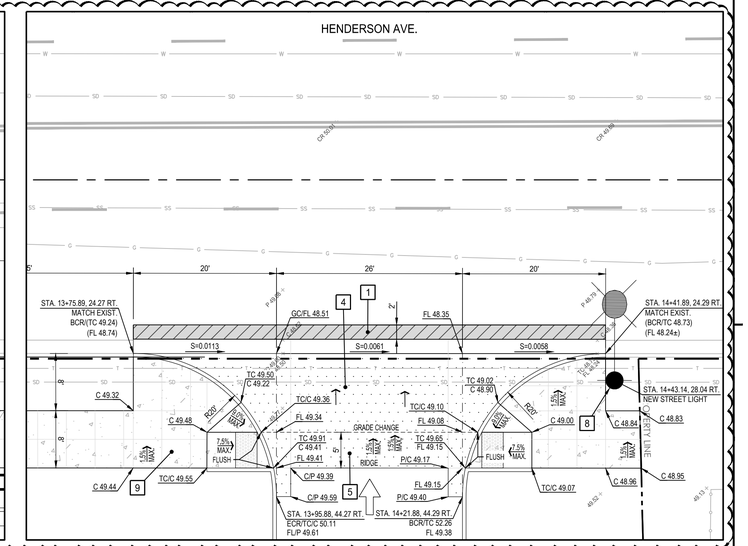

A ENLARGED GRADING PLAN

SCALE: 1"=10'

NORTH

B ENLARGED GRADING PLAN

SCALE: 1"=10'

NORTH

OFFSITE NOTES

1. REFER TO SHEET C001 FOR BENCHMARKS, GENERAL NOTES & INFORMATION.
2. FIELD VERIFY ALL ELEVATIONS SHOWN WHERE PROPOSED IMPROVEMENTS ABUT EXISTING IMPROVEMENTS. IMMEDIATELY NOTIFY PROJECT ARCHITECT OF ANY DISCREPANCIES.
3. SEE SHEET CD101 OFF-SITE DEMOLITION.
4. ADJUST ALL EXISTING MANHOLES, GATE VALVES, UTILITY BOXES, AND WATER METERS TO BE FLUSH WITH FINISH GRADES.
5. ALL WORK AND MATERIALS WITHIN THE STREET RIGHTS OF WAY SHALL CONFORM TO CITY OF PORTERVILLE STANDARDS AND SPECIFICATIONS.
6. COORDINATES SHOWN ARE BASED ON THE CALIFORNIA COORDINATE SYSTEM, ZONE 4, NAD 83, AS DETERMINED BY GPS OBSERVATIONS RELATIVE TO THE CALIFORNIA SURVEYING AND DRAFTING, INC. VIRTUAL SURVEY NETWORK, EPOCH DATE 2011.

LEGEND

- NEW CONCRETE SIDEWALK, FLATWORK AND MISCELLANEOUS CONCRETE
- NEW CONCRETE PAVEMENT
- ASPHALT PAVEMENT REPAIR
- PROPERTY BOUNDARY
- SD — NEW STORM DRAIN PIPING
- SS — NEW SEWER PIPING
- W — NEW WATER PIPING
- F — NEW FIRE WATER PIPING
- FDC — NEW FDC PIPING

CONSTRUCTION KEYNOTES (THIS SHEET ONLY)

1. ASPHALT CONCRETE PAVEMENT REPAIR SIMILAR TO CITY STANDARD DETAIL P-10 ON SHEET CC505.
   PAVEMENT REPAIR SHOWN THUS:
2. RE-CONSTRUCT CONCRETE CURB AND GUTTER PER CITY STANDARD DETAIL C-1. SEE SHEET CC505
3. CONSTRUCT CITY STANDARD C-3 BARRIER CURB. SEE SHEET CC505
4. CONSTRUCT DRIVE APPROACH SIMILAR TO CITY STANDARD C-22 MAJOR COMMERCIAL DRIVE APPROACH, SEE SHEET CC505. SEE DETAILS THIS SHEET FOR GRADES AT DRIVE APPROACH.
5. CONSTRUCT 6" THICK CONCRETE SIDEWALK BEHIND DRIVE APPROACH PER CITY STANDARD DETAIL C-22 ON SHEET CC505.
6. CONSTRUCT NEW METERED 4" DOMESTIC WATER SERVICE LINE. SEE CITY STANDARD DETAIL W-6 ON SHEET CC507 FOR ADDITIONAL REQUIREMENTS.
7. EXISTING 2" METER AND SERVICE LINE TO SERVE IRRIGATION SYSTEM. SEE ONSITE SHEET CU101 AND IRRIGATION PLANS FOR CONTINUATION.
8. CONSTRUCT NEW STREET LIGHT PER CITY STANDARD U-2 FOR ARTERIAL STREET. SEE SHEET CC505 & CC508 FOR DETAILS. CONTRACTOR SHALL COORDINATE WITH CITY OF PORTERVILLE AND SOUTHERN CALIFORNIA EDISON FOR DESIGN AND INSTALLATION REQUIREMENTS.
9. CONSTRUCT 8' WIDE SIDEWALK SIMILAR TO CITY STANDARD C-7 ON SHEET CC505.

NORTH

GRAPHIC SCALE

20 0 10 20 40

1 INCH = 20 FT.

rrm design group
rrmdesign.com | (805) 543-1794
3765 SOUTH HIGUERA STREET, SUITE 102
SAN LUIS OBISPO, CA 93401

THE INCLUDED DRAWINGS, SPECIFICATIONS, IDEAS, DESIGNS AND ARRANGEMENTS REPRESENTED THEREBY ARE AND SHALL REMAIN THE PROPERTY OF RRM DESIGN GROUP AND NO PART THEREOF SHALL BE COPIED, DISCLOSED TO OTHERS OR SUBSTANTIALLY USED FOR ANY PURPOSE WHATSOEVER OTHER THAN THE PROJECT FOR WHICH THEY HAVE BEEN PREPARED AND DEVELOPED WITHOUT THE WRITTEN CONSENT OF RRM DESIGN GROUP. VISUAL CONTACT WITH THESE DRAWINGS AND SPECIFICATIONS SHALL CONSTITUTE PROOF OF ACCEPTANCE OF THE ABOVE RESTRICTIONS. SUBMITTAL OF THESE DOCUMENTS FOR PUBLIC AGENCY REVIEW SHALL NOT BE CONSIDERED A WAIVER OF RRM DESIGN GROUP'S RIGHTS.
RRM DESIGN GROUP COPYRIGHT 2023.
RRM IS A CALIFORNIA CORPORATION

REGISTERED PROFESSIONAL ENGINEER
WA VANG
C-22306
08/30/2024
CIVIL
STATE OF CALIFORNIA

CONSULTANT

LANE ENGINEERS INC.
CIVIL • STRUCTURAL • SURVEYING
979 N. BLACKSTONE STREET
TULARE, CALIFORNIA 93274
(559) 688-5263
www.laneengineers.com

AGENCY

FOURTH ST COMMUNITY CENTER AND PARK

HENDERSON AVE., PORTERVILLE, CA 93257

HENDERSON AVENUE IMPROVEMENT PLAN

NO.	REVISION	DATE
1	PLAN CHEK REVISION 1	5/17/24

PROJECT MANAGER
LANCE WIERSCHEM

DRAWN BY: W.V.
CHECKED BY: A.P.O.

DATE
2024.01.15

PROJECT NUMBER
2883-01-RC22

SHEET
CC101

PLAN CHECK REVISION 1

LANE PROJECT NO. 22306

J:\Jobs\2022\22306\Dwg\Production Drawings\C6_Henderson Improvement Plan.dwg, CC101, Aug 30, 2024 1:12pm, wa

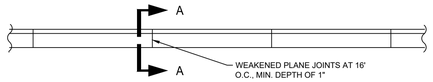

PLAN

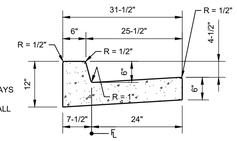

SECTION A-A

NOTES:

1. BARRIER TYPE CURB & GUTTER SHALL HAVE A MIN. GRADIENT OF 0.15' PER 100 FEET.
2. ALL CONCRETE SHALL BE 2500PSI MIN. AT 28 DAYS
3. A WEAKENED PLANE JOINT OR COLD JOINT SHALL BE INSTALLED AT THE END OF CURB RETURNS AND AT CENTER LINE OF PROPOSED DRIVE APPROACHES.
4. CURB AND GUTTER SHALL BE PLACED ON MOIST AND COMPACTED BASE MATERIALS (90% RELATIVE COMPACTION).
5. ALL EXPOSED SURFACES OF CURB & GUTTER SHALL NOT VARY IN EXCESS OF 0.02' WHEN A 10' STRAIGHT EDGE IS PLACED ON THE SURFACE, EXCEPT AT GRADE CHANGES OR CURVES.

CONCRETE CURB AND GUTTER — NO SCALE — 41

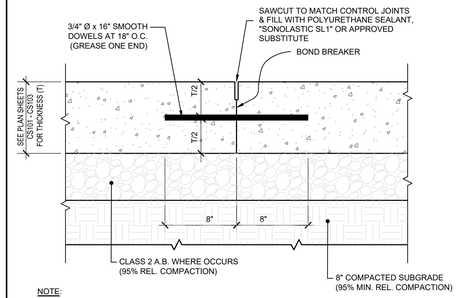

NOTE:

CONSTRUCTION JOINTS SHALL BE USED WHEN CONCRETE PAVING OPERATIONS ARE INTERRUPTED, SUCH AS EQUIPMENT BREAKDOWNS, WEATHER, OR WHEN WORK IS ENDED FOR THE DAY.

CONSTRUCTION JOINT — NO SCALE — 31

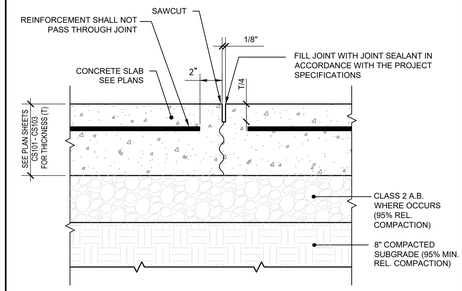

CONTROL JOINT — NO SCALE — 21

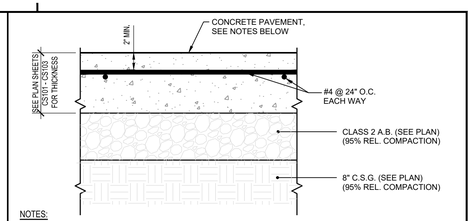

NOTES:

1. CONCRETE PAVEMENT SHALL HAVE A MIN. COMPRESSIVE STRENGTH OF 4,000 PSI AT 28 DAYS. 4" MAX. SLUMP. SEE PROJECT SPECIFICATIONS.
2. MAXIMUM WATER/CEMENT RATIO SHALL BE 0.50 AND A SLUMP LIMIT OF 5 INCHES MAXIMUM.
3. JOINT SPACING AND CONSTRUCTION JOINT SHALL BE AS NOTED ON SHEETS CS101-CS103.
4. ALL CONCRETE SURFACES SHALL RECEIVE A MEDIUM TEXTURED BROOM FINISH. DRAW A SOFT-BRISTLE BROOM ACROSS FLOAT-FINISHED CONCRETE SURFACE PERPENDICULAR TO LINE OF TRAFFIC TO PROVIDE A UNIFORM, FINE-LINE TEXTURE.
5. GROUND SURFACE TO RECEIVE CONCRETE DRIVEWAYS OR BITUMINOUS PAVEMENTS SHALL BE SCARIFIED TO A MINIMUM DEPTH OF 12 INCHES BELOW THE GRADING PLANE IN CUT AREAS OR 12 INCHES IN AREAS TO RECEIVE FILL. ENGINEER FILL SHALL BE COMPACTED TO A MINIMUM OF 90 PERCENT OF THE MAXIMUM DENSITY AS OBTAINED BY ASTM TEST METHOD D1557 AND SHALL EXTEND A MINIMUM OF TWO (2) FEET BEYOND THE OUTSIDE EDGES OF PAVEMENT. THE TOP EIGHT (8) INCHES OF SUBGRADE BELOW THE GRADING PLANE SHALL BE COMPACTED TO A MINIMUM OF 95%.
6. SEE PROJECT SPECIFICATION AND GEOTECHNICAL INVESTIGATION REPORT BY SOILS ENGINEERING, INC. (SEI FILE 22-18633, DATED JANUARY 13, 2023) FOR PAVEMENT SUBGRADE PREPARATION REQUIREMENTS.

NO SCALE

REINF. CONCRETE PAVING SECTION — 11

PROVIDE 3/8" CHAIN AND PADLOCKS FOR EACH GATE VALVE TO PREVENT UNAUTHORIZED OPERATION.

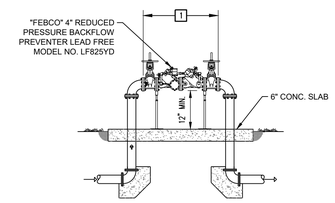

NOTES:
1. REDUCE PRESSURE PRINCIPLE ASSEMBLY.
2. EXPOSE PIPING TO BE INSULATED.
3. ALL FLANGED FITTINGS WHICH ARE BURIED SHALL HAVE PLASTIC WRAP, 30 MIL.

NO SCALE

4" DOMESTIC BACKFLOW PREVENTER — 42

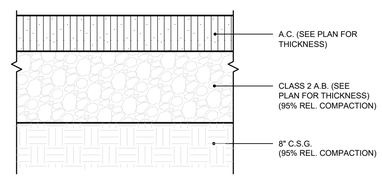

NOTES:

1. A.C. PAVEMENT SHALL BE COMPACTED TO 91% TO 97% (CTM 375, ASTM D2950 OR EQUIVALENT)
2. ALL ONSITE ASPHALT CONCRETE PAVING SHALL CONFORM TO SECTION 28 (HOT MIX ASPHALT) OF THE CITY OF PORTERVILLE ENGINEERING STANDARD SPECIFICATIONS, LATEST EDITION.
3. ON-SITE A.C. PAVEMENT SHALL BE TYPE "B" WITH 1/2" AGGREGATE GRADATION.
4. GROUND SURFACE TO RECEIVE CONCRETE DRIVEWAYS OR BITUMINOUS PAVEMENTS SHALL BE SCARIFIED TO A MINIMUM DEPTH OF 12 INCHES BELOW THE GRADING PLANE IN CUT AREAS OR 12 INCHES IN AREAS TO RECEIVE FILL. ENGINEER FILL SHALL BE COMPACTED TO A MINIMUM OF 90 PERCENT OF THE MAXIMUM DENSITY AS OBTAINED BY ASTM TEST METHOD D1557 AND SHALL EXTEND A MINIMUM OF TWO (2) FEET BEYOND THE OUTSIDE EDGES OF PAVEMENT. THE TOP EIGHT (8) INCHES OF SUBGRADE BELOW THE GRADING PLANE SHALL BE COMPACTED TO A MINIMUM OF 95%.
5. SEE PROJECT SPECIFICATION AND GEOTECHNICAL INVESTIGATION REPORT BY SOILS ENGINEERING, INC. (SEI FILE 22-18633, DATED JANUARY 13, 2023) FOR PAVEMENT SUBGRADE PREPARATION REQUIREMENTS.

ASPHALT CONCRETE PAVEMENT — NO SCALE — 32

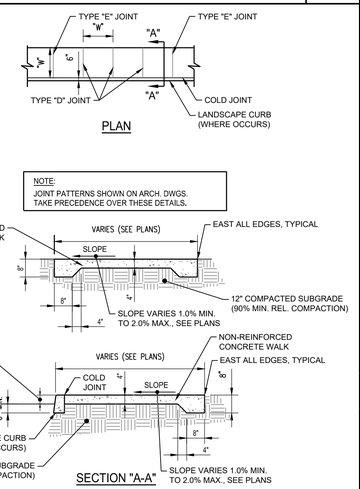

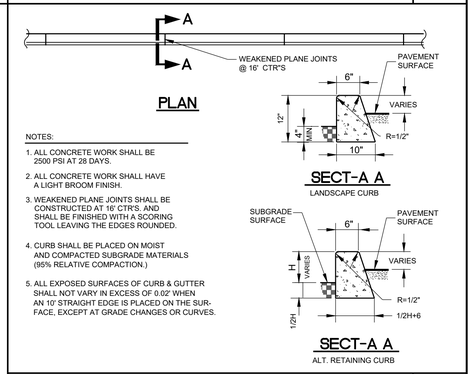

NOTES:

1. ALL CONCRETE WORK SHALL BE 2500 PSI AT 28 DAYS.
2. ALL CONCRETE WORK SHALL HAVE A LIGHT BROOM FINISH.
3. WEAKENED PLANE JOINTS SHALL BE CONSTRUCTED AT 16' CTR'S. AND SHALL BE FINISHED WITH A SCORING TOOL LEAVING THE EDGES ROUNDED.
4. CURB SHALL BE PLACED ON MOIST AND COMPACTED SUBGRADE MATERIALS (95% RELATIVE COMPACTION.)
5. ALL EXPOSED SURFACES OF CURB & GUTTER SHALL NOT VARY IN EXCESS OF 0.02' WHEN AN 10' STRAIGHT EDGE IS PLACED ON THE SURFACE, EXCEPT AT GRADE CHANGES OR CURVES.

LANDSCAPE BARRIER CURB — NO SCALE — 12

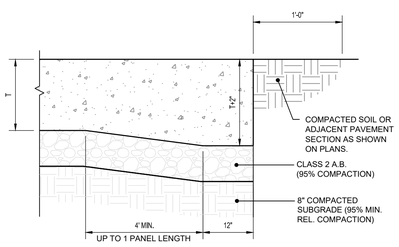

THICKENED EDGE — NO SCALE — 43

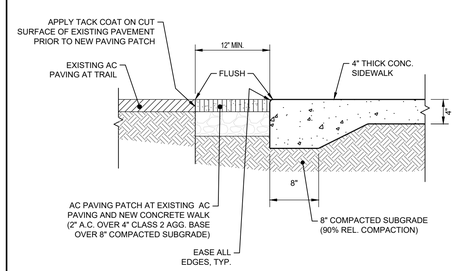

NO SCALE

AC PAVING PATCH AT CONCRETE WALK — 33

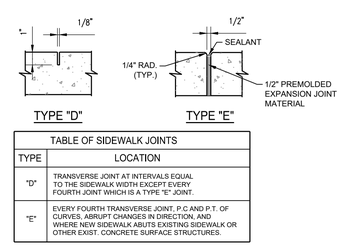

TABLE OF SIDEWALK JOINTS	
TYPE	LOCATION
"D"	TRANSVERSE JOINT AT INTERVALS EQUAL TO THE SIDEWALK WIDTH EXCEPT EVERY FOURTH JOINT WHICH IS A TYPE "E" JOINT.
"E"	EVERY FOURTH TRANSVERSE JOINT, P.C AND P.T. OF CURVES, ABRUPT CHANGES IN DIRECTION, AND WHERE NEW SIDEWALK ABUTS EXISTING SIDEWALK OR OTHER EXIST. CONCRETE SURFACE STRUCTURES.

NOTES:

1. TYPE "D" JOINT MAY BE EITHER TOOLED IN WET CONCRETE OR SAWCUT WITHIN 18 HOURS OF PLACEMENT OF CONCRETE.
2. SIDEWALKS LOCATED IN STREET RIGHTS-OF-WAY SHALL CONFORM TO CITY STANDARDS AND SPECIFICATIONS.
3. EXCAVATE EARTH MATERIAL TO A MINIMUM DEPTH OF 12 INCHES BELOW EXISTING GRADE OR ONE (1) FOOT BELOW THE BOTTOM OF PROPOSED CONCRETE IMPROVEMENTS, WHICHEVER IS DEEPER. WORK TO LINES AT LEAST TWO (2) FEET BEYOND CONCRETE EDGES.
4. THE TOP EIGHT (8") INCHES OF MATERIALS EXPOSED AT THE BOTTOM OF THE EXCAVATION SHALL BE SCARIFIED AND COMPACTED TO A MINIMUM OF 90 PERCENT OF ASTM D1557.
5. MOISTEN EXCAVATED AND IMPORTED SOILS TO NEAR OPTIMUM MOISTURE CONSISTENT WITH EFFECTIVE COMPACTION AND SOIL STABILITY. COMPACT MOISTENED SOILS TO A MINIMUM OF 90 PERCENT OF THE MAXIMUM DENSITY OBTAINED BY ASTM TEST METHOD D1557.
6. THE UPPER 12 INCHES OF FINISHED SUBGRADE SHALL BE NON-EXPANSIVE SOIL (EXPANSION INDEX LESS THAN 20). THE ON-SITE SOIL WITH EXPANSION INDEX GREATER THAN 20 MUST BE PLACED 2 FEET BELOW FINISHED SUBGRADE.
7. THE BOTTOM OF EXCAVATION SHALL BE REVIEWED AND APPROVED BY THE PROJECT GEOTECHNICAL ENGINEER PRIOR TO ANY BACKFILL OPERATIONS. ADDITIONAL EXCAVATION AND FILL PLACEMENT MAY BE REQUIRED AT THE DISCRETION OF THE PROJECT GEOTECHNICAL ENGINEER.
8. SEE PROJECT SPECIFICATION AND GEOTECHNICAL INVESTIGATION REPORT BY SOILS ENGINEERING, INC. (SEI FILE 22-18633, DATED JANUARY 13, 2023) FOR ADDITIONAL REQUIREMENTS.

NO SCALE

SIDEWALK & FLATWORK CONSTRUCTION — 24

NOTES:

1. BACKFILL TO A DEPTH OF 12" OVER TOP OF PIPE. FILL SHALL BE PLACED BY HAND AND TAMPED (90% REL. COMPACTION). FOR PLASTIC PIPE INSTALLATIONS, BEDDING SHALL BE IN ACCORDANCE W/PIPE MANUF. SPECIFICATIONS.
2. BACKFILL MATERIAL WITHIN THE HAUNCHING, INITIAL BACKFILL, AND OUTER BEDDING AREAS SHALL BE CATEGORY I, II, OR III MATERIAL (ASTM D2321) PLACED TO 90% REL. COMPACTION.
5. SEE PROJECT SPECIFICATION AND GEOTECHNICAL INVESTIGATION REPORT BY SOILS ENGINEERING, INC. (SEI FILE 22-18633, DATED JANUARY 13, 2023) FOR ADDITIONAL BACKFILL REQUIREMENTS.

(ON SITE)

TRENCH BACKFILL AND PAVING — NO SCALE — 13

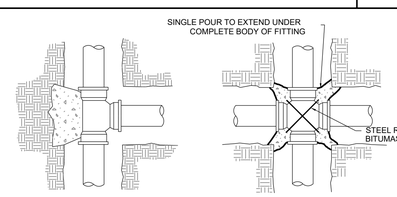

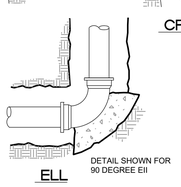

THRUST BLOCK REQUIRED BEARING AREA – TOTAL SQUARE FEET						
TYPE OF FITTING		ELL			TEE & CAPS	CROSS
		22-1/2"	45"	90"		
SIZE OF PIPE	4"	1	2	3	2	3
	6"	1	2	4	3	4
	8"	2	4	7	5	7
	10"	3	6	12	8	12

THRUST BLOCK NOTES:

1. Thrust blocks to be constructed of Class 3 concrete.
2. Areas given are for thickness class 50 ductile iron pipe at Pressure of 150 p.s.i. in soil with 2,000 p.s.f. bearing capacity.
3. Blocks to be poured against undisturbed native soil.
4. Joints to be kept clear of concrete.
5. Minimum thickness of thrust blocks to be 6 inches.

CONCRETE THRUST BLOCK — NO SCALE — 34

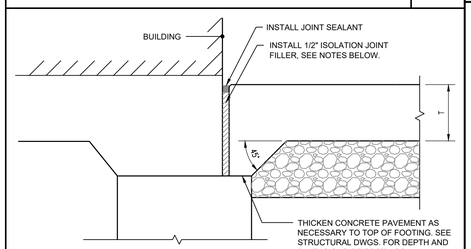

NOTES:

1. ISOLATION JOINT FILLER SHALL MEET THE REQUIREMENTS OF ASTM D 1751, ASPHALT-SATURATED CELLULOSIC FIBER IN PRE-FORMED STRIPS.
2. EXTEND JOINT FILLERS FULL WIDTH AND DEPTH OF JOINT.
3. TERMINATE JOINT FILLER NOT LESS THAN 1/2 INCH OR MORE THAN 1 INCH BELOW FINISHED SURFACE IF JOINT SEALANT IS INDICATED.
4. PLACE TOP OF JOINT FILLER FLUSH WITH FINISHED CONCRETE SURFACE IF JOINT SEALANT IS NOT INDICATED.
5. INSTALL ISOLATION JOINTS AT ALL LOCATIONS WHERE EXTERIOR CONCRETE PAVEMENT ABUTS BUILDING CONCRETE.

ISOLATION JOINT AT BUILDING — NO SCALE — 14

rrm design group
rrmdesign.com | (805) 543-1794
3765 SOUTH HIGUERA STREET, SUITE 102
SAN LUIS OBISPO, CA 93401

THE INCLUDED DRAWINGS, SPECIFICATIONS, IDEAS, DESIGNS AND ARRANGEMENTS REPRESENTED THEREBY ARE AND SHALL REMAIN THE PROPERTY OF RRM DESIGN GROUP AND NO PART THEREOF SHALL BE COPIED, DISCLOSED TO OTHERS OR USED IN CONNECTION WITH ANY WORK OR PROJECT OTHER THAN THE SPECIFIC PROJECT FOR WHICH THEY HAVE BEEN PREPARED AND DEVELOPED WITHOUT THE WRITTEN CONSENT OF RRM DESIGN GROUP. VISUAL CONTACT WITH THESE DRAWINGS OR OTHERWISE RECEIVING THESE DOCUMENTS CONSTITUTES THE ACCEPTANCE OF THESE RESTRICTIONS. SUBMITTAL OF THESE DOCUMENTS FOR PUBLIC AGENCY REVIEW SHALL NOT BE CONSIDERED A WAIVER OF RRM DESIGN GROUP'S RIGHTS.
RRM DESIGN GROUP COPYRIGHT 2023.
RRM IS A CALIFORNIA CORPORATION

REGISTERED PROFESSIONAL ENGINEER — W. VANS — C.E. C. 60567 — 08/30/2024 — CIVIL — STATE OF CALIFORNIA

CONSULTANT

LANE ENGINEERS INC.
CIVIL • STRUCTURAL • SURVEYING
979 N. BLACKSTONE STREET
TULARE, CALIFORNIA 93274
(559) 688-5263
www.laneengineers.com

AGENCY

FOURTH ST COMMUNITY CENTER AND PARK

HENDERSON AVE., PORTERVILLE, CA 93257

CIVIL DETAILS

NO.	REVISION	DATE
1	PLAN CHEK REVISION 1	5/17/24

PROJECT MANAGER: LANCE WIERSCHEM
DRAWN BY: W.V. — CHECKED BY: A.P.O.
DATE: 2024.01.15
PROJECT NUMBER: 2883-01-RC22
SHEET: CC501

PLAN CHECK REVISION 1

LANE PROJECT NO. 22306

J:\Jobs\2022\22306\Dwg\Production Drawings\C7_Details.dwg, CC501, Aug 30, 2024 1:12pm, wa

NOTE:
1. CONTRACTOR SHALL CONTACT AUTHORITIES HAVING JURISDICATION AND VERIFY IMPOUNDMENT YARD INFORMATION.

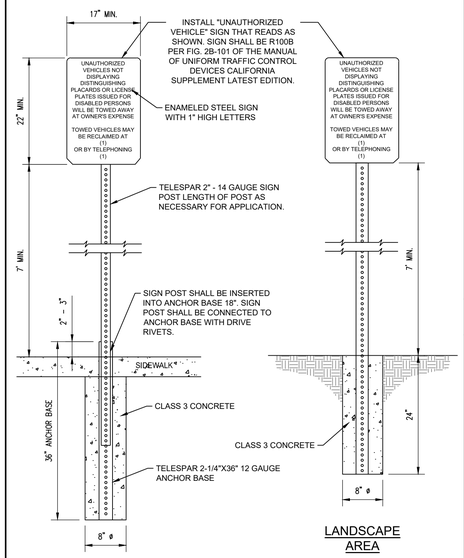

IN SIDEWALK

LANDSCAPE AREA

NOTE:
1. WHERE SIGN IS LOCATED NEAR DRIVE AISLES AND ENTRANCES SIGN SHALL BE A MINIMUM OF 3' AWAY FROM ANY CURB FACE OR EDGE OF A TRAVELED WAY.

UNAUTHORIZED VEHICLE SIGN — NO SCALE — 42

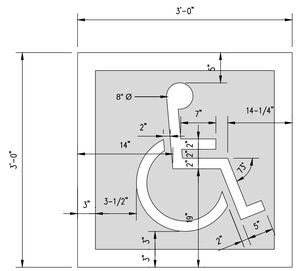

COLOR OF SYMBOL. THE SYMBOL SPECIFIED ABOVE SHALL CONSIST OF A WHITE FIGURE ON A BLUE BACKGROUND. THE BLUE SHALL BE EQUAL TO COLOR NO. 15090 IN FEDERAL STANDARD 599B.

PARKING SPACE EMBLEM — NO SCALE — 31

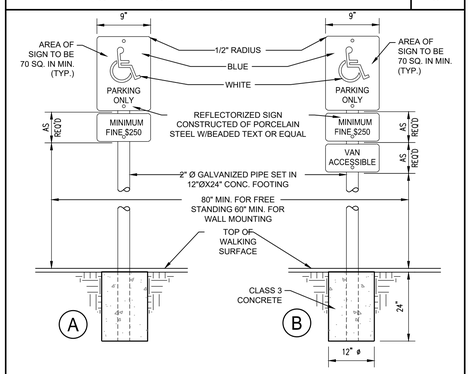

ACCESSIBILITY SIGN — NO SCALE — 32

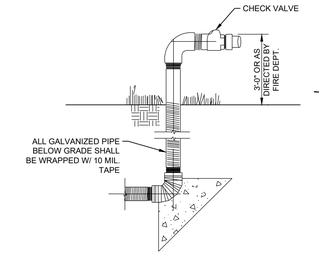

SECTION A-A
NO SCALE

NOTE:
*PUMPER CONNECTION SHALL BE NO MORE THAN 50' FROM FIRE HYDRANT.

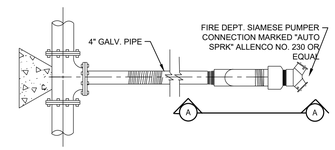

PLAN VIEW
NO SCALE

FDC CONNECTION — NO SCALE — 22

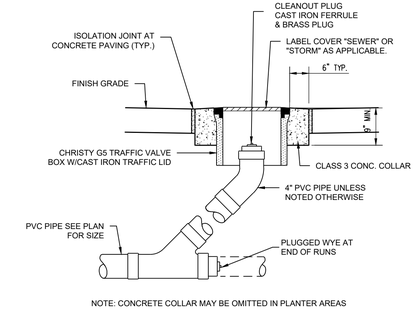

NOTE: CONCRETE COLLAR MAY BE OMITTED IN PLANTER AREAS

CLEANOUT TO GRADE — NO SCALE — 11

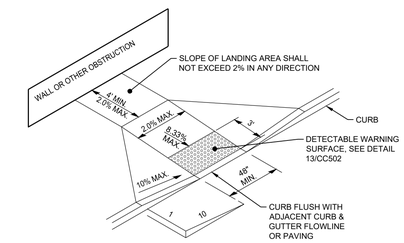

CURB CUT RAMP

NOTES:
1. RAMP CONCRETE SHALL HAVE A MINIMUM THICKNESS OF 4".

ACCESSIBIITY RAMP — NO SCALE — 12

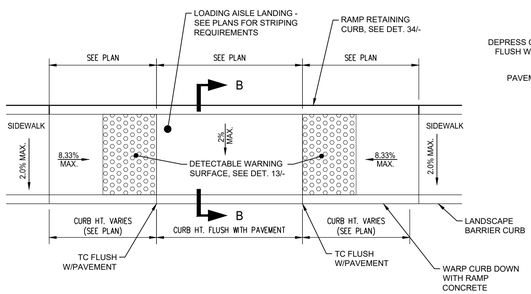

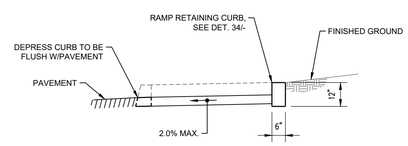

SECTION B-B

NOTES:
1. RAMP CONCRETE SHALL HAVE A MINIMUM THICKNESS OF 4".
2. ALL VISIBLE EDGES OF RETAINING CURB SHALL HAVE 1/2" RADII.
3. SEE GRADING PLAN SHEETS FOR GRADES.
4. THE LANDING SHALL BE LESS THAN 2.0% IN ANY DIRECTION.

PASSENGER DROP-OFF AND LOADING AISLE — NO SCALE — 33

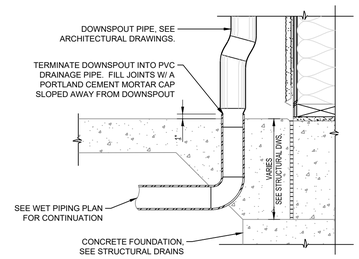

DOWNSPOUT CONNECTION — NO SCALE — 23

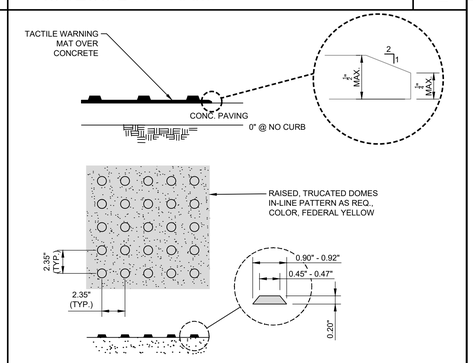

TACTILE WARNING MAT — NO SCALE — 13

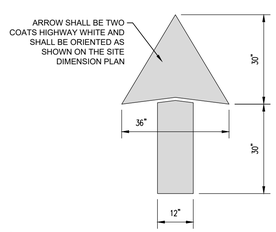

NOTE:
1. PAVEMENT ARROW SHOWN ABOVE SHALL BE USED OR APPROVED EQUAL.

NO SCALE

DIRECTIONAL PAVEMENT ARROW — 44

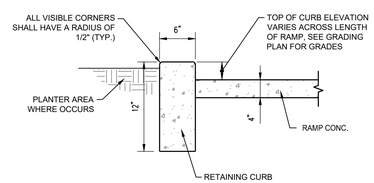

NOTES:
1. ALL CONCRETE SHALL BE 2500 PSI MIN. AT 28 DAYS
2. SEE GRADING PLAN FOR GRADES.

RAMP RETAINING CURB — NO SCALE — 34

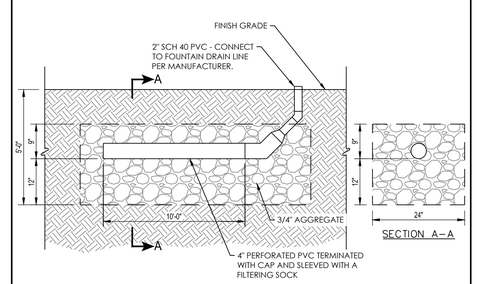

DRAIN AT DRINKING FOUNTAIN — NO SCALE — 24

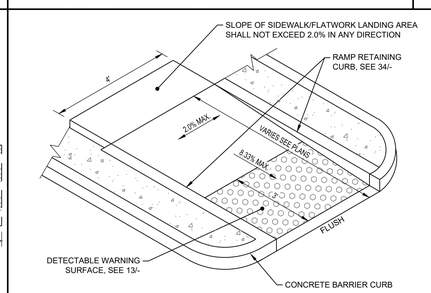

NOTES:
1. RAMP CONCRETE SECTION SHALL HAVE MINIMUM THICKNESS OF 4"
2. LANDING SHALL BE 4' MIN. IN THE DIRECTION OF TRAVEL ABOVE THE RAMP.
3. SEE GRADING PLAN FOR GRADES.

ACCESSIBIITY RAMP — NO SCALE — 14

rrm design group
rrmdesign.com | (805) 543-1794
3765 SOUTH HIGUERA STREET, SUITE 102
SAN LUIS OBISPO, CA 93401

THE INCLUDED DRAWINGS, SPECIFICATIONS, IDEAS, DESIGNS AND ARRANGEMENTS REPRESENTED THEREBY ARE AND SHALL REMAIN THE PROPERTY OF RRM DESIGN GROUP AND NO PART THEREOF SHALL BE COPIED, DISCLOSED TO OTHERS OR USED IN CONNECTION WITH ANY WORK OR PROJECT OTHER THAN THE SPECIFIED PROJECT FOR WHICH THEY HAVE BEEN PREPARED AND DEVELOPED WITHOUT THE WRITTEN CONSENT OF RRM DESIGN GROUP. VISUAL CONTACT WITH THESE DRAWINGS OR OTHERWISE RECEIVING THESE DOCUMENTS CONSTITUTES THE ACCEPTANCE OF RESTRICTIONS. SUBMITTAL OF THESE DOCUMENTS FOR PUBLIC AGENCY REVIEW SHALL NOT BE CONSIDERED A WAIVER OF RRM DESIGN GROUP'S RIGHTS.
RRM DESIGN GROUP COPYRIGHT 2023.
RRM IS A CALIFORNIA CORPORATION

REGISTERED PROFESSIONAL ENGINEER — WA VANG — C.E. 80967 — 08/30/2024 — CIVIL — STATE OF CALIFORNIA

CONSULTANT

LANE ENGINEERS INC.
CIVIL • STRUCTURAL • SURVEYING
979 N. BLACKSTONE STREET
TULARE, CALIFORNIA 93274
(559) 688-5263
www.laneengineers.com

AGENCY

FOURTH ST COMMUNITY CENTER AND PARK
HENDERSON AVE., PORTERVILLE, CA 93257

CIVIL DETAILS

NO.	REVISION	DATE
1	PLAN CHEK REVISION 1	5/17/24

PLAN CHECK REVISION 1

PROJECT MANAGER: LANCE WIERSCHEM
DRAWN BY: W.V. — CHECKED BY: A.P.O.
DATE: 2024.01.15
PROJECT NUMBER: 2883-01-RC22
SHEET: CC502

LANE PROJECT NO. 22306

J:\Jobs\2022\22306\Dwg\Production Drawings\C7_Details.dwg, CC502, Aug 30, 2024 1:12pm, wa

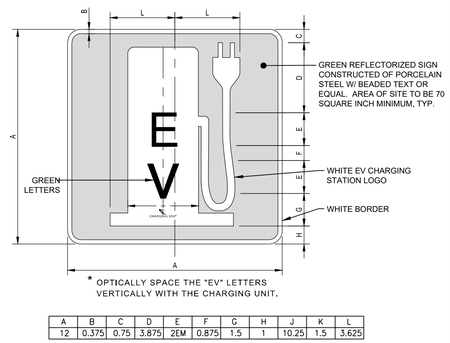

A	B	C	D	E	F	G	H	J	K	L
12	0.375	0.75	3.875	2EM	0.875	1.5	1	10.25	1.5	3.625

COLORS: BORDERS & SYMBOL - WHITE (RETROREFLECTIVE)
LEGEND & BACKGROUND - GREEN (RETROREFLECTIVE)

ENLARGED EV PARKING SIGN NO SCALE 41

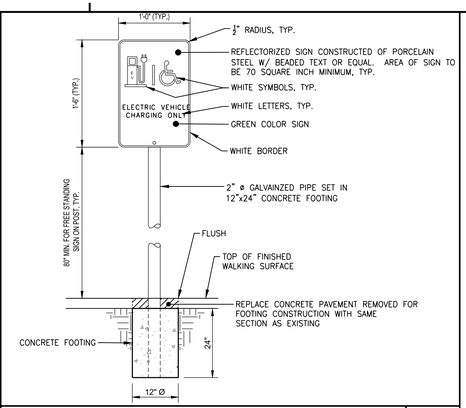

EV ACCESSIBLE PARKING SIGN NO SCALE 31

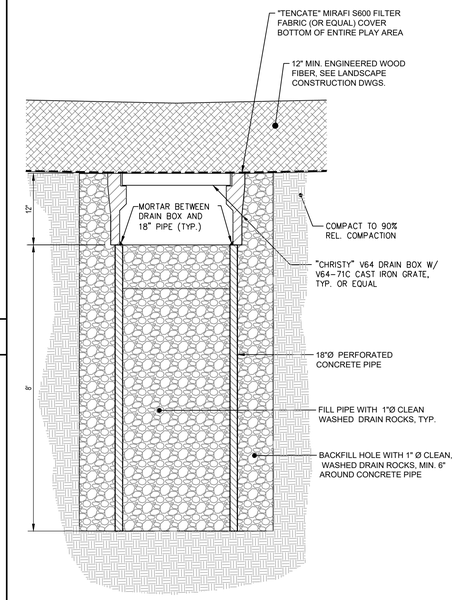

PLAY AREA DRY-WELL NO SCALE 22

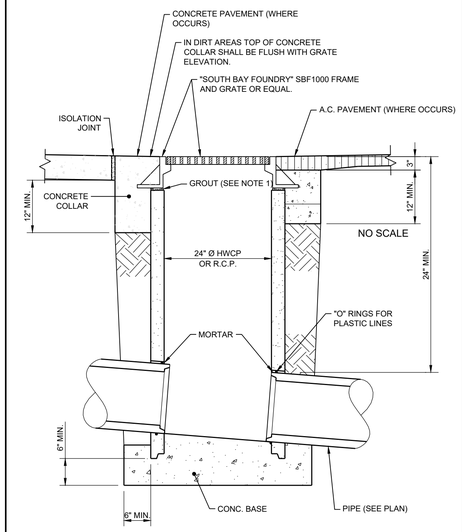

NOTES
1. GROUT SHALL BE A HIGH STRENGTH, SHRINKAGE COMPENSATING NON-METALLIC GROUT, "MASTERFLOW" 713 OR EQUAL.
2. CONCRETE SHALL BE 2500 PSI MIN. AT 28 DAYS.
3. FRAME AND GRATE SHALL MEET H20 WHEEL LOAD REQUIREMENTS.

DRAIN INLET NO SCALE 12

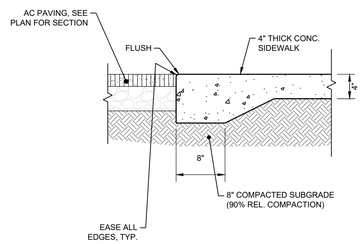

NO SCALE

SECTION AT NEW AC PAVING/CONCRETE 42

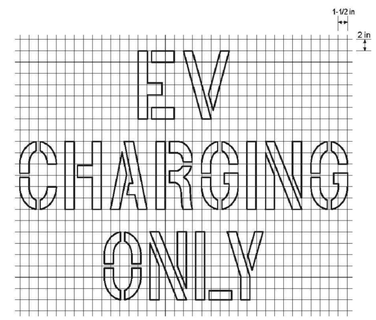

EV PARKING SPACE MARKING NO SCALE 32

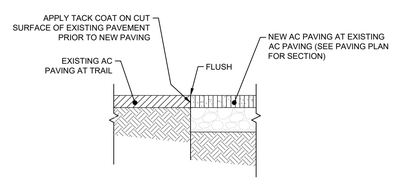

NEW AC PAVING AT EXISTING NO SCALE 43

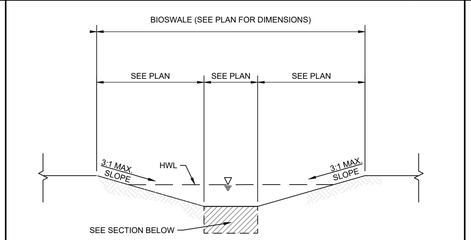

CROSS SECTION

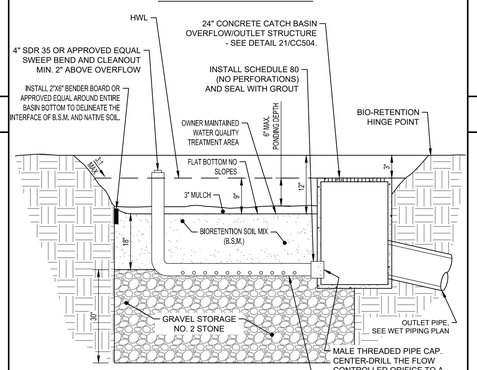

NOTES:
1. BIORETENTION SOIL MIX (B.S.M) SHALL BE 60 TO 70% SAND, 15 TO 25% COMPOST
2. STONE MATERIAL SHALL BE WASHED, OPEN-GRADED (NO SAND), CRUSHED (ANGULAR) AGGREGATE
3. NATIVE SOIL BENEATH INFILTRATION BED SHALL BE OVER-EXCAVATED A MINIMUM OF 1.0' AND REPLACED UNIFORMLY WITHOUT COMPACTION
4. INSTALL BENDER BOARD WITH 12" REDWOOD STAKE, ON B.S.M. SIDE, AT 4' CENTERS. SPLICE BENDER BOARD WITH 1"X4"X24" SPLICE BOARD. PROVIDE 2" OF EXPOSED BENDER BOARD ABOVE B.S.M.

BIORETENTION SECTION NO SCALE 34

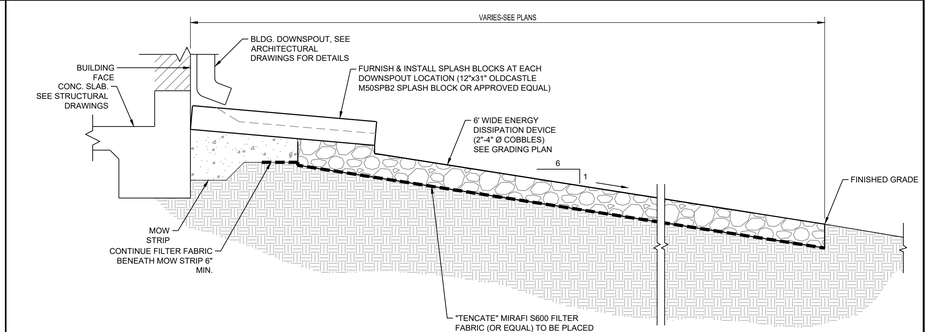

DOWNSPOUT SPLASH BLOCK & ENERGY DISSIPATION DEVICE NO SCALE 13

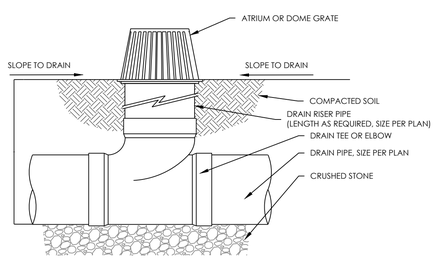

ATRIUM DOME GRATE NO SCALE 44

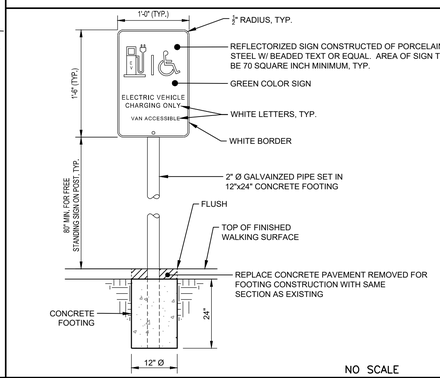

NO SCALE

"VAN ACCESSIBLE" EV PARKING SIGN 24

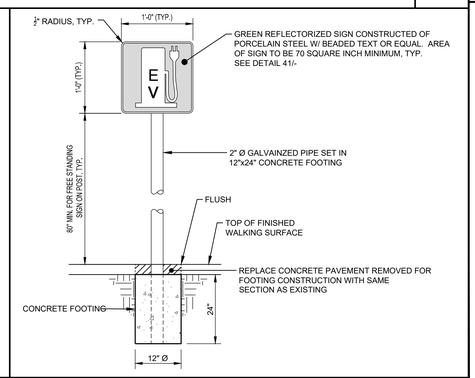

TYPICAL EV PARKING SIGN NO SCALE 14

rrm design group
rrmdesign.com | (805) 543-1794
3765 SOUTH HIGUERA STREET, SUITE 102
SAN LUIS OBISPO, CA 93401

THE INCLUDED DRAWINGS, SPECIFICATIONS, IDEAS, DESIGNS AND ARRANGEMENTS REPRESENTED THEREBY ARE AND SHALL REMAIN THE PROPERTY OF RRM DESIGN GROUP AND NO PART THEREOF SHALL BE COPIED, DISCLOSED TO OTHERS OR USED IN CONNECTION WITH ANY WORK OR PROJECT OTHER THAN THE SPECIFIED PROJECT FOR WHICH THEY HAVE BEEN PREPARED AND DEVELOPED WITHOUT THE WRITTEN CONSENT OF RRM DESIGN GROUP. VISUAL CONTACT WITH THESE DRAWINGS OR SPECIFICATIONS SHALL CONSTITUTE CONCLUSIVE EVIDENCE OF ACCEPTANCE OF THESE RESTRICTIONS. SUBMITTAL OF THESE DOCUMENTS FOR PUBLIC AGENCY REVIEW SHALL NOT BE CONSIDERED A WAIVER OF RRM DESIGN GROUP'S RIGHTS.
RRM DESIGN GROUP COPYRIGHT 2023.
RRM IS A CALIFORNIA CORPORATION

REGISTERED PROFESSIONAL ENGINEER
WA VANG
C-36067
08/30/2024
CIVIL
STATE OF CALIFORNIA

CONSULTANT

LANE ENGINEERS INC.
CIVIL • STRUCTURAL • SURVEYING
979 N. BLACKSTONE STREET
TULARE, CALIFORNIA 93274
(559) 688-5263
www.laneengineers.com

AGENCY

FOURTH ST COMMUNITY CENTER AND PARK
HENDERSON AVE., PORTERVILLE, CA 93257

CIVIL DETAILS

NO.	REVISION	DATE
1	PLAN CHEK REVISION 1	5/17/24

PLAN CHECK REVISION 1

PROJECT MANAGER: LANCE WIERSCHEM
DRAWN BY: W.V.
CHECKED BY: A.P.O.
DATE: 2024.01.15
PROJECT NUMBER: 2883-01-RC22
SHEET: CC503

LANE PROJECT NO. 22306

J:\Jobs\2022\22306\Dwg\Production Drawings\C7_Details.dwg, CC503, Aug 30, 2024 1:12pm, wa

NOT USED

41

NOT USED

31

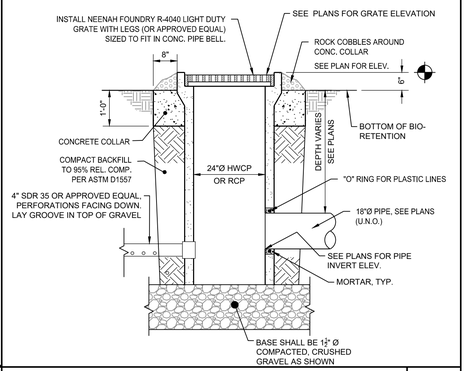

BIOSWALE OVERFLOW INLET NO SCALE 21

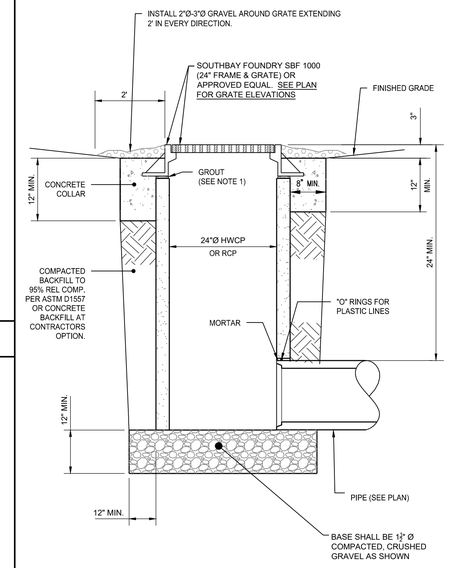

NOTES:

1. GROUT SHALL BE A HIGH STRENGTH, SHRINKAGE COMPENSATING, NON-METALLIC GROUT, "MASTERFLOW" 713 OR EQUAL.
2. CONCRETE SHALL BE CLASS 2,500 PSI MIN. AT 28 DAYS.

NOT USED

42

NOT USED

32

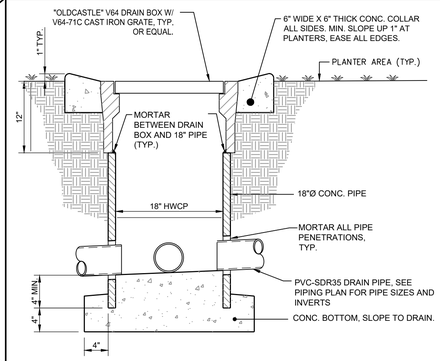

PLANTER DRAIN INLET NO SCALE 22

BIOSWALE DRAIN INLET NO SCALE 12

NOT USED

43

NOT USED

33

NOT USED

23

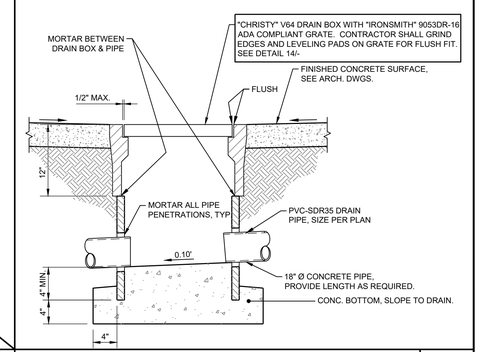

AREA DRAIN INLET W/ ADA GRATE NO SCALE 13

NOT USED

44

NOT USED

34

NOT USED

24

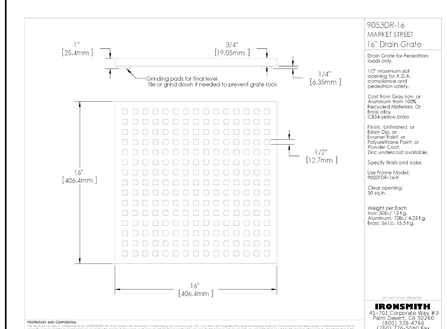

ADA COMPLIANT DI GRATE NO SCALE 14

PLAN CHECK REVISION 1

rrm design group

rrmdesign.com | (805) 543-1794
3765 SOUTH HIGUERA STREET, SUITE 102
SAN LUIS OBISPO, CA 93401

THE INCLUDED DRAWINGS, SPECIFICATIONS, IDEAS, DESIGNS AND ARRANGEMENTS REPRESENTED THEREBY ARE AND SHALL REMAIN THE PROPERTY OF RRM DESIGN GROUP AND NO PART THEREOF SHALL BE COPIED, DISCLOSED TO OTHERS OR USED IN CONNECTION WITH ANY WORK OR PROJECT OTHER THAN THE SPECIFIED PROJECT FOR WHICH THEY HAVE BEEN PREPARED AND DEVELOPED WITHOUT THE WRITTEN CONSENT OF RRM DESIGN GROUP. VISUAL CONTACT WITH THESE DRAWINGS OR OTHER PROJECT DOCUMENTS SHALL CONSTITUTE PROOF OF ACCEPTANCE OF THESE RESTRICTIONS. SUBMITTAL OF THESE DOCUMENTS FOR PUBLIC AGENCY REVIEW SHALL NOT BE CONSIDERED A WAIVER OF RRM DESIGN GROUP'S RIGHTS.
RRM DESIGN GROUP COPYRIGHT 2023.
RRM IS A CALIFORNIA CORPORATION

REGISTERED PROFESSIONAL ENGINEER
WA VANG
C.E. 80967
08/30/2024
CIVIL
STATE OF CALIFORNIA

CONSULTANT

LANE ENGINEERS INC.
CIVIL • STRUCTURAL • SURVEYING
979 N. BLACKSTONE STREET
TULARE, CALIFORNIA 93274
(559) 688-5263
www.laneengineers.com

AGENCY

FOURTH ST COMMUNITY CENTER AND PARK

HENDERSON AVE., PORTERVILLE, CA 93257

CIVIL DETAILS

NO.	REVISION	DATE
1	PLAN CHEK REVISION 1	5/17/24

PROJECT MANAGER
LANCE WIERSCHEM

DRAWN BY	CHECKED BY
W.V.	A.P.O.

DATE
2024.01.15

PROJECT NUMBER
2883-01-RC22

SHEET
CC504

LANE PROJECT NO. 22306

J:\Jobs\2022\22306\Dwg\Production Drawings\C7_Details.dwg, CC504, Aug 30, 2024 1:12pm, wa

J:\Jobs\2022\22306\Dwg\Production Drawings\C7_Details.dwg, CC504, Aug 30, 2024 1:12pm, wa

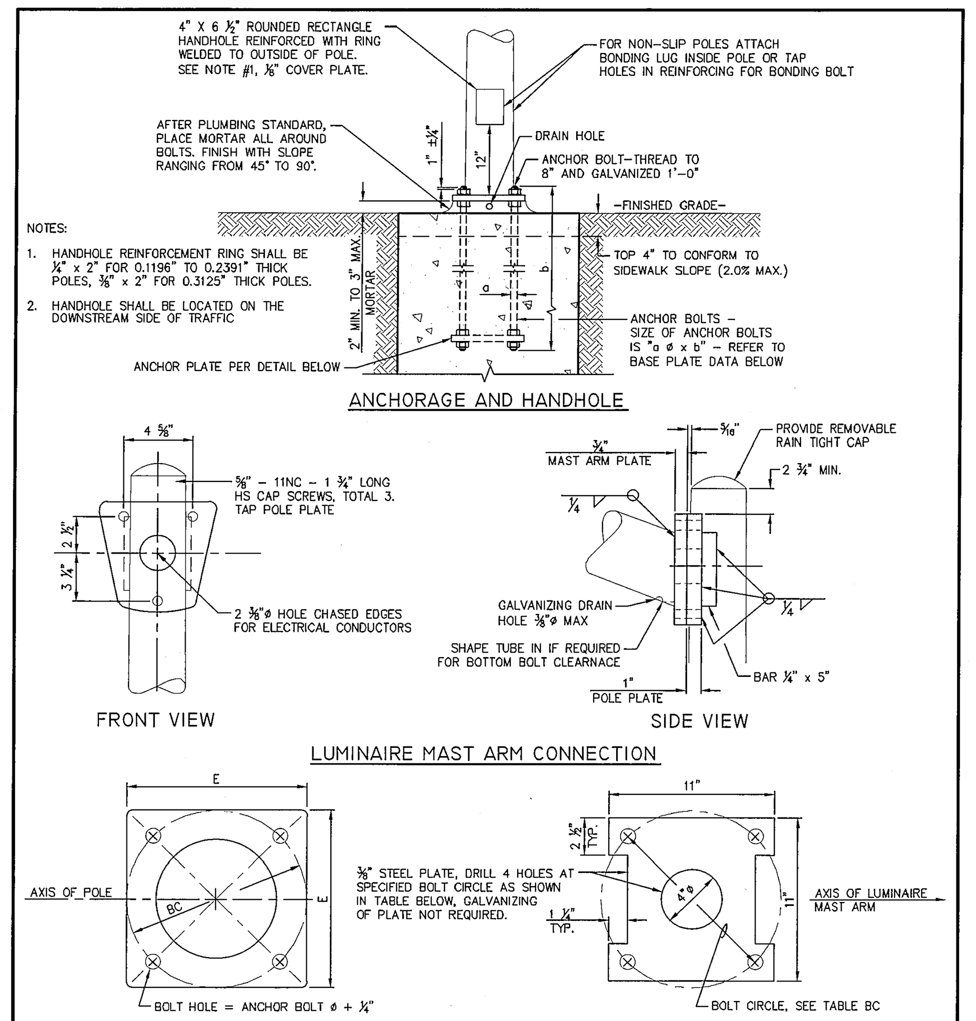

BASE PLATE DATA

POLE TYPE	E	BC = BOLT CIRCLE	THICKNESS	ANCHOR BOLT SIZE (a ø x b)
15	1'–0"	1'–0"	2"	1"ø x 3'–0"
20				1 ¼"ø x 3'–0"

BASE PLATE

TABLE BC

POLE TYPE	BC = BOLT CIRCLE	ANCHOR BOLT DIAMETER	COUPLING NUT BASIC LENGTH	SET SCREW LENGTH
15	1'–0"	1"	3"	1 ½"
20		1 ¼"	3 ¾"	1 ⅞"

ANCHOR PLATE

APPROVED BY: PUBLIC WORKS DIRECTOR R.C.E. 45304 — Date — DATE

STREET LIGHT STANDARD — U–2 2 of 2

NOTES:

1. ALL WORK SHALL CONFORM TO THE APPLICABLE SECTIONS OF THE SPECIFICATIONS ENTITLED: STANDARD SPECIFICATIONS, STATE OF CALIFORNIA, BUSINESS AND TRANSPORTATION AGENCY, DEPARTMENT OF TRANSPORTATION AND NATIONAL ELECTRICAL CODE, AND THESE PROVISIONS.
2. LUMINAIRE WILL BE COBRA HEAD TYPE, 120V HIGH PRESSURE SODIUM–VAPOR. REFER TO CITY STD. T–XX FOR PLACEMENT AND WATTAGE REQUIREMENTS.
3. ALL STREET LIGHTS SHALL BE NUMBERED. REFER TO CITY STD. U–5.
4. THE DEVELOPER SHALL APPLY FOR RULE 16 WITH PG&E.
5. THE CITY SHALL REQUEST STREET LIGHT ACTIVATION WITH PG&E PRIOR TO NOTICE OF COMPLETION.

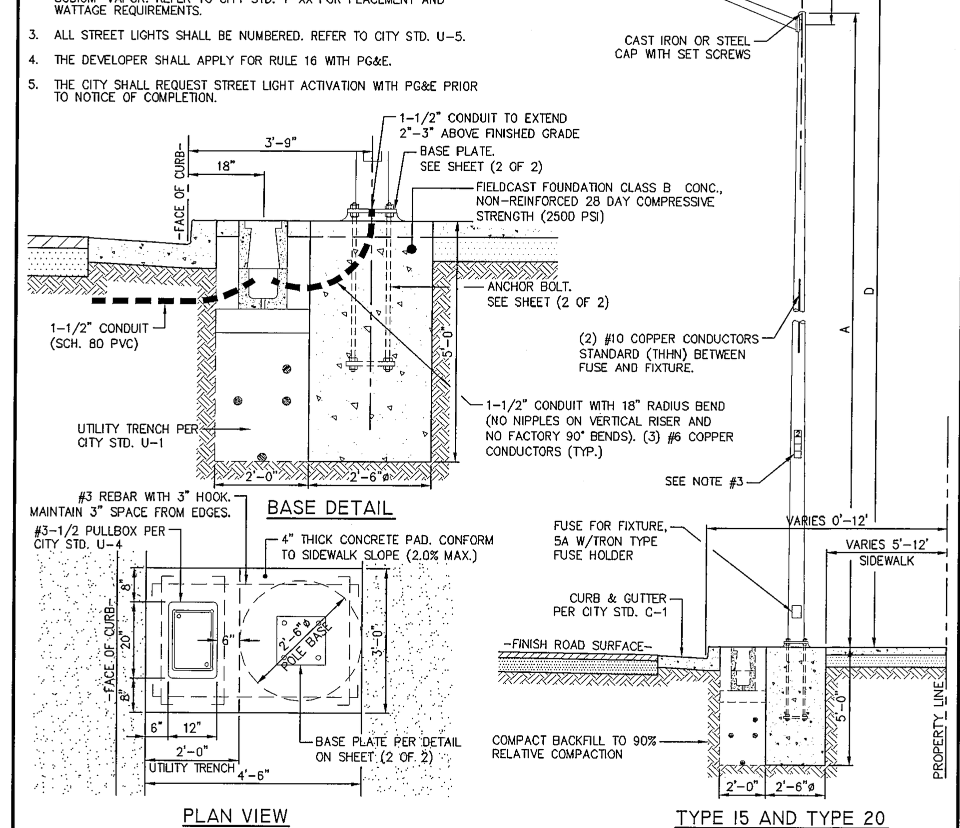

	POLE DATA						LUMINAIRE MAST ARM DATA					
STREET CLASSIFICATION	No. OF LANES	POLE TYPE	A HEIGHT	MINIMUM OD BASE	MINIMUM OD TOP	WALL THICKNESS	B PROJECTED LENGTH	C RISE	MIN. OD AT POLE	NOMINAL THICKNESS	D TYPE 15	D TYPE 21
LOCAL RESIDENTIAL	2	15	30'–0"	8"	3 ¹¹⁄₁₆"	0.1196"	10'–0"	3'–3"±	3 ⅞"	0.1196"	32'–9"±	37'–9"±
LOCAL RESIDENTIAL												
PARKWAY	4											
COLLECTOR	2	20	35'–0"	8 ⅝"	8 ⁹⁄₁₆"	0.1793"	12'–0"	4'–3"±			33'–9"±	38'–9"±
	4											
ARTERIAL	4											
	6											

APPROVED BY: PUBLIC WORKS DIRECTOR R.C.E. 45304 — Date — DATE

STREET LIGHT STANDARD — U–2 1A of 2

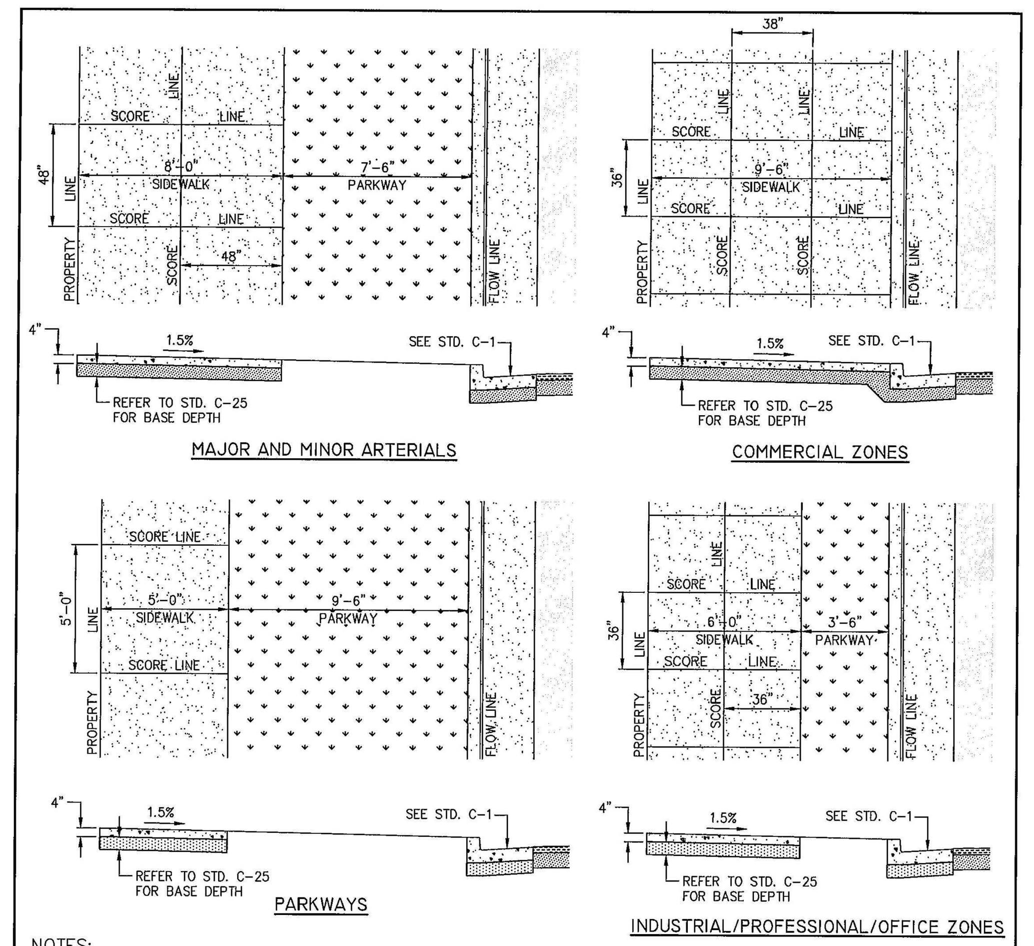

NOTES:

1. CONCRETE WORK SHALL BE 2500 P.S.I. DESIGN (5 SACK MIX). 4" SLUMP ±1".
2. ALL CONCRETE SHALL HAVE A LIGHT BROOM FINISH, EXCEPT AS NOTED.
3. WEAKENED PLANE JOINTS AT END OF CURVE AND BEGINNING OF CURVE OF WALK RETURNS, AT DRIVEWAY APPROACHES, AND AT 15' SPACING, PER STANDARD SPECIFICATIONS. (SEE STD. DWG. C–23, DETAIL D) WEAKENED PLANE JOINTS SHALL BE A MIN. DEPTH OF 1–1/2" AND SHALL BE FINISHED WITH A SCORING TOOL LEAVING THE EDGES ROUNDED.
4. FINISHED SURFACES SHALL BE TREATED WITH CLEAR CURING COMPOUND COMPLYING WITH SECTION 201–4 OF THE STANDARD SPECIFICATIONS.
5. ALIGN SIDEWALK EXPANSION JOINTS, WEAKENED PLANE JOINTS AND SCORE LINES WITH CURB AND GUTTER EXPANSION JOINTS AND WEAKENED PLANE JOINTS.
6. REPAIRS SHALL BE MADE BY REMOVING & REPLACING THE ENTIRE UNIT BETWEEN JOINTS.

APPROVED BY: ENGINEERING & PROJECT MANAGEMENT DIRECTOR — 5/19/2020 — DATE

COMMERCIAL/OFFICE CONCRETE SIDEWALKS AND SIDEWALKS WITH STREET FIXTURE — C–7

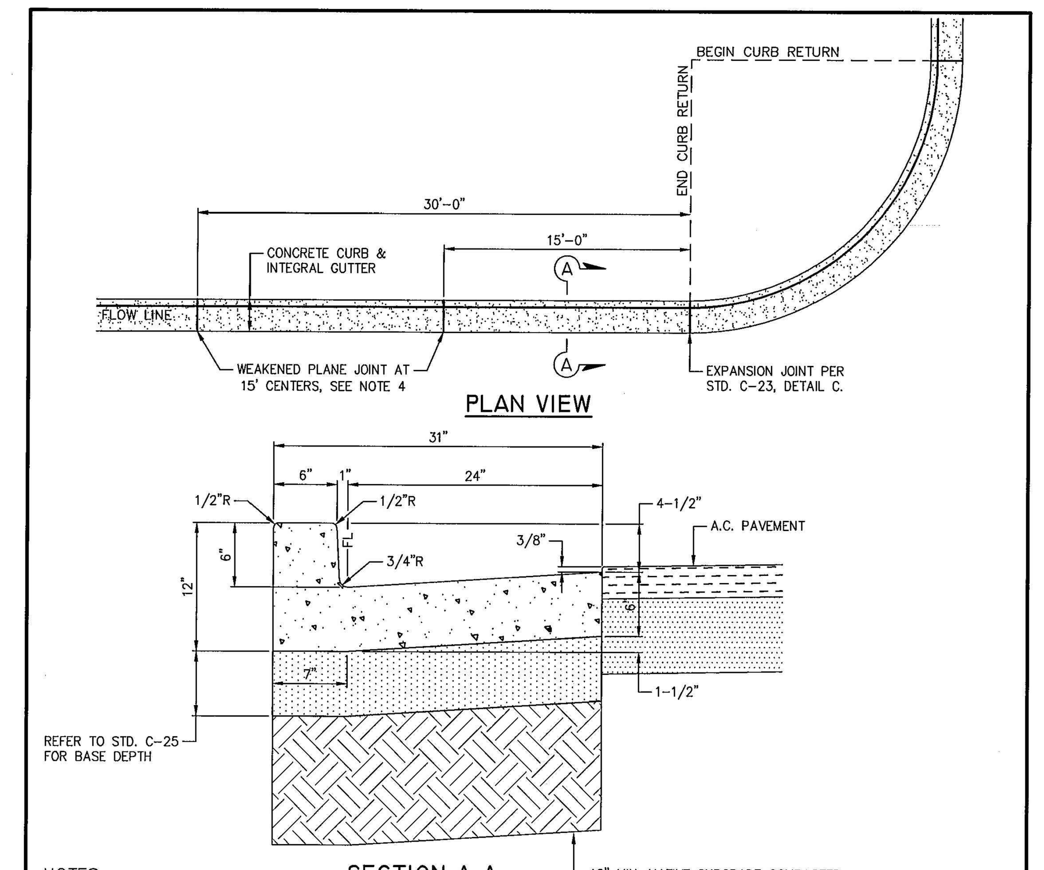

NOTES:

1. CONCRETE WORK SHALL BE 2500 P.S.I. DESIGN (5 SACK MIX). 4" MAX. SLUMP.
2. ALL CONCRETE SHALL HAVE A LIGHT BROOM FINISH, EXCEPT AS NOTED.
3. ALL FORM BOARDS SHALL BE FULL DEPTH AS SHOWN.
4. EXPANSION JOINTS AT CURB RETURN ENDS AND CURVE AT WALK RETURNS.
5. WEAKENED PLANE JOINTS AT DRIVEWAY APPROACHES, AND AT 15' SPACING, PER STANDARD SPECIFICATIONS. (SEE STD. DWG. C–23, DETAIL D). WEAKENED PLANE JOINTS SHALL BE A MIN. DEPTH OF 1–1/2" AND SHALL BE FINISHED WITH A SCORING TOOL LEAVING THE EDGES ROUNDED.
6. FINISHED SURFACES SHALL BE TREATED WITH CLEAR CURING COMPOUND COMPLYING WITH SECTION 201–4 OF THE STANDARD SPECIFICATIONS.
7. EXTRUDED CURB SHALL BE APPROVED BY THE CITY ENGINEER PRIOR TO PLACEMENT. CONCRETE USED FOR EXTRUDED CURB AND GUTTER SHALL HAVE A MAX. SLUMP OF 1–1/2".
8. ALL EXPOSED SURFACES OF CURB AND GUTTER SHALL NOT VARY IN EXCESS OF .02' WHEN AN 8' STRAIGHT EDGE IS PLACED ON THE SURFACE, EXCEPT AT GRADE CHANGES OR CURVES.
9. REPAIRS SHALL BE MADE BY REMOVING & REPLACING THE ENTIRE UNIT BETWEEN JOINTS.

APPROVED BY: ENGINEERING & PROJECT MANAGEMENT DIRECTOR — 5/19/2020 — DATE

BARRIER TYPE CURB AND GUTTER — C–1

rrmdesign.com | (805) 543-1794
3765 SOUTH HIGUERA STREET, SUITE 102
SAN LUIS OBISPO, CA 93401

THE INCLUDED DRAWINGS, SPECIFICATIONS, IDEAS, DESIGNS AND ARRANGEMENTS REPRESENTED THEREBY ARE AND SHALL REMAIN THE PROPERTY OF RRM DESIGN GROUP AND NO PART THEREOF SHALL BE COPIED, DISCLOSED TO OTHERS OR USED IN CONNECTION WITH ANY WORK OR PROJECT OTHER THAN THE SPECIFIED PROJECT FOR WHICH THEY HAVE BEEN PREPARED AND DEVELOPED WITHOUT THE WRITTEN CONSENT OF RRM DESIGN GROUP. VISUAL CONTACT WITH THESE DRAWINGS OR SPECIFICATIONS SHALL CONSTITUTE CONCLUSIVE EVIDENCE OF ACCEPTANCE OF THESE RESTRICTIONS. SUBMITTAL OF THESE DOCUMENTS FOR PUBLIC AGENCY REVIEW SHALL NOT BE CONSIDERED A WAIVER OF RRM DESIGN GROUP'S RIGHTS.
RRM DESIGN GROUP COPYRIGHT 2023.
RRM IS A CALIFORNIA CORPORATION

REGISTERED PROFESSIONAL ENGINEER — WA VANG — R.C.E. 86967 — 08/30/2024 — CIVIL — STATE OF CALIFORNIA

CONSULTANT

LANE ENGINEERS INC.
CIVIL • STRUCTURAL • SURVEYING
979 N. BLACKSTONE STREET
TULARE, CALIFORNIA 93274
(559) 688–5263
www.laneengineers.com

AGENCY

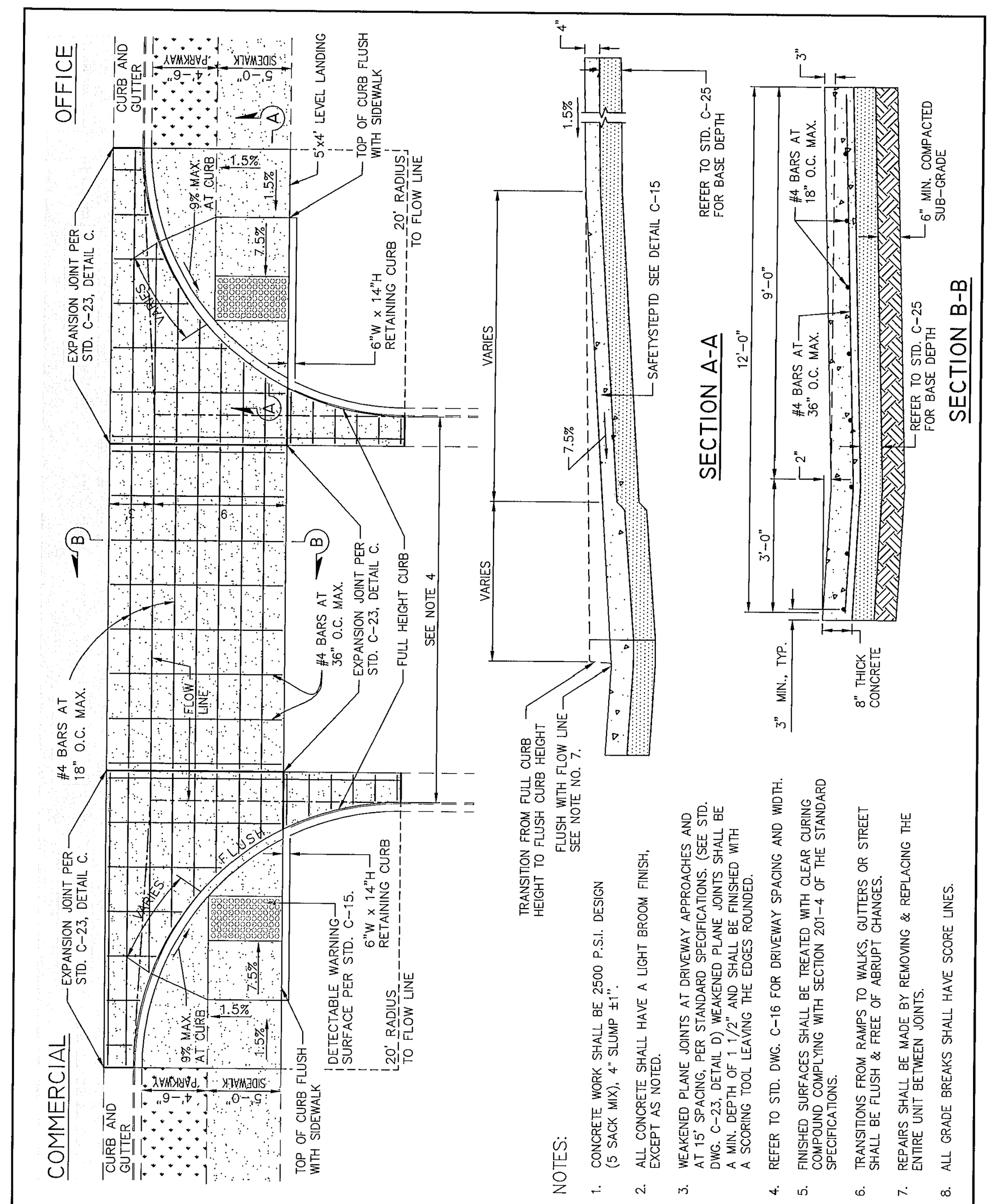

APPROVED BY: ENGINEERING & PROJECT MANAGEMENT DIRECTOR — 5/19/2020 — DATE

MAJOR COMMERCIAL/OFFICE DRIVE APPROACH WITH 20' RADIUS CURB RETURNS — C–22

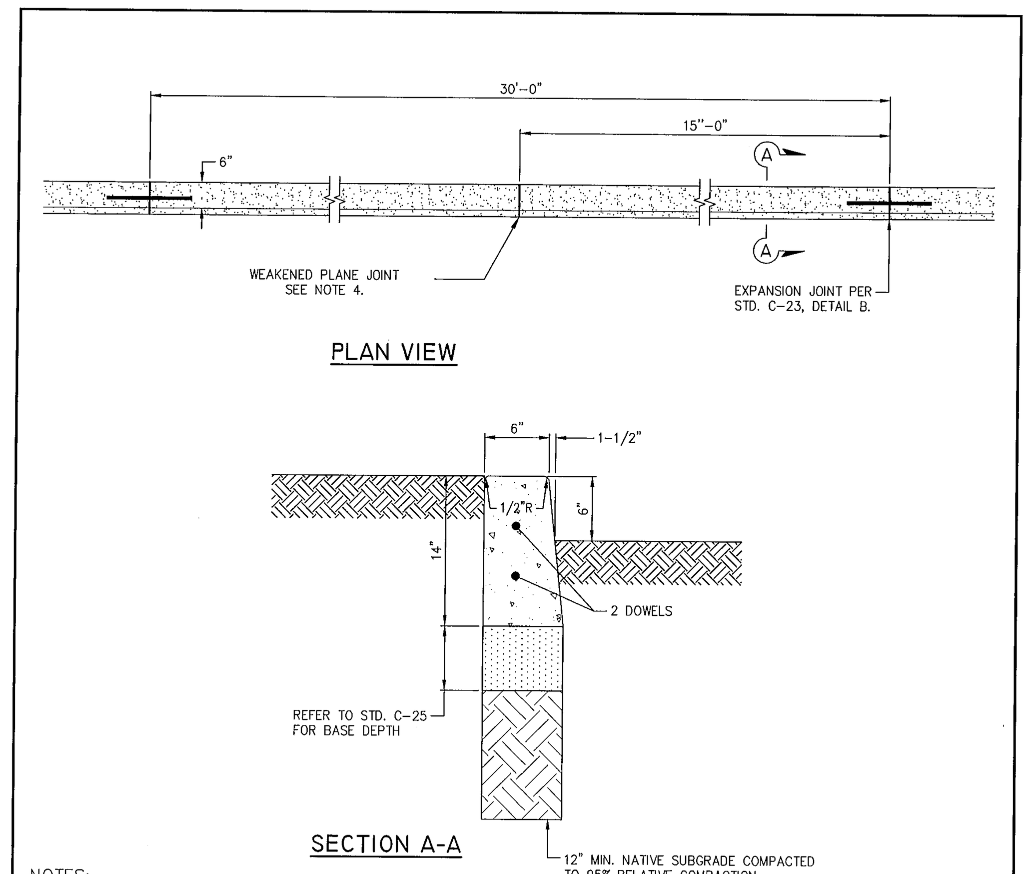

NOTES:

1. CONCRETE WORK SHALL BE 2500 P.S.I. DESIGN (5 SACK MIX). 4" MAX. SLUMP.
2. ALL CONCRETE SHALL HAVE A LIGHT BROOM FINISH, EXCEPT AS NOTED.
3. ALL FORM BOARDS SHALL BE FULL DEPTH AS SHOWN.
4. EXPANSION JOINTS AT CURB RETURN ENDS AND CURVE AT WALK RETURNS.
5. WEAKENED PLANE JOINTS AT DRIVEWAY APPROACHES, AND AT 15' SPACING, PER STANDARD SPECIFICATIONS. (SEE STD. DWG. C–23, DETAIL D). WEAKENED PLANE JOINTS SHALL BE A MIN. DEPTH OF 1–1/2" AND SHALL BE FINISHED WITH A SCORING TOOL LEAVING THE EDGES ROUNDED.
6. FINISHED SURFACES SHALL BE TREATED WITH CLEAR CURING COMPOUND COMPLYING WITH SECTION 201–4 OF THE STANDARD SPECIFICATIONS.
7. EXTRUDED CURB SHALL BE APPROVED BY THE CITY ENGINEER PRIOR TO PLACEMENT. CONCRETE USED FOR EXTRUDED CURB AND GUTTER SHALL HAVE A MAX. SLUMP OF 1–1/2".
8. ALL EXPOSED SURFACES OF CURB AND GUTTER SHALL NOT VARY IN EXCESS OF .02' WHEN AN 8' STRAIGHT EDGE IS PLACED ON THE SURFACE, EXCEPT AT GRADE CHANGES OR CURVES.
9. REPAIRS SHALL BE MADE BY REMOVING & REPLACING THE ENTIRE UNIT BETWEEN JOINTS.

APPROVED BY: ENGINEERING & PROJECT MANAGEMENT DIRECTOR — 5/19/2020 — DATE

BARRIER TYPE CURB — C–3

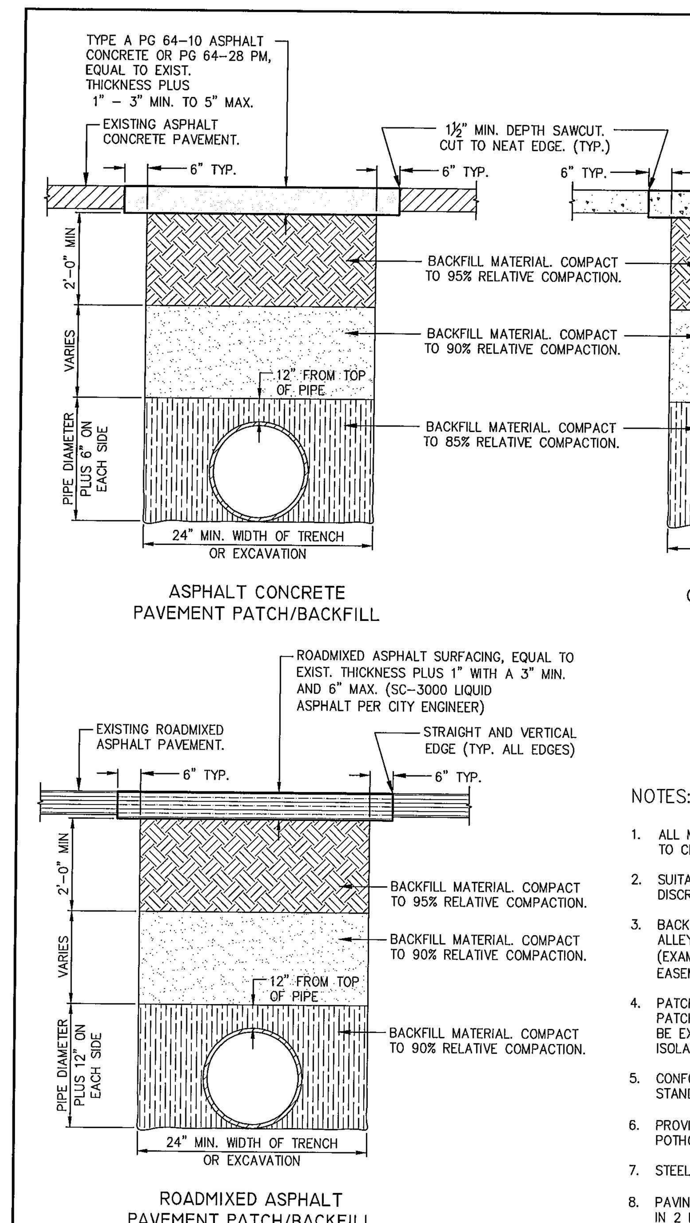

NOTES:

1. ALL MATERIALS AND WORKMANSHIP SHALL CONFORM TO CITY STANDARD SPECIFICATIONS.
2. SUITABILITY OF BACKFILL MATERIAL SHALL BE AT THE DISCRETION OF THE CITY ENGINEER.
3. BACKFILL COMPACTION OUTSIDE OF ROADWAY OR ALLEYWAY STRUCTURAL SECTION SHALL BE 90%. (EXAMPLE: BEHIND BACK OF CURB OR WITHIN EASEMENTS)
4. PATCHES LESS THAN TWO FEET FROM EXISTING PATCHES, EDGES OF PAVEMENT OR GUTTERS SHALL BE EXTENDED TO INCLUDE THE INTERMEDIATE ISOLATING STRIP OF EXISTING PAVEMENT.
5. CONFORM TO SEC. 26 & 39 OF THE CALTRANS STANDARD SPECIFICATIONS FOR MATERIALS SUPPLIED.
6. PROVIDE MINIMUM OF 18"x18" REPAIR HOLE FOR ALL POTHOLES.
7. STEEL DRUM ROLLER SHALL BE USED FOR TOP LIFT.
8. PAVING MORE THAN 3" THICK SHALL BE PREFORMED IN 2 LIFTS.

APPROVED BY: ENGINEERING & PROJECT MANAGEMENT DIRECTOR — 5/19/2020 — DATE

PAVEMENT PATCHES AND BACKFILL COMPACTION — P–10

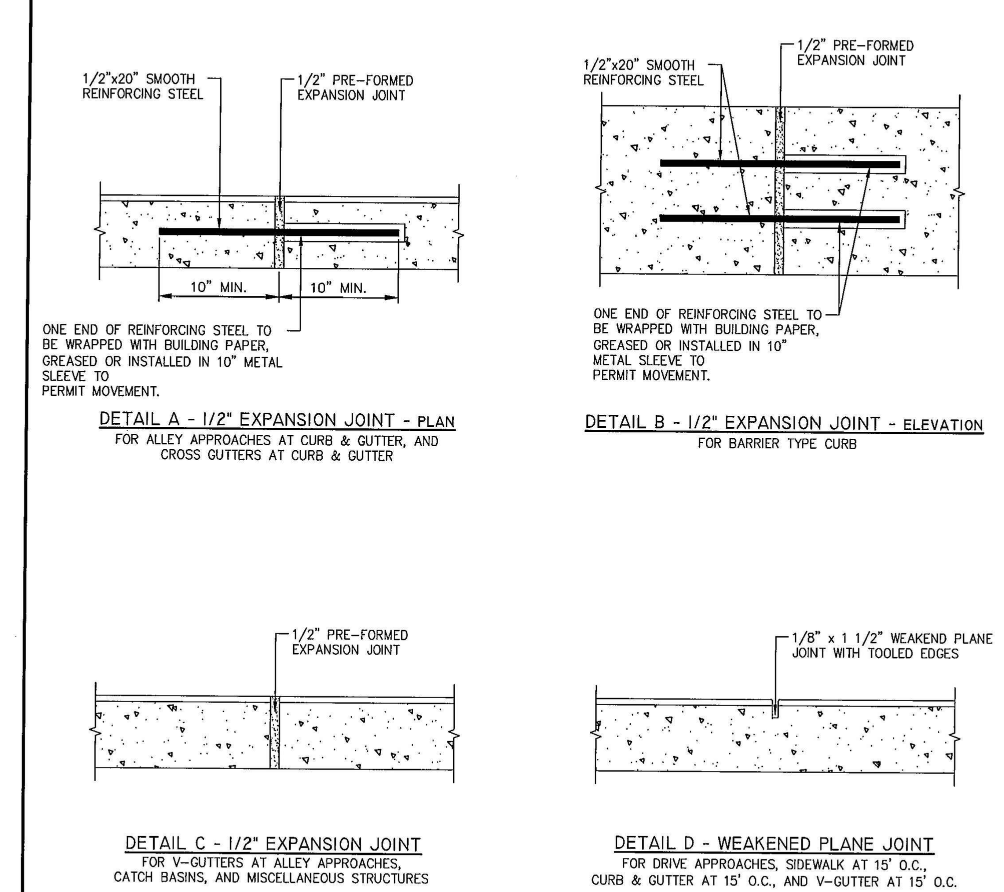

NOTES:

1. 1/2" EXPANSION JOINT AT CONNECTION TO ALLEY APPROACH, CATCHBASINS AND MISC. STRUCTURES.
2. 1/2" EXPANSION JOINT AT EACH SIDE OF EVERY STRUCTURE
3. WEAKENED PLANE JOINTS SHALL BE CONSTRUCTED AT 15' CENTERS AND SHALL BE A MIN. DEPTH OF 1 1/2" AND SHALL BE FINISHED WITH A SCORING TOOL LEAVING THE EDGES ROUNDED.

APPROVED BY: ENGINEERING & PROJECT MANAGEMENT DIRECTOR — 5/19/2020 — DATE

EXPANSION JOINT DETAILS — C–23

FOURTH ST COMMUNITY CENTER AND PARK

HENDERSON AVE., PORTERVILLE, CA 93257

CITY STANDARD DETAILS

NO.	REVISION	DATE
1	PLAN CHEK REVISION 1	5/17/24

PROJECT MANAGER: LANCE WIERSCHEM
DRAWN BY: W.V. — CHECKED BY: A.P.O.
DATE: 2024.01.15
PROJECT NUMBER: 2883-01-RC22
SHEET: CC505

PLAN CHECK REVISION 1

CITY STANDARD DETAILS

J:\Jobs\2022\22306\Dwg\Production Drawings\C7_Details.dwg, CC505, Aug 30, 2024 1:12pm, wa

J:\Jobs\2022\22306\Dwg\Production Drawings\C7_Details.dwg, CC505, Aug 30, 2024 1:12pm, wa

LANE PROJECT NO. 22306

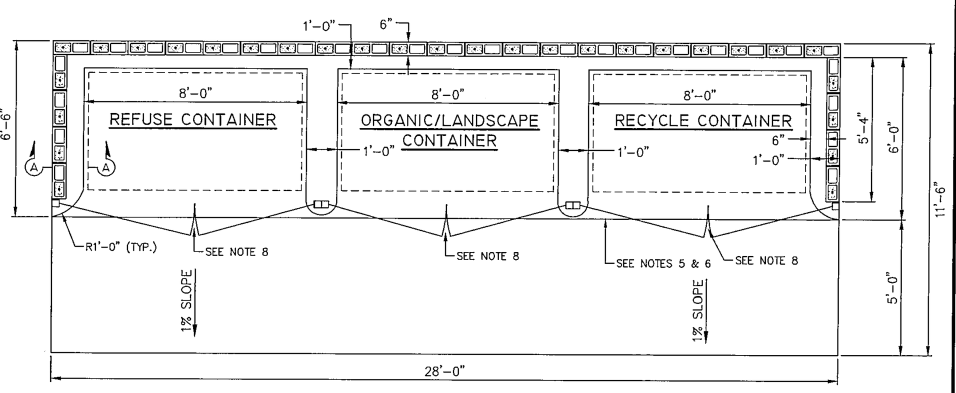

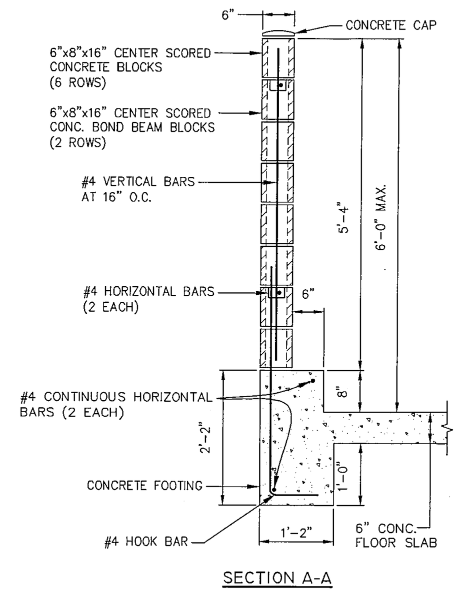

SECTION A-A

NOTES:

1. ALL CELLS IN CONCRETE BLOCKS WITH STEEL SHALL BE FILLED SOLID WITH COARSE GROUT.
2. CORNER BLOCK ENDS AND CENTER WEB SHALL BE CUT TO FORM CONTINUOUS BOND SEAM.
3. ALL HORIZONTAL AND VERTICAL JOINTS SHALL BE RAKED TO MATCH CENTER SCORED BLOCK.
4. CONCRETE BLOCK, MORTAR AND COARSE GROUT SHALL CONFORM WITH THE CURRENT EDITION OF THE CALIFORNIA BUILDING CODE.
5. 6" CONC. SLAB FLOOR AND FOOTING SHALL BE 2500 PSI (5 SACK MIX) PORTLAND CONCRETE CEMENT.
6. 6" CONC. SLAB TO BE FLUSH WITH A.C. PAVEMENT.
7. GROUND SHALL BE SLOPED AWAY FROM ENCLOSURE WALLS.
8. TRASH ENCLOSURE GATES SHALL HAVE ACCESSIBLE DOOR OPERATING HARDWARE. DESIGN AND MATERIALS PER APPROVAL OF CITY ENGINEER. SEE ARCH. SHEET AS102 & A911 FOR MORE INFORMATION.
9. ACCESSIBLE PATH OF TRAVEL REQUIRED FROM BUILDING TO ENCLOSURE. PATH OF TRAVEL SHALL BE STRIPED WHERE IT CROSSES VEHICULAR TRAVEL WAY. 5'-0" CONCRETE PAD IN FRONT OF ENCLOSURE MUST BE SEPARATE FROM VEHICULAR TRAVEL WAY.

CITY OF PORTERVILLE CALIFORNIA	APPROVED BY: PUBLIC WORKS DIRECTOR / DATE	THREE BIN – REFUSE AND RECYCLING ENCLOSURE	R–2

SIDEWALKS AND RAMPS:
1. ALL SIDEWALKS AND RAMPS SHALL BE CLASS III CONCRETE.
2. SIDEWALKS AND RAMPS SHALL BE PLACED ON MOIST AND COMPACTED BASE MATERIAL PER DETAIL C–25.
3. SIDEWALKS AND RAMPS SHALL BE STEEL TROWELED AND HAVE A LIGHT BROOM FINISH UNLESS OTHERWISE NOTED. RAMPS SHALL HAVE A HEAVY BROOM FINISH ACROSS THE SLOPE OF THE RAMP.
4. SIDEWALKS AND RAMPS SHALL HAVE WEAKENED PLAN JOINTS CONSTRUCTED AT 15 FOOT CENTERS AND WHERE SHOWN IN THE CITY STANDARDS. WEAKENED PLAN JOINTS SHALL BE A MINIMUM OF 1" IN DEPTH AND SHALL BE FINISHED WITH A SCORING TOOL LEAVING THE EDGES ROUNDED.
5. ESTABLISHED SIDEWALK PATTERN IN BLOCK SHALL BE MATCHED.
6. SPECIAL SIDEWALK DESIGNS AND MATERIALS SHALL BE SUBJECTED TO APPROVAL BY THE CITY ENGINEER.
7. SIDEWALK INSTALLED IN INFILL OR EXISTING AREAS SHALL BE SUBJECT TO THE APPROVAL OF THE CITY ENGINEER.
8. ALL SIDEWALKS AND RAMPS SHALL BE CURED IN ACCORDANCE WITH THE PROVISIONS IN THE GENERAL CONCRETE NOTES OF THESE IMPROVEMENT STANDARDS.
9. DETECTABLE WARNING SURFACE SHALL BE INSTALLED PER THESE IMPROVEMENT STANDARDS AND AS REQUIRED BY THE CITY ENGINEER.

DRIVE APPROACHES:
1. ALL DRIVE APPROACHES SHALL BE CLASS III CONCRETE UNLESS NOTED OTHERWISE.
2. SINGLE FAMILY RESIDENTIAL DRIVE APPROACHES SHALL BE PLACED ON MOIST AND COMPACTED BASE MATERIAL PER DETAIL C–25.
3. MULTI–FAMILY RESIDENTIAL, OFFICE AND COMMERCIAL DRIVE APPROACHES SHALL BE PLACED ON MOIST AND COMPACTED BASE MATERIAL PER DETAIL C–25.
4. MAJOR COMMERCIAL DRIVE APPROACHES SHALL BE PLACED ON MOIST AND COMPACTED BASE MATERIAL PER DETAIL C–25.
5. DRIVE APPROACHES SHALL BE STEEL TROWELED AND HAVE LIGHT BROOM FINISH.
6. DRIVE APPROACHES SHALL HAVE A WEAKENED PLAN JOINT CONSTRUCTED AT EACH EDGE AND AT THE CENTERLINE. WEAKENED PLAN JOINTS SHALL BE A MINIMUM OF 1–1/2 INCH IN DEPTH AND SHALL BE FINISHED WITH A SCORING TOOL LEAVING THE EDGES ROUNDED.
7. NO MORE THAN 50 PERCENT OF PROPERTY FRONTAGE SHALL BE USED AS A DRIVE APPROACH.
8. DRIVE APPROACHES ON STATE ROUTES ARE SUBJECT TO APPROVAL BY CALTRANS.
9. ALL EXPOSED SURFACES OF THE DRIVE APPROACH AND FLOW LINES SHALL NOT VARY IN EXCESS OF 0.02 FEET WHEN A 10 FOOT STRAIGHT EDGE IS PLACED ON THE SURFACE, EXCEPT AT GRADE CHANGES OR CURVES.
10. ALL DRIVE APPROACHES SHALL BE CURED IN ACCORDANCE WITH THE PROVISIONS IN THE GENERAL CONCRETE NOTES OF THESE IMPROVEMENTS.

CITY OF PORTERVILLE CALIFORNIA	APPROVED BY: Javier Sanchez Jr. 5/19/2020 ENGINEERING & PROJECT MANAGEMENT DIRECTOR / DATE	CONCRETE SPECIFICATIONS	C–27

GENERAL CONCRETE NOTES:
1. ALL CONCRETE SHALL BE CLASS III CONCRETE UNLESS NOTED OTHERWISE.
2. CLASS II CONCRETE SHALL CONTAIN NO LESS THAN 590 POUNDS OF PORTLAND CEMENT PER CUBIC YARD WITH 1" AGGREGATE. 4" SLUMP ±1". 3000 PSI MINIMUM COMPRESSIVE STRENGTH AT 28 DAYS
3. CLASS III CONCRETE SHALL CONTAIN NO LESS THAN 505 POUNDS OF PORTLAND CEMENT PER CUBIC YARD WITH 1" AGGREGATE. 4" SLUMP ±1". 2500 PSI MINIMUM COMPRESSIVE STRENGTH AT 28 DAYS.
4. CLASS IIII CONCRETE SHALL CONTAIN NO LESS THAN 420 POUNDS OF PORTLAND CEMENT PER CUBIC YARD WITH 1" AGGREGATE. 4" SLUMP ±1". 2500 PSI MINIMUM COMPRESSIVE STRENGTH AT 28 DAYS.
5. WHEN MAXIMUM AMBIENT TEMPERATURE EXCEEDS 50°F. ALL NEW CONCRETE PLACED SHALL BE SPRAYED UNIFORMLY WITH A CURING COMPOUND. CURING COMPOUND SHALL BE APPLIED AT A NOMINAL RATE OF ONE GALLON PER 150 SQUARE FEET, UNLESS OTHERWISE SPECIFIED.
6. ALL WORK CONSTRUCTED BY THESE STANDARDS SHALL BE IN COMPLIANCE WITH ALL CURRENT ADA REGULATIONS.
7. WHERE REBAR IS USED, CONTRACTOR SHALL INSTALL WIRE TIES SECURELY AT ALL REBAR CROSSINGS. CONCRETE BLOCK OR CHAIRS AS APPROVED BY THE CITY ENGINEER SHALL BE INSTALLED PRIOR TO CONCRETE INSTALLATION TO KEEP REBAR IN THE PROPER LOCATION.

CONCRETE CURB AND GUTTER:
1. ALL CURB AND GUTTER, VEE GUTTER, MEDIAN CURB AND LANDSCAPE CURB SHALL BE CLASS III CONCRETE.
2. BARRIER TYPE CURB AND GUTTER SHALL HAVE A MINIMUM GRADIENT OF 0.2 FEET PER 100 FEET OR AS APPROVED BY THE CITY ENGINEER.
3. BARRIER TYPE CURB AND GUTTER ON THE CURVE OF A CUL–DE–SACS AND STREET BULBS SHALL HAVE A MINIMUM GRADIENT OF 0.25 FEET PER 100 FEET OR AS APPROVED BY THE CITY ENGINEER.
4. ROLL TYPE CURB AND GUTTER SHALL HAVE A MINIMUM GRADIENT OF 0.25 FEET PER 100 FEET OR AS APPROVED BY THE CITY ENGINEER.
5. VEE GUTTER SHALL HAVE A MINIMUM GRADIENT OF 0.25 FEET PER 100 FEET OR AS APPROVED BY THE CITY ENGINEER.
6. ALL CURB AND GUTTER, VEE GUTTER, MEDIAN CURB AND LANDSCAPING CURB SHALL BE PLACED ON 6 INCH MOIST AND COMPACT BASE MATERIAL.
7. ALL CURB AND GUTTER, VEE GUTTER, MEDIAN CURB AND LANDSCAPE CURB SHALL HAVE A LIGHT BROOM FINISH.
8. ALL CURB AND GUTTER AND VEE GUTTER SHALL HAVE A WEAKENED PLAN JOINTS CONSTRUCTED AT 15 FOOT CENTERS. MEDIAN CURB AND LANDSCAPING CURB SHALL HAVE A WEAKENED PLAN JOINTS CONSTRUCTED AT 8 FOOT CENTERS. WEAKENED PLANE JOINTS SHALL BE A MINIMUM OF 1–1/2 INCHES IN DEPTH AND SHALL BE FINISHED WITH A SCORING TOOL LEAVING THE EDGES ROUND.
9. ALL EXPOSED SURFACED OF CURB AND GUTTER, VEE GUTTER, MEDIAN CURB AND LANDSCAPING CURB SHALL NOT VARY IN EXCESS OF 0.02 FEET WHEN A 10 FOOT STRAIGHT EDGE IS PLACED ON THE SURFACE, EXCEPT AT GRADE CHANGES OR CURVES.
10. ALL CURB, GUTTER AND VEE GUTTER SHALL BE WATER TESTED FOR FLOW.
11. ALL CURB AND GUTTER, VEE GUTTER, MEDIAN CURB AND LANDSCAPING CURB SHALL BE CURED IN ACCORDANCE WITH THE PROVISIONS IN THE GENERAL CONCRETE NOTES IN THESE IMPROVEMENT STANDARDS.

CITY OF PORTERVILLE CALIFORNIA	APPROVED BY: Javier Sanchez Jr. 5/19/2020 ENGINEERING & PROJECT MANAGEMENT DIRECTOR / DATE	CONCRETE SPECIFICATIONS	C–26

BASE MATERIAL REQUIRED IN REFERENCE TO THE EXPANSION INDEX:

EXPANSION INDEX LESS THAN 21
1. VERY LOW EXPANSION POTENTIAL SOILS, NON–EXPANSIVE BASE MATERIAL IS NOT REQUIRED.

EXPANSION INDEX 21 TO 50
2. LOW EXPANSION POTENTIAL SOILS, PLACE A MIN. OF 4" OF NON–EXPANSIVE BASE MATERIAL BENEATH CONCRETE STRUCTURES. SATURATE THE BASE MATERIAL AND SUBGRADE WITH WATER 24 HOURS PRIOR TO POURING CONCRETE.

EXPANSION INDEX 51 TO 90
3. MEDIUM EXPANSION POTENTIAL SOILS, PLACE A MINIMUM OF 8" OF NON–EXPANSIVE BASE MATERIAL BENEATH CONCRETE STRUCTURES. SATURATE THE BASE MATERIAL AND SUBGRADE BY PONDING WATER ON IT FOR 24 HOURS PRIOR TO POURING CONCRETE.

EXPANSION INDEX GREATER THAN 90
4. VERY HIGH EXPANSION POTENTIAL SOILS, PLACE A MINIMUM OF 16" OF NON–EXPANSIVE BASE MATERIAL BENEATH CONCRETE STRUCTURES. SATURATE THE BASE MATERIAL AND SUBGRADE WITH WATER 24 HOURS PRIOR TO POURING CONCRETE. PLACE TWO NUMBER FOUR REINFORCING BARS IN THE CURB, CONTINUOUSLY. A PRELIMINARY SOILS REPORT CONTAINING RECOMMENDATIONS FOR MITIGATION CONCERNING SIDEWALK, CURB AND GUTTER CONSTRUCTION IS REQUIRED, IN ORDER TO GAIN APPROVAL OF AN ALTERNATIVE TO THE USE OF 16" OF NON–EXPANSIVE MATERIAL.

NOTE:
IN ANY SUBDIVISION WHERE ANY INDIVIDUAL SOIL SAMPLE HAS AN EXPANSION INDEX GREATER THAN 50, THE CITY ENGINEER MAY REQUIRE ADDITIONAL SOIL SAMPLES AND TESTS, UP TO ONE SET PER THREE ACRES, FOR THE PURPOSE OF DETERMINING THE EXPANSIVE INDEX(ES) FOR THE PROPOSED DEVELOPMENT.

SHRINK/SWELL POTENTIALS:

BASE MATERIAL REQUIRED IN REFERENCE TO THE SOIL CONSERVATION SERVICE CRITERIA
1. AREAS WITH LOW SHRINK/SWELL POTENTIAL. NON–EXPANSIVE MATERIAL IS NOT REQUIRED. NO SOILS REPORT IS REQUIRED FOR BUILDING PERMITS.
2. AREAS CONTAINING SOIL THAT HAS A LOW TO MODERATE SHRINK/SWELL POTENTIAL, REQUIRES A MINIMUM OF 4 INCHES OF NON–EXPANSIVE MATERIAL BENEATH CONCRETE STRUCTURES. SATURATE THE BASE MATERIAL AND SUBGRADE WITH WATER 24 HOURS PRIOR TO POURING CONCRETE. A SOILS REPORT IS REQUIRED FOR ALL BUILDING PERMITS EXCEPT SINGLE FAMILY RESIDENTIAL.
3. AREAS CONTAINING SOIL THAT HAS A MODERATE SHRINK/SWELL POTENTIAL, REQUIRES A MINIMUM OF 8 INCHES OF NON–EXPANSIVE MATERIAL BENEATH CONCRETE STRUCTURES. SATURATE THE BASE MATERIAL AND SUBGRADE WITH WATER 24 HOURS PRIOR TO POURING CONCRETE. A SOILS REPORT IS REQUIRED FOR ALL BUILDING PERMITS.
4. AREAS CONTAINING SOIL THAT HAS A HIGH SHRINK/SWELL POTENTIAL, REQUIRES 16 INCHES OF NON–EXPANSIVE MATERIAL BENEATH CONCRETE STRUCTURES. SATURATE THE BASE MATERIAL AND SUBGRADE WITH WATER 24 HOURS PRIOR TO POURING CONCRETE. PLACE TWO NUMBER FOUR REINFORCING BARS IN CURB, CONTINUOUSLY. A SOILS REPORT IS REQUIRED FOR ALL BUILDING PERMITS.

NOTE:
SEE APPENDIX A FOR SOIL CONSERVATION SERVICE SOILS LEGEND WITH SHRINK/SWELL POTENTIALS AND APPENDIX B FOR SOIL CONSERVATION SERVICE SOILS MAP FOR PORTERVILLE AREA (SEE POCKET AT THE BACK OF THESE STANDARDS).

BASE MATERIAL WILL BE AS SHOWN ABOVE OR AS DETERMINED BY THE CITY ENGINEER.

CITY OF PORTERVILLE CALIFORNIA	APPROVED BY: Javier Sanchez Jr. 5/19/2020 ENGINEERING & PROJECT MANAGEMENT DIRECTOR / DATE	SPECIFICATIONS FOR CONSTRUCTION OF CONCRETE IMPROVEMENTS ON EXPANSIVE SOILS	C–25

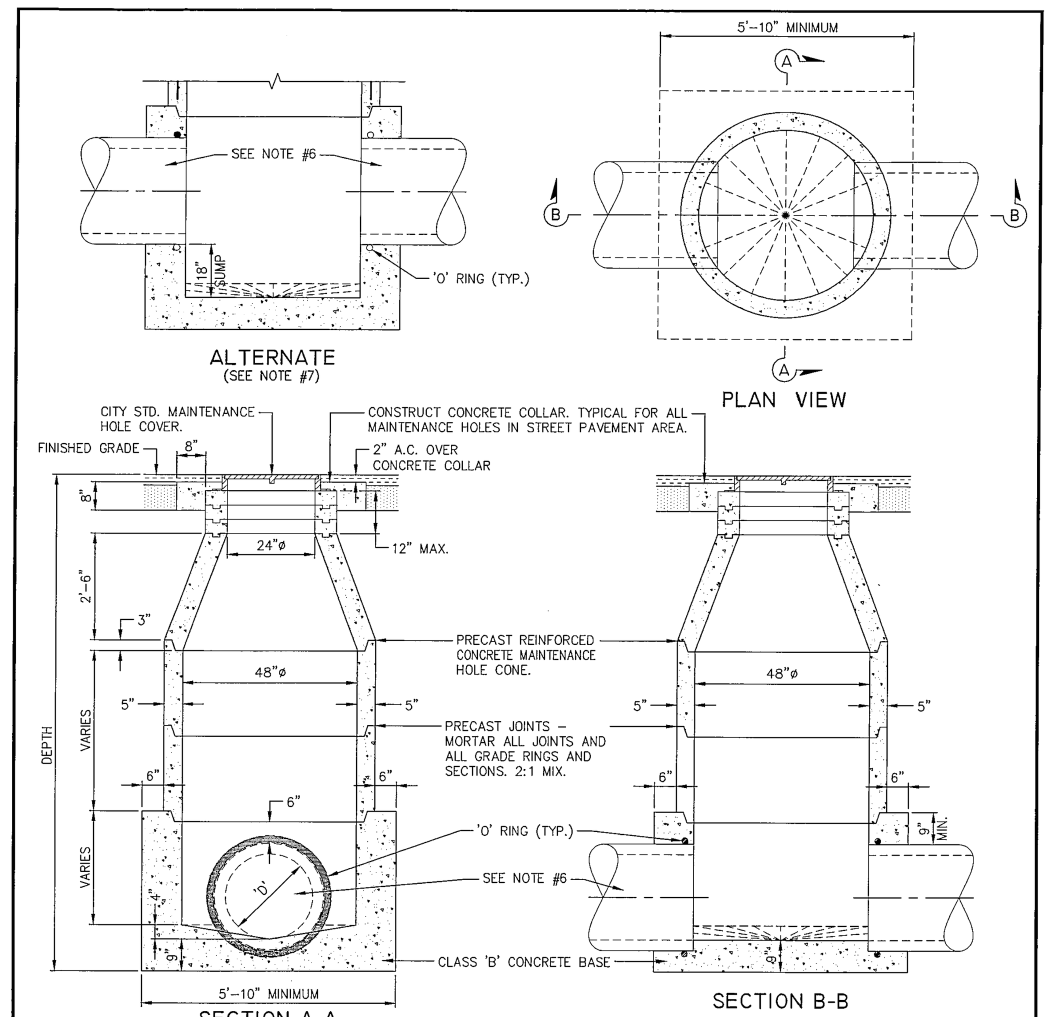

NOTES:

1. ALL CONCRETE SHALL BE CLASS B CONCRETE.
2. MANHOLE PIPE, CONE AND GRADE RINGS SHALL BE PRECAST REINFORCED CONCRETE AS PER ASTM C–478.
3. MORTAR AND BAND ALL PIPE JOINTS. MORTAR MIXTURE SHALL BE ONE PART CEMENT PER TWO PARTS SAND.
4. MASTIC (KENT SEAL NO. 2 OR EQUAL) MAY BE SUBSTITUTED AT JOINTS. MASTIC SHALL COVER A MINIMUM OF ONE–HALF THE COMPRESSED SURFACE. INSIDE OF MANHOLE JOINT SHALL BE MORTARED TO A SMOOTH SURFACE.
5. MAXIMUM DISTANCE BETWEEN MANHOLES SHALL BE 500 FEET OR AS REQUIRED BY THE CITY ENGINEER.
6. 48" MANHOLES ARE REQUIRED FOR STORM DRAIN PIPE SIZES FROM 12" TO 24" OR AS REQUIRED BY THE CITY ENGINEER.
7. SUMP BOTTOM MANHOLES ARE REQUIRED ON ALL STORM DRAIN SYSTEMS WITH PUMPS.

CITY OF PORTERVILLE CALIFORNIA	APPROVED BY: Date PUBLIC WORKS DIRECTOR R.C.E. / DATE	48" MAINTENANCE HOLE	D–1

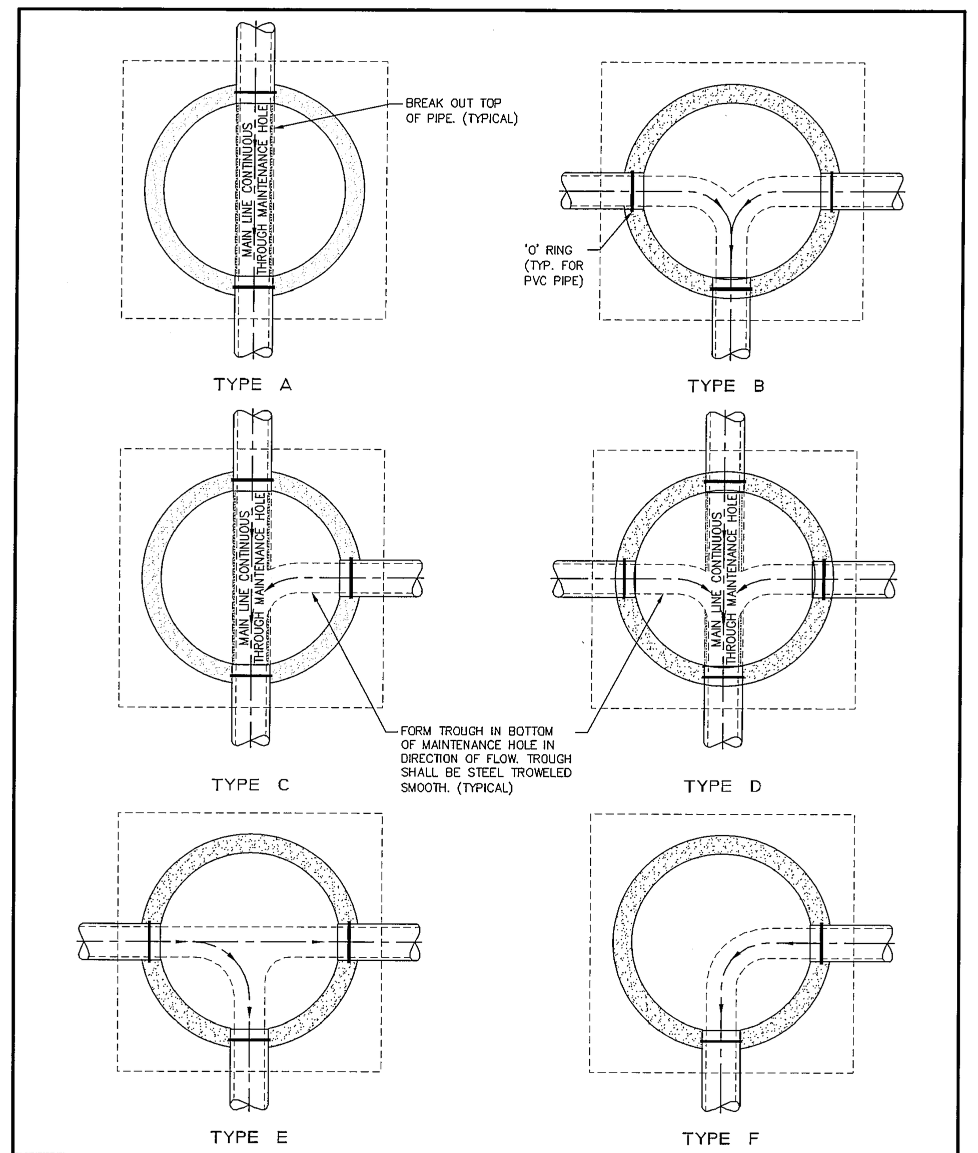

CITY OF PORTERVILLE CALIFORNIA	APPROVED BY: Baldomero Rodriguez Date PUBLIC WORKS DIRECTOR R.C.E. 45304 / DATE	TYPICAL FLOW CHANNELS FOR STANDARD MAINTENANCE HOLES	S–6

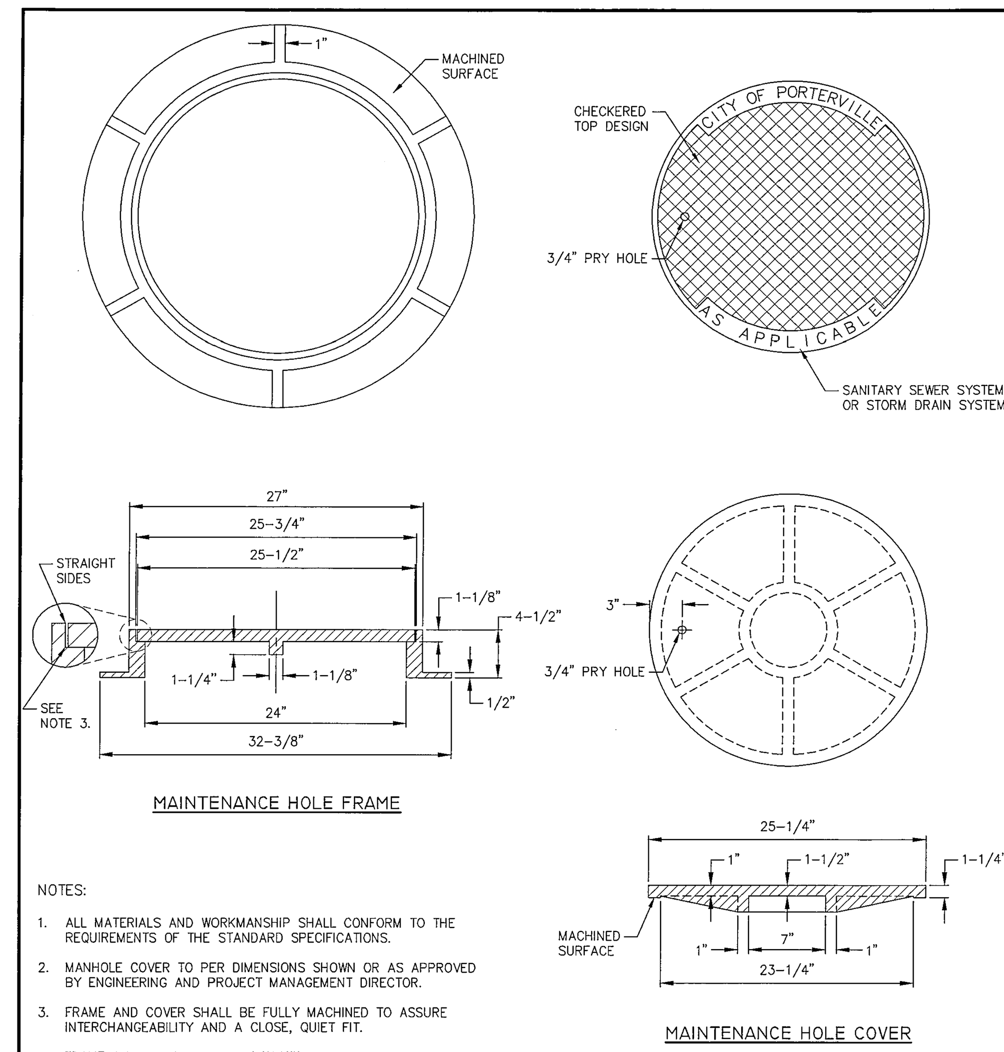

NOTES:

1. ALL MATERIALS AND WORKMANSHIP SHALL CONFORM TO THE REQUIREMENTS OF THE STANDARD SPECIFICATIONS.
2. MANHOLE COVER TO PER DIMENSIONS SHOWN OR AS APPROVED BY ENGINEERING AND PROJECT MANAGEMENT DIRECTOR.
3. FRAME AND COVER SHALL BE FULLY MACHINED TO ASSURE INTERCHANGEABILITY AND A CLOSE, QUIET FIT.
4. FRAME AND COVER SHALL BE TRAFFIC RATED.

CITY OF PORTERVILLE CALIFORNIA	APPROVED BY: Javier Sanchez Jr. 6/10/2020 ENGINEERING & PROJECT MANAGEMENT DIRECTOR / DATE	MAINTENANCE HOLE FRAME & COVER	S–4

NOTES:

1. ALL MATERIALS AND WORKMANSHIP SHALL CONFORM TO THE REQUIREMENTS OF THE STANDARD SPECIFICATIONS.
2. PRECAST REINFORCED CONCRETE MAINTENANCE HOLE SHALL BE CONSTRUCTED IN ACCORDANCE WITH PROVISIONS OF ASTM DESIGNATION C–478.
3. ALL CONCRETE SHALL BE 2500# (5 SACK MIX).
4. GROUT AND BOND ALL PIPE JOINTS. GROUT MIXTURE ONE PART CEMENT PER TWO PARTS SAND. CONE AND GRADE RINGS SHALL BE PRECAST REINFORCED CONCRETE AS PER ASTM C–478. KENT SEAL CAN BE USED IN LIEU OF GROUT AT PIPE JOINTS AND NOTE 5 IS REQUIRED.
5. INTERIOR OF SANITARY SEWER MAINTENANCE HOLE SHALL HAVE A SMOOTH FINISH.
6. ALL FLOWLINES SHALL BE MAINTAINED THROUGHOUT, EITHER BY EMBEDDING PIPE IN CONCRETE BASE AND CUTTING OUT THE TOP HALF, OR BY CREATING A SMOOTH TROUGH WHICH IS NO WIDER THAN THE CONNECTING PIPE.

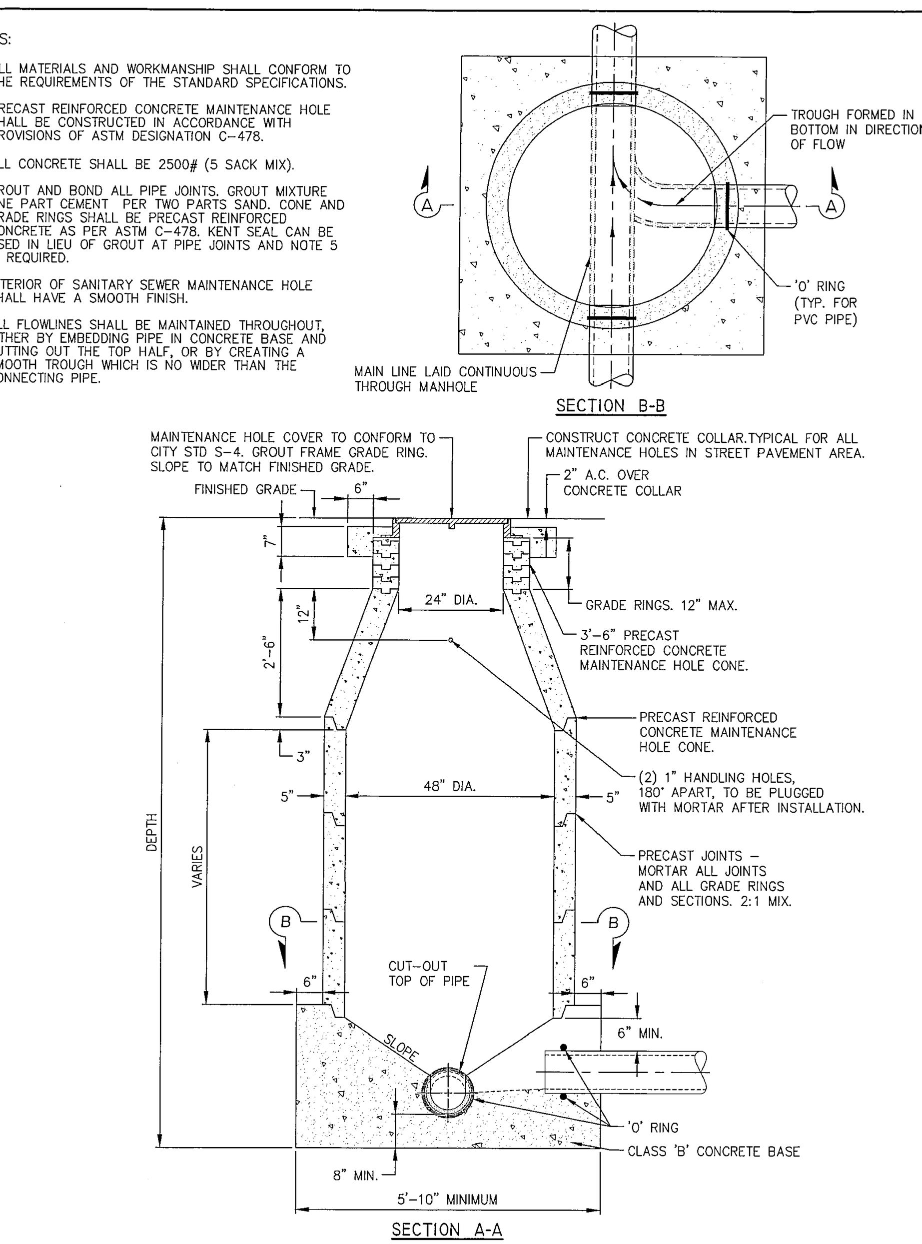

CITY OF PORTERVILLE CALIFORNIA	APPROVED BY: Date E.P.M.D. DIRECTOR RCE / DATE	48" SANITARY SEWER MAINTENANCE HOLE	S–1

CITY STANDARD DETAILS

J: \Jobs\2022\22306\Dwg\Production Drawings\C7_Details.dwg, CC506, Aug 30, 2024 1:12pm, wa

rrm design group
rrmdesign.com | (805) 543-1794
3765 SOUTH HIGUERA STREET, SUITE 102
SAN LUIS OBISPO, CA 93401

THE INCLUDED DRAWINGS, SPECIFICATIONS, IDEAS, DESIGNS AND ARRANGEMENTS REPRESENTED THEREBY ARE AND SHALL REMAIN THE PROPERTY OF RRM DESIGN GROUP AND NO PART THEREOF SHALL BE COPIED, DISCLOSED TO OTHERS OR USED IN CONNECTION WITH ANY WORK OR PROJECT OTHER THAN THE SPECIFIED PROJECT FOR WHICH THEY HAVE BEEN PREPARED AND DEVELOPED WITHOUT THE WRITTEN CONSENT OF RRM DESIGN GROUP. VISUAL CONTACT WITH THESE DRAWINGS OR SPECIFICATIONS SHALL CONSTITUTE CONCLUSIVE EVIDENCE OF ACCEPTANCE OF THESE RESTRICTIONS. SUBMITTAL OF THESE DOCUMENTS FOR PUBLIC AGENCY REVIEW SHALL NOT BE CONSIDERED A WAIVER OF RRM DESIGN GROUP'S RIGHTS.
RRM DESIGN GROUP COPYRIGHT 2023.
RRM IS A CALIFORNIA CORPORATION

REGISTERED PROFESSIONAL ENGINEER WA VANG R.C.E. 86967 08/30/2024 CIVIL STATE OF CALIFORNIA

CONSULTANT

LANE ENGINEERS INC.
CIVIL • STRUCTURAL • SURVEYING
979 N. BLACKSTONE STREET
TULARE, CALIFORNIA 93274
(559) 688-5263
www.laneengineers.com

AGENCY

FOURTH ST COMMUNITY CENTER AND PARK
HENDERSON AVE., PORTERVILLE, CA 93257

CITY STANDARD DETAILS

NO.	REVISION	DATE
1	PLAN CHEK REVISION 1	5/17/24

PLAN CHECK REVISION 1

PROJECT MANAGER: LANCE WIERSCHEM
DRAWN BY: W.V.
CHECKED BY: A.P.O.
DATE: 2024.01.15
PROJECT NUMBER: 2883-01-RC22
SHEET: CC506

LANE PROJECT NO. 22306

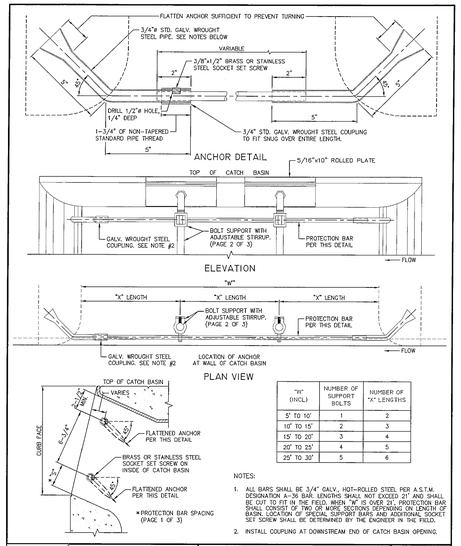

"W" (INCL)	NUMBER OF SUPPORT BOLTS	NUMBER OF "X" LENGTHS
5' TO 10'	1	2
10' TO 15'	2	3
15' TO 20'	3	4
20' TO 25'	4	5
25' TO 30'	5	6

NOTES:

1. ALL BARS SHALL BE 3/4" GALV., HOT-ROLLED STEEL PER A.S.T.M. DESIGNATION A-36 BAR. LENGTHS SHALL NOT EXCEED 21' AND SHALL BE CUT TO FIT IN THE FIELD. WHEN "W" IS OVER 25', PROTECTION BAR SHALL CONSIST OF TWO OR MORE SECTIONS DEPENDING ON LENGTH OF BASIN. LOCATION OF SPECIAL SUPPORT BARS AND ADDITIONAL SOCKET SET SCREW SHALL BE DETERMINED BY THE ENGINEER IN THE FIELD.
2. INSTALL COUPLING AT DOWNSTREAM END OF CATCH BASIN OPENING.

APPROVED BY: Bettencourt/Rodriguez — PUBLIC WORKS DIRECTOR R.C.E. 45304 — Date — DATE

CATCH BASIN OPENING DETAILS — D-10 3 of 3

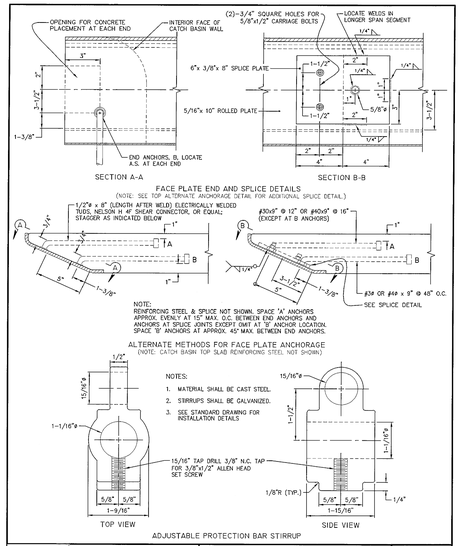

APPROVED BY: Bettencourt/Rodriguez — PUBLIC WORKS DIRECTOR R.C.E. 45304 — Date — DATE

CATCH BASIN OPENING DETAILS — D-10 2 of 3

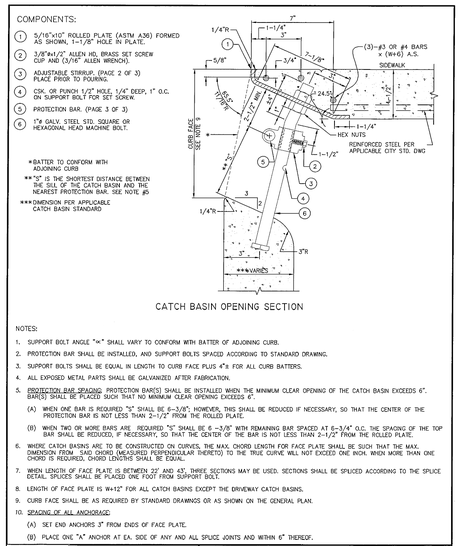

NOTES:

1. SUPPORT BOLT ANGLE "#" SHALL VARY TO CONFORM WITH BATTER OF ADJOINING CURB.
2. PROTECTION BAR SHALL BE INSTALLED, AND SUPPORT BOLTS SPACED ACCORDING TO STANDARD DRAWING.
3. SUPPORT BOLTS SHALL BE EQUAL IN LENGTH TO CURB FACE PLUS 4"± FOR ALL CURB BATTERS.
4. ALL EXPOSED METAL PARTS SHALL BE GALVANIZED AFTER FABRICATION.
5. PROTECTION BAR SPACING: PROTECTION BAR(S) SHALL BE INSTALLED WHEN THE MINIMUM CLEAR OPENING OF THE CATCH BASIN EXCEEDS 6". BAR(S) SHALL BE PLACED SUCH THAT NO MINIMUM CLEAR OPENING EXCEEDS 6".
   (A) WHEN ONE BAR IS REQUIRED "S" SHALL BE 6-3/8". HOWEVER, THIS SHALL BE REDUCED IF NECESSARY, SO THAT THE CENTER OF THE PROTECTION BAR IS NOT LESS THAN 2-1/2" FROM THE ROLLED PLATE.
   (B) WHEN TWO OR MORE BARS ARE REQUIRED "S" SHALL BE 6 -3/8" WITH REMAINING BAR SPACED AT 6-3/4" O.C. THE SPACING OF THE TOP BAR SHALL BE REDUCED, IF NECESSARY, SO THAT THE CENTER OF THE BAR IS NOT LESS THAN 2-1/2" FROM THE ROLLED PLATE.
6. WHERE CATCH BASINS ARE TO BE CONSTRUCTED ON CURVES, THE MAX. CHORD LENGTH FOR FACE PLATE SHALL BE SUCH THAT THE MAX. DIMENSION FROM "SAID CHORD (MEASURED PERPENDICULAR THERETO) TO THE TRUE CURVE WILL NOT EXCEED ONE INCH. WHEN MORE THAN ONE CHORD IS REQUIRED, CHORD LENGTHS SHALL BE EQUAL.
7. WHEN LENGTH OF FACE PLATE IS BETWEEN 22' AND 43', THREE SECTIONS MAY BE USED. SECTIONS SHALL BE SPLICED ACCORDING TO THE SPLICE DETAIL. SPLICES SHALL BE PLACED ONE FOOT FROM SUPPORT BOLT.
8. LENGTH OF FACE PLATE IS W+12" FOR ALL CATCH BASINS EXCEPT THE DRIVEWAY CATCH BASINS.
9. CURB FACE SHALL BE AS REQUIRED BY STANDARD DRAWINGS OR AS SHOWN ON THE GENERAL PLAN.
10. SPACING OF ALL ANCHORAGE:
   (A) SET END ANCHORS 3" FROM ENDS OF FACE PLATE.
   (B) PLACE ONE "A" ANCHOR AT EA. SIDE OF ANY AND ALL SPLICE JOINTS AND WITHIN 6" THEREOF.

APPROVED BY: Bettencourt/Rodriguez — PUBLIC WORKS DIRECTOR R.C.E. 45304 — Date — DATE

CATCH BASIN OPENING DETAILS — D-10 1 of 3

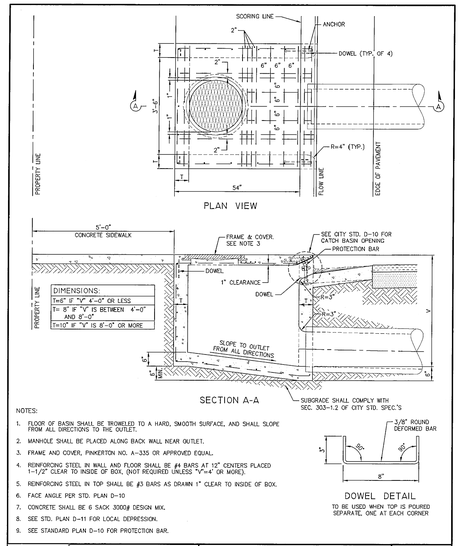

DIMENSIONS:
T=6" IF "V" 4'-0" OR LESS
T= 8" IF "V" IS BETWEEN 4'-0" AND 8'-0"
T=10" IF "V" IS 8'-0" OR MORE

NOTES:

1. FLOOR OF BASIN SHALL BE TROWELED TO A HARD, SMOOTH SURFACE, AND SHALL SLOPE FROM ALL DIRECTIONS TO THE OUTLET.
2. MANHOLE SHALL BE PLACED ALONG BACK WALL NEAR OUTLET.
3. FRAME AND COVER, PINKERTON NO. A-335 OR APPROVED EQUAL.
4. REINFORCING STEEL IN WALL AND FLOOR SHALL BE #4 BARS AT 12" CENTERS PLACED 1-1/2" CLEAR TO INSIDE OF BOX. (NOT REQUIRED UNLESS "V"=4' OR MORE).
5. REINFORCING STEEL IN TOP SHALL BE #3 BARS AS DRAWN 1" CLEAR TO INSIDE OF BOX.
6. FACE ANGLE PER STD. PLAN D-10
7. CONCRETE SHALL BE 6 SACK 3000# DESIGN MIX.
8. SEE STD. PLAN D-11 FOR LOCAL DEPRESSION.
9. SEE STANDARD PLAN D-10 FOR PROTECTION BAR.

APPROVED BY: Bettencourt/Rodriguez — PUBLIC WORKS DIRECTOR R.C.E. 45304 — Date — DATE

STORM CATCH BASIN TYPE I — D-5

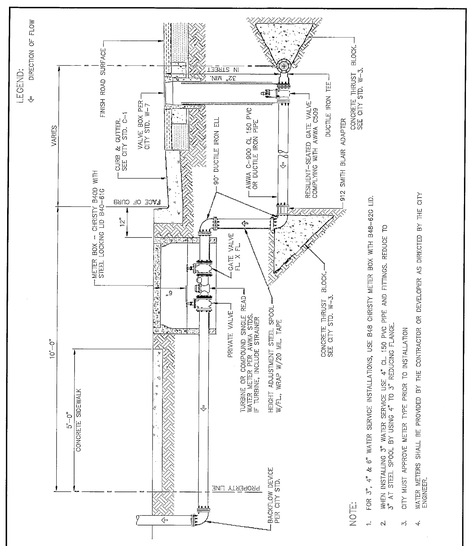

APPROVED BY: — PUBLIC WORKS DIRECTOR — Date — DATE

3", 4" & 6" WATER SERVICE — W-6

THRUST BLOCK BEARING AREA

PIPE SIZE	FITTING	TYPE OF SOIL: SOFT CLAY, SANDY CLAY, SILTY CLAY & CLAYEY SILT (1000 WP.S.F.) DIMENSION (FEET) MINIMUM BEARING AREA (SQFT.)	A	B	SANDY GRAVEL AND/OR GRAVEL (2000 WP.S.F.) DIMENSION (FEET) MINIMUM BEARING AREA (SQFT.)	A	B	SEDIMENTARY AND FOLIATED BEDROCK (3000 WP.S.F.) DIMENSION (FEET) MINIMUM BEARING AREA (SQFT.)	A	B
6"	PLUG, CAP	6	3'-0"	2'-0"	3	2'-0"	1'-6"	2	2'-0"	1'-0"
	90° ELL	7	3'-0"	2'-6"	4	2'-0"	2'-0"	3	2'-0"	1'-6"
	45° BEND	4	2'-0"	2'-0"	2.25	1'-6"	1'-6"	1.5	1'-6"	1'-0"
	22-1/2° BEND	2.25	1'-6"	1'-6"	1	1'-0"	1'-0"	1	1'-0"	1'-0"
	TEE W/6" OUTLET	6	3'-0"	2'-0"	3	2'-0"	1'-6"	2	2'-0"	1'-0"
8"	PLUG, CAP	10	4'-0"	2'-6"	5	2'-6"	2'-0"	3.25	2'-0"	1'-6"
	90° ELL	14	4'-0"	3'-6"	7	3'-0"	2'-6"	5	2'-6"	2'-0"
	45° BEND	7.5	3'-0"	2'-6"	4	2'-0"	2'-0"	2.5	1'-8"	1'-6"
	22-1/2° BEND	4	2'-0"	2'-0"	2	2'-0"	1'-0"	1.5	1'-6"	1'-0"
	TEE W/8" OUTLET	10	4'-0"	2'-6"	5	2'-6"	2'-0"	3.25	2'-2"	1'-6"
10"	PLUG, CAP	14	4'-0"	3'-6"	7	3'-0"	2'-6"	4	2'-0"	2'-0"
	90° ELL	20	5'-0"	4'-0"	10	3'-6"	3'-4"	5	2'-6"	2'-0"
	45° BEND	10.5	3'-6"	3'-0"	5	2'-6"	2'-0"	3.25	2'-2"	1'-6"
	22-1/2° BEND	6	3'-0"	2'-0"	3	2'-0"	1'-6"	2	2'-0"	1'-0"
	TEE W/10" OUTLET	14	4'-0"	3'-6"	7	3'-0"	2'-6"	4	2'-6"	2'-0"
12"	PLUG, CAP	24	6'-0"	4'-0"	12	4'-0"	3'-0"	7.5	3'-0"	2'-6"
	90° ELL	32.5	6'-6"	5'-0"	16	4'-0"	4'-0"	10.5	3'-6"	3'-0"
	45° BEND	17.5	5'-0"	3'-6"	8.75	3'-6"	2'-6"	6	3'-0"	2'-0"
	22-1/2° BEND	8.75	3'-6"	2'-6"	4.5	2'-3"	2'-0"	3	2'-0"	1'-6"
	TEE W/6" OUTLET	24	6'-0"	4'-0"	24	4'-0"	3'-0"	7.5	3'-0"	2'-6"
	PLUG, CAP	40	7'-6"	5'-6"	20	5'-0"	4'-0"	13.5	4'-6"	3'-0"
16"	90° ELL	56	8'-0"	7'-0"	28	7'-0"	4'-0"	20	5'-0"	4'-0"
	45° BEND	30	6'-0"	5'-0"	15.75	4'-6"	3'-6"	10.5	3'-6"	3'-0"
	22-1/2° BEND	15.75	4'-6"	3'-6"	7.5	3'-0"	2'-6"	5	2'-6"	2'-0"
	TEE W/8" OUTLET	40	7'-6"	5'-6"	20	5'-0"	4'-0"	13.5	4'-6"	3'-0"
18"	PLUG, CAP	52	8'-0"	6'-6"	26	6'-6"	4'-0"	17.5	5'-0"	3'-6"
	90° ELL	75	10'-0"	7'-6"	37.5	7'-6"	5'-0"	26	6'-6"	4'-0"
	45° BEND	40	7'-6"	5'-4"	20	5'-0"	4'-0"	14	4'-0"	3'-6"
	22-1/2° BEND	20	5'-0"	4'-0"	10.5	3'-6"	3'-0"	7.5	3'-0"	2'-6"
	TEE W/8" OUTLET	52	8'-0"	6'-6"	26	6'-6"	4'-0"	17.5	5'-0"	3'-6"

NOTES:

1. THRUST RESTRAINT SYSTEMS AT FITTINGS ARE DESIGNED FOR A MAXIMUM OF 150 PSI WATER PRESSURE
2. ALL THRUST BLOCKS SHALL BE POURED AGAINST UNDISTURBED SOIL.
3. THRUST RESTRAINT SYSTEM FOR VERTICAL PIPE BENDS SHALL BE APPROVED BY THE CITY ENGINEER.
4. THRUST RESTRAINT SYSTEMS FOR PIPES LARGER THAT 18" SHALL BE DESIGNED ON A CASE BY CASE BASIS AND SHALL BE APPROVED BY THE CITY ENGINEER.

APPROVED BY: Bettencourt/Rodriguez — PUBLIC WORKS DIRECTOR R.C.E. 45304 — Date — DATE

THRUST BLOCK DETAILS — W-3 2 of 2

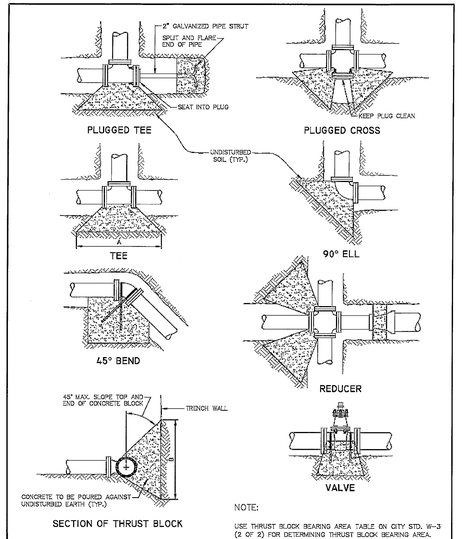

NOTE:

USE THRUST BLOCK BEARING AREA TABLE ON CITY STD. W-3 (2 OF 2) FOR DETERMINING THRUST BLOCK BEARING AREA.

APPROVED BY: Bettencourt/Rodriguez — PUBLIC WORKS DIRECTOR R.C.E. 45304 — Date — DATE

THRUST BLOCK DETAILS — W-3 1 of 2

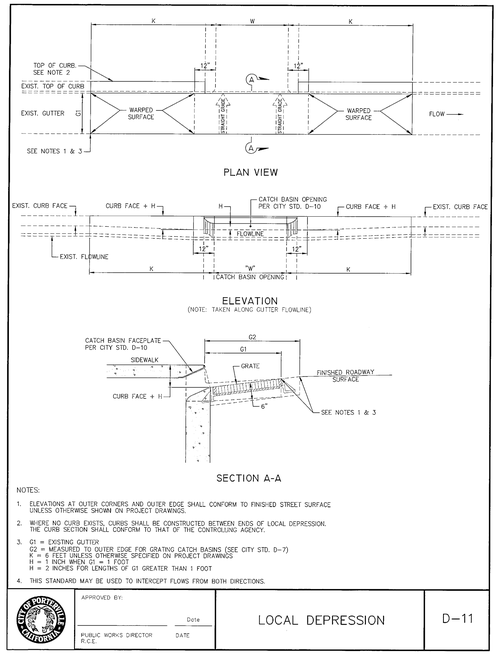

NOTES:

1. ELEVATIONS AT OUTER CORNERS AND OUTER EDGE SHALL CONFORM TO FINISHED STREET SURFACE UNLESS OTHERWISE SHOWN ON PROJECT DRAWINGS.
2. WHERE NO CURB EXISTS, CURBS SHALL BE CONSTRUCTED BETWEEN ENDS OF LOCAL DEPRESSION. THE CURB SECTION SHALL CONFORM TO THAT OF THE CONTROLLING AGENCY.
3. G1 = EXISTING GUTTER
   G2 = MEASURED TO OUTER EDGE FOR GRATING CATCH BASINS (SEE CITY STD. D-7)
   K = 6 FEET UNLESS OTHERWISE SPECIFIED ON PROJECT DRAWINGS
   H = 1 INCH WHEN G1 = 1 FOOT
   H = 2 INCHES FOR LENGTHS OF G1 GREATER THAN 1 FOOT
4. THIS STANDARD MAY BE USED TO INTERCEPT FLOWS FROM BOTH DIRECTIONS.

APPROVED BY: — PUBLIC WORKS DIRECTOR R.C.E. — Date — DATE

LOCAL DEPRESSION — D-11

CITY STANDARD DETAILS

rrm design group
rrmdesign.com | (805) 543-1794
3765 SOUTH HIGUERA STREET, SUITE 102
SAN LUIS OBISPO, CA 93401

THE INCLUDED DRAWINGS, SPECIFICATIONS, IDEAS, DESIGNS AND ARRANGEMENTS REPRESENTED THEREIN ARE AND SHALL REMAIN THE PROPERTY OF RRM DESIGN GROUP AND NO PART THEREOF SHALL BE COPIED, DISCLOSED TO OTHERS OR USED IN CONNECTION WITH ANY WORK OR PROJECT OTHER THAN THE SPECIFIC PROJECT FOR WHICH THEY HAVE BEEN PREPARED AND DEVELOPED WITHOUT THE WRITTEN CONSENT OF RRM DESIGN GROUP. VISUAL CONTACT WITH THESE DRAWINGS OR OTHERWISE RECEIVING THESE DOCUMENTS CONSTITUTES THE ABOVE RESTRICTIONS. SUBMITTAL OF THESE DOCUMENTS FOR PUBLIC AGENCY REVIEW SHALL NOT BE CONSIDERED A WAIVER OF RRM DESIGN GROUP'S RIGHTS.
RRM DESIGN GROUP COPYRIGHT 2023.
RRM IS A CALIFORNIA CORPORATION

REGISTERED PROFESSIONAL ENGINEER — WA VANG — C.E. 86967 — 08/30/2024 — CIVIL — STATE OF CALIFORNIA

CONSULTANT

LANE ENGINEERS INC.
CIVIL • STRUCTURAL • SURVEYING
979 N. BLACKSTONE STREET
TULARE, CALIFORNIA 93274
(559) 688-5263
www.laneengineers.com

AGENCY

FOURTH ST COMMUNITY CENTER AND PARK
HENDERSON AVE., PORTERVILLE, CA 93257
CITY STANDARD DETAILS

NO.	REVISION	DATE
1	PLAN CHEK REVISION 1	5/17/24

PROJECT MANAGER: LANCE WIERSCHEM
DRAWN BY: W.V. — CHECKED BY: A.P.O.
DATE: 2024.01.15
PROJECT NUMBER: 2883-01-RC22
SHEET: CC507

PLAN CHECK REVISION 1

LANE PROJECT NO. 22306

J:\Jobs\2022\22306\Dwg\Production Drawings\C7_Details.dwg, CC507, Aug 30, 2024 1:12pm, wa

CITY STANDARD DETAILS

STANDARDS FOR FIRE PROTECTION SYSTEMS

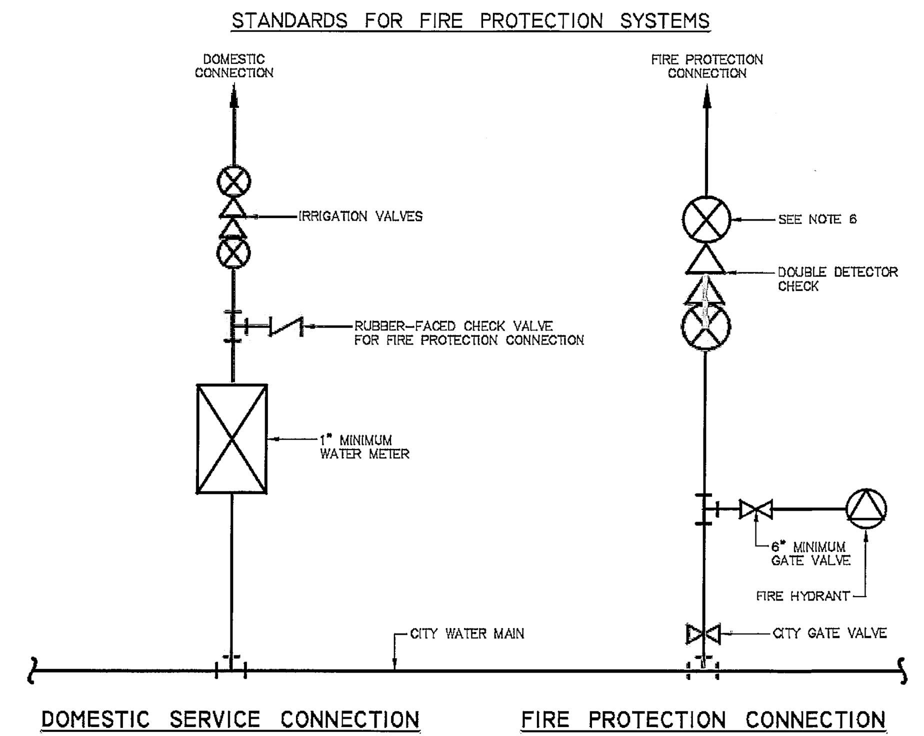

DOMESTIC SERVICE CONNECTION — FIRE PROTECTION CONNECTION

INSTALLATION AND INSPECTION REQUIREMENTS:

1. FIRE HYDRANTS, ON-STREET AND/OR ON-SITE, SHALL BE INSTALLED IN ACCORDANCE WITH CITY OF PORTERVILLE STANDARD SPECIFICATIONS. INSPECTION APPROVAL BY FIRE DEPARTMENT IS REQUIRED PRIOR TO ANY BACKFILL.
2. A MATERIALS INSPECTION IS REQUIRED BEFORE ASSEMBLING UNDERGROUND FIRE PROTECTION SYSTEMS. PORTERVILLE FIRE DEPARTMENT PLAN APPROVAL IS REQUIRED PRIOR TO CONSTRUCTION.
3. A PRESSURE TEST AT 200 P.S.I. FOR 2 HOURS WITNESSED BY THE PORTERVILLE FIRE DEPARTMENT IS REQUIRED FOR ALL SYSTEMS. PLEASE NOTE THAT THE UNDERGROUND FIRE PROTECTION SYSTEM CAN ONLY BE FILLED USING A JUMPER EQUIPPED WITH A BACKFLOW PREVENTION DEVICE ACCORDING TO CITY OF PORTERVILLE STANDARDS. PIPE MAY BE CENTER LOADED FOR THIS INSPECTION, HOWEVER, ALL THRUST BLOCKS AND JOINTS MUST BE EXPOSED. PLEASE ALSO NOTE THAT COATING AND WRAPPING OF BOLTS AND TIE RODS, IF REQUIRED, MUST BE COMPLETED BEFORE CALLING FOR AN INSPECTION.
4. A SUCCESSFUL BACTERIAL TEST AND FLUSHING WITNESSED BY THE PORTERVILLE FIRE DEPARTMENT IS REQUIRED BEFORE CONNECTING TO THE PUBLIC MAIN IS PERMITTED.
5. SEPARATE SUBMITTALS TO THE PORTERVILLE FIRE DEPARTMENT ARE REQUIRED FOR ABOVE GROUND FIRE PROTECTION SYSTEMS.
6. VALVES ON BACKFLOW DEVICES ARE NOT TO BE USED TO SUBSTITUTE FOR VALVES SHOWN ON DIAGRAM. BACKFLOW DEVICES MUST REMAIN IN ORIGINAL CONFIGURATION AS PURCHASED FROM MANUFACTURER.

APPROVED BY: Date — PUBLIC WORKS DIRECTOR R.C.E. 45304 — DATE

FIRE PROTECTION SYSTEM STANDARDS — W-11 2 of 2

STANDARDS FOR FIRE PROTECTION SYSTEMS

GENERAL:

1. ALL PRIVATE UNDERGROUND FIRE SYSTEMS, INCLUDING HYDRANT SYSTEMS AND UNDERGROUND MAINS FOR SPRINKLER SYSTEMS AND FIRE PUMPS SERVING SPRINKLER SYSTEMS, CROSS CONNECTED TO UNAPPROVED WATER SOURCES AND CONNECTED TO DOMESTIC WATER MAINS SHALL HAVE BACKFLOW PREVENTION AS REQUIRED BY AWWA M-14 FOR CLASSES III, IV, V AND VI FIRE SYSTEMS.
2. PLANS SHALL BE SUBMITTED FOR APPROVAL BY THE FIRE DEPARTMENT AND CITY MUNICIPAL UTILITIES DEPARTMENT PRIOR TO CONSTRUCTION. "AS-BUILT" DRAWINGS SHALL BE PROVIDED PRIOR TO CONSTRUCTION TO THE PUBLIC WATER SYSTEM. (THE SAME PLAN SUBMITTAL REQUIREMENTS APPLY TO INSTALLATIONS CONNECTED TO CALIFORNIA WATER SERVICE COMPANY MAINS.)
3. ALL UNDERGROUND FIRE PROTECTION SYSTEMS SHALL BE DISINFECTED PRIOR TO CONNECTING TO PUBLIC WATER SYSTEM IN ACCORDANCE WITH CITY OF PORTERVILLE STANDARD SPECIFICATION SECTION 02510.
4. WITHIN THE CITY WATER SERVICE AREA, ALL ON SITE FIRE HYDRANT SYSTEMS 300'-0" OR MORE FROM THE PROPERTY LINE SHALL HAVE A DETECTOR CHECK LOCATED AT THE PROPERTY LINE IMMEDIATELY DOWNSTREAM OF THE MAIN SHUT-OFF VALVE. PLANS AND SPECIFICATIONS SHALL BE SUBMITTED FOR APPROVAL BY THE MUNICIPAL UTILITIES DEPARTMENT.
5. SYSTEM DESIGN SHALL BE BASED ON THE CALIFORNIA FIRE CODE, APPLICABLE PROVISION OF NATIONAL FIRE PROTECTION ASSOCIATION STANDARDS 13 AND 24, AND REQUIREMENTS OF THE PORTERVILLE FIRE DEPARTMENT. NOTE: CALIFORNIA WATER SERVICE COMPANY MAY HAVE OTHER REQUIREMENTS WITH CONNECTION TO THEIR MAINS. THRUST BLOCK LOCATION AND THRUST BLOCK SIZE, HYDRANT SPACING, PIPE SIZES AND LENGTHS AND OTHER RELEVANT INFORMATION IS REQUIRED ON THE PLANS. PLANS MUST CLEARLY SHOW THAT BOLTS AND TIE RODS WILL BE COATED WITH A BITUMINOUS MATERIAL AND WRAPPED PRIOR TO COVERING.
6. THE PORTERVILLE FIRE DEPARTMENT REQUIRES PC305-DR14 C900 PIPE FOR PRESSURIZED UNDERGROUND MAINS. POST INDICATOR VALVES AND FIRE DEPARTMENT CONNECTIONS FOR SPRINKLER SYSTEMS SHALL BE AT LEAST 40 FEET FROM BUILDINGS. SECTIONAL VALVES SHALL BE *UL* LISTED FIRE PROTECTION VALVES. ALL VALVES CONTROLLING WATER SUPPLIES TO SPRINKLER SYSTEMS SHALL BE MONITORED BY A *UL* LISTED CENTRAL STATION. THIS REQUIRES THE CONTRACTOR TO PROVIDE PVC PIPE FOR LOW VOLTAGE CONNECTION OF THE VALVE'S TAMPER SWITCH TO THE FIRE ALARM PANEL NORMALLY LOCATED IN THE BUILDING. THIS REQUIREMENT IS MANDATORY, REGARDLESS IF THE BUILDING CONTAINS LESS THAN 100 SPRINKLER HEADS. TRACER WIRE IS REQUIRED FOR ALL UNDERGROUND MAINS FOR BOTH HYDRANT AND SPRINKLER SYSTEMS.

APPROVED BY: Date — PUBLIC WORKS DIRECTOR R.C.E. 45304 — DATE

FIRE PROTECTION SYSTEM STANDARDS — W-11 1 of 2

TYPICAL INSTALLATION

5' CONCRETE WALK NOT ADJACENT TO CURB

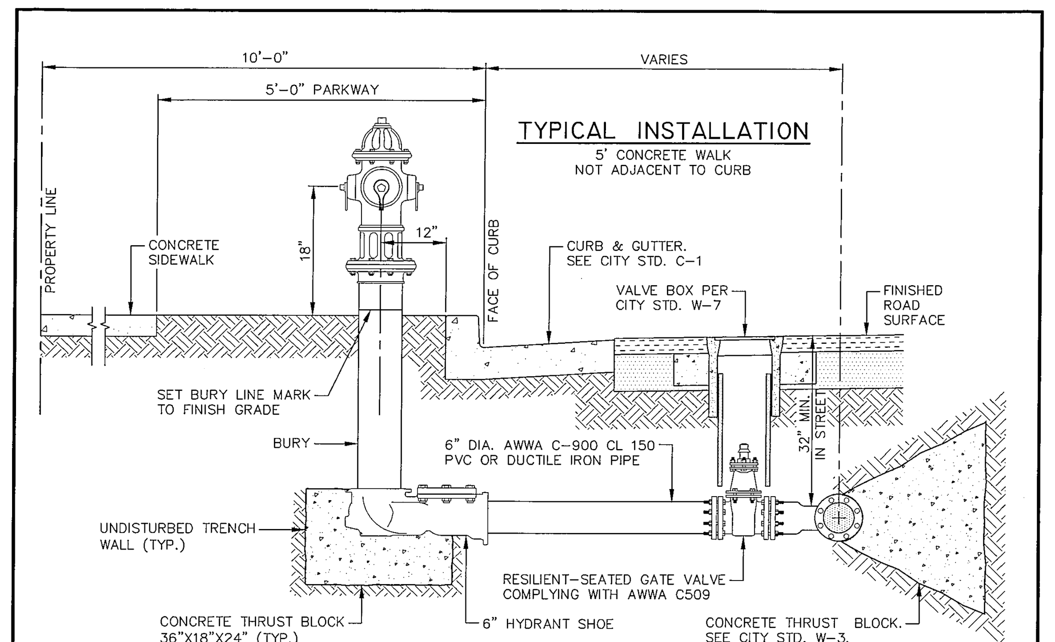

FIRE HYDRANT ASSEMBLY:

MUELLER A423 CENTURIAN, WATEROUS PACER NO. WB-67, AMERICAN DARLING, KENNEDY GUARDIAN, CLOW MEDALLION, OR CITY ENGINEER APPROVED EQUAL, COMPLETE WITH:

A. ONE 4-INCH N.S.T. PUMPER NOZZLE.
B. TWO 2-1/2-INCH N.S.T. HOSE NOZZLE.
C. HYDRANT VALVE OPENING SHALL BE 5-1/4-INCH, MINIMUM.
D. BURY SHALL BE 42-INCHES WITH PUSH ON FITTING.
E. STANDARD PENTAGON OPERATING NUT AND CAP NUT.
F. HYDRANT BODY PAINTED 'SAFETY YELLOW' – RUST-OLEUM HIGH PERFORMANCE PROTECTIVE ENAMEL NO. 242258 OR APPROVED EQUAL. SPRAY PAINT SHALL NOT BE ALLOWED.
G. BLUE TWO-WAY REFLECTIVE TRAFFIC MARKER OPPOSITE FIRE HYDRANT LOCATION, 6-INCHES FROM ROAD CENTERLINE TOWARD FIRE HYDRANT.
H. PLUG DRAIN HOLES.

HYDRANT "T" TO DUCTILE IRON PIPE OR PVC C-900 FOR NEW DEVELOPMENT:

CITY WATER SYSTEM: CONNECTION SHALL BE FLANGED OR APPROVED MECHANICAL JOINT SYSTEM

CONTACT RESPECTIVE WATER SYSTEM REGARDING CONNECTION TO PIPE BY OTHER MATERIAL.

GATE VALVES:

CLOW "RESILIENT WEDGE"
MUELLER "RESILIENT SEAT"
AMERICAN DARLING
KENNEDY RESILIENT
WATEROUS SERIES 500

APPROVED BY: Date — PUBLIC WORKS DIRECTOR — DATE

STANDARD FIRE HYDRANT ASSEMBLY — W-8.1

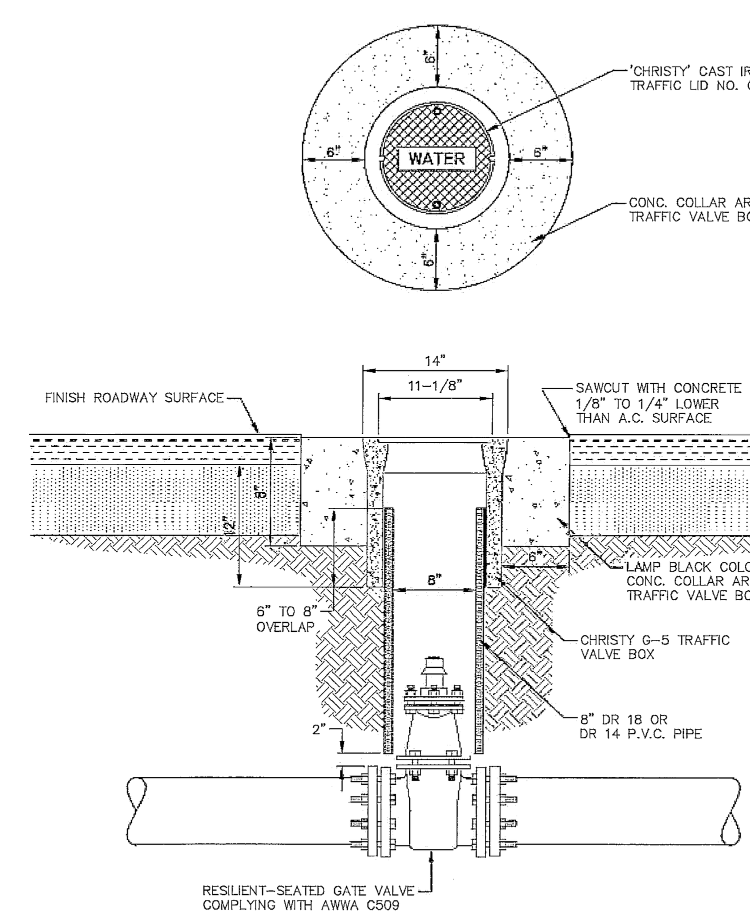

NOTE:

1. ALL MATERIALS AND WORKMANSHIP SHALL CONFORM TO THE REQUIREMENT OF THE STANDARD SPECIFICATIONS.
2. MIX 8 TO 10 POUNDS OF LAMP BLACK CONCRETE COLORING PER CUBIC YARD OF CONCRETE.
3. ALL CONCRETE SHALL BE 2500 PSI (5 SACK MIX).

STANDARD INSTALLATION

APPROVED BY: Date — PUBLIC WORKS DIRECTOR — DATE

VALVE AND VALVE BOX DETAILS — W-7

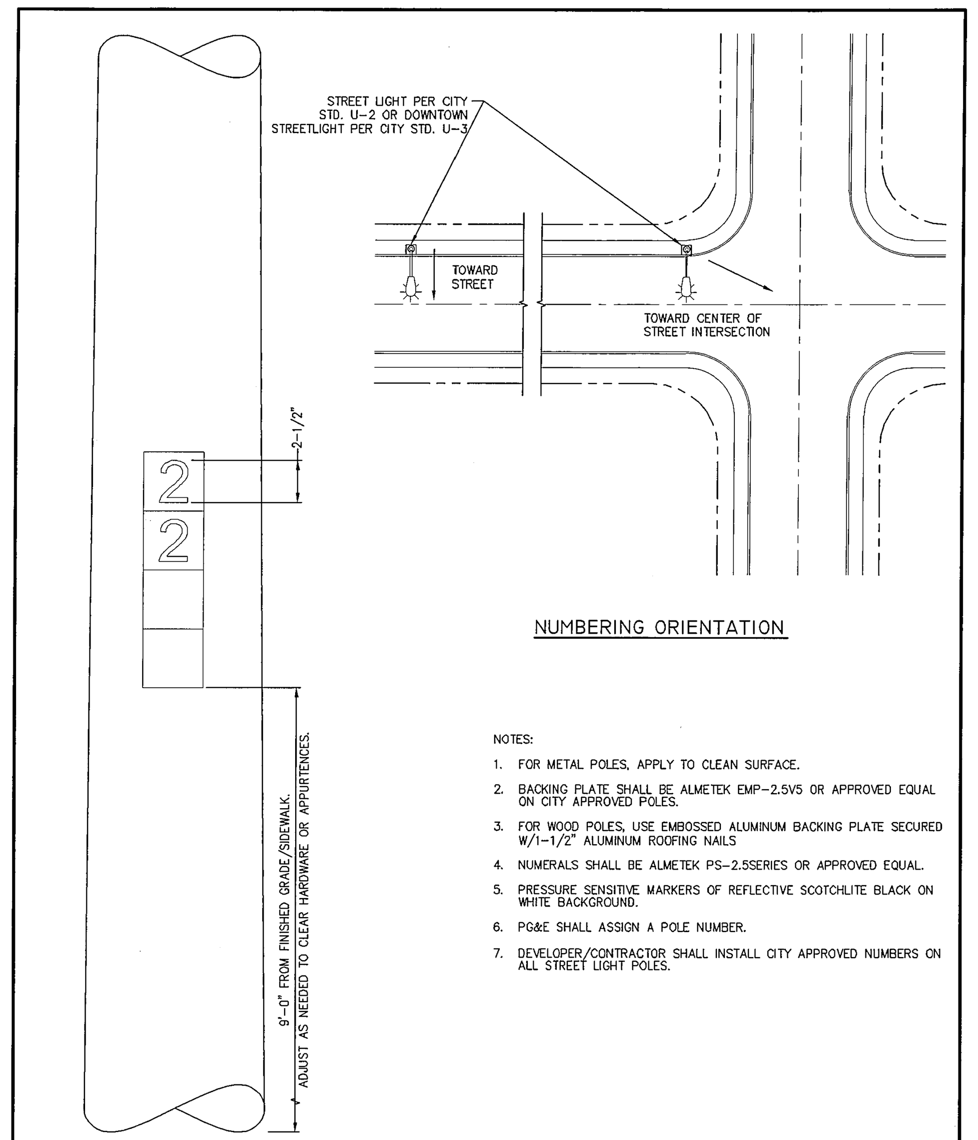

NUMBERING ORIENTATION

NOTES:

1. FOR METAL POLES, APPLY TO CLEAN SURFACE.
2. BACKING PLATE SHALL BE ALMETEK EMP-2.5V5 OR APPROVED EQUAL ON CITY APPROVED POLES.
3. FOR WOOD POLES, USE EMBOSSED ALUMINUM BACKING PLATE SECURED W/1-1/2" ALUMINUM ROOFING NAILS
4. NUMERALS SHALL BE ALMETEK PS-2.5SERIES OR APPROVED EQUAL.
5. PRESSURE SENSITIVE MARKERS OF REFLECTIVE SCOTCHLITE BLACK ON WHITE BACKGROUND.
6. PG&E SHALL ASSIGN A POLE NUMBER.
7. DEVELOPER/CONTRACTOR SHALL INSTALL CITY APPROVED NUMBERS ON ALL STREET LIGHT POLES.

APPROVED BY: Date — PUBLIC WORKS DIRECTOR R.C.E. 45304 — DATE

STREET LIGHT POLE NUMBERING — U-5

NOTES:

1. PULL BOXES SHALL BE GROUTED PRIOR TO INSTALLATION OF CONDUCTORS SLOPED TOWARD THE DRAIN HOLE. PLACE A LAYER OF ROOFING PAPER BETWEEN THE CRUSHED ROCK AND THE GROUT.
2. PULL LIDS BEFORE POURING CONCRETE AROUND PULL BOXES.
3. WRAP PULL BOX WITH ROOFING PAPER BEFORE BACKFILLING.
4. FUSE AT POINT OF SERVICE SHALL BE 60A IF #6 CONDUCTOR AND 40A IF #8 CONDUCTOR AND SHALL HAVE A TRON TYPE FUSE HOLDER (SINGLE POLE).
5. INSTALL A ONE-FOOT RING OF CONCRETE, FOUR INCHES DEEP, AROUND THE WRAPPED PULL BOX INSTALLED IN DIRT AREA, SLOPED TO DRAIN AWAY FROM THE PULL BOX.
6. ALL LIDS ON ALL UTILITY BOXES SHALL HAVE LOCKING BOLTS.

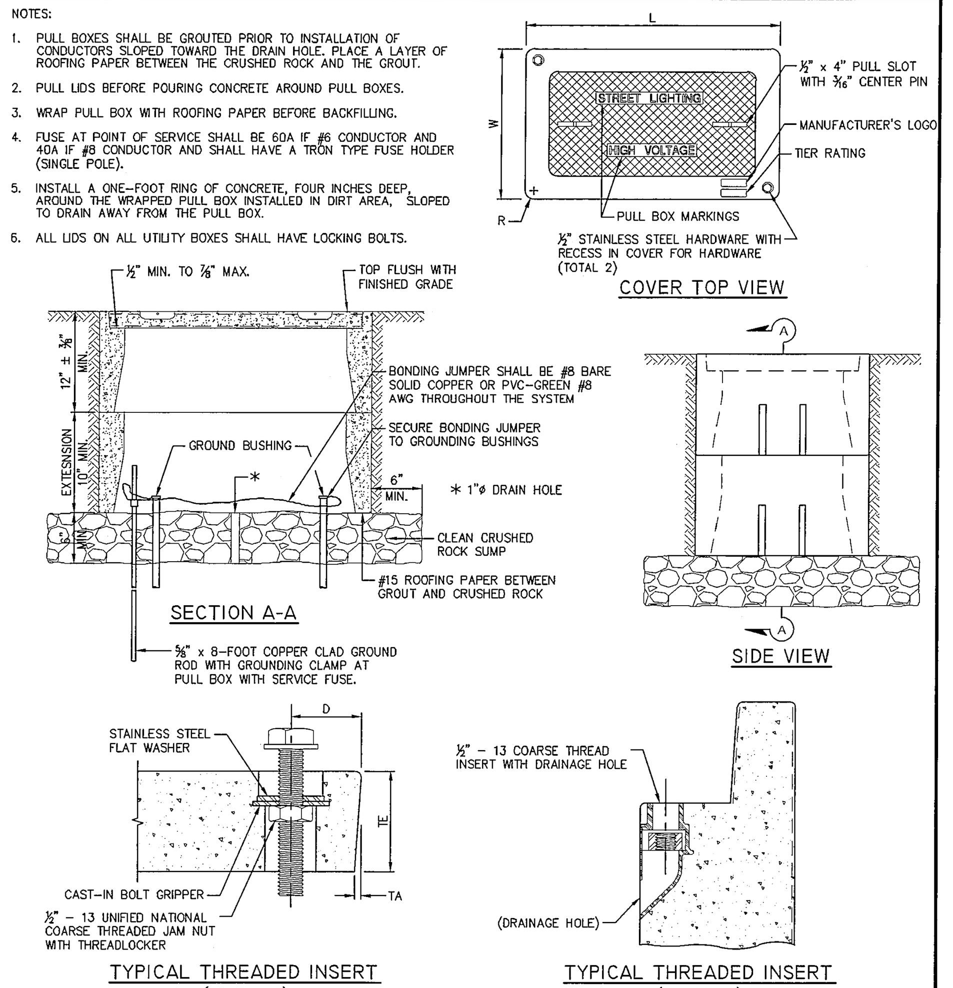

TYPICAL THREADED INSERT (OR SIMILAR) — TYPICAL THREADED INSERT (OR SIMILAR)

PULL BOX DIMENSION TABLE

PULL BOX	PULL BOX: MINIMUM DEPTH BOX	PULL BOX: MINIMUM DEPTH EXTENSION	PULL BOX: MAXIMUM WEIGHT	COVER: L	COVER: W	COVER: R	COVER: TE	COVER: TA	COVER: D	COVER: MAXIMUM WEIGHT
No. 3-1/2	1'-0"	10"	40 lbs.	1'-3 ⅜"	10 ⅛"	1 ⅜"	2"	⅛"	1 ¾"	30 lbs.
No. 5	1'-0"	10"	55 lbs.	1'-11 ¼"	1'-1 ¾"	1 ⅜"	2"	⅛"	1 ¾"	60 lbs.
No. 6	1'-0"	10"	70 lbs.	2'-6 ½"	1'-5 ½"	1 ⅜"	2"	⅛"	2"	85 lbs.

APPROVED BY: Date — PUBLIC WORKS DIRECTOR R.C.E. 45304 — DATE

STANDARD STREET LIGHT PULL BOX — U-4

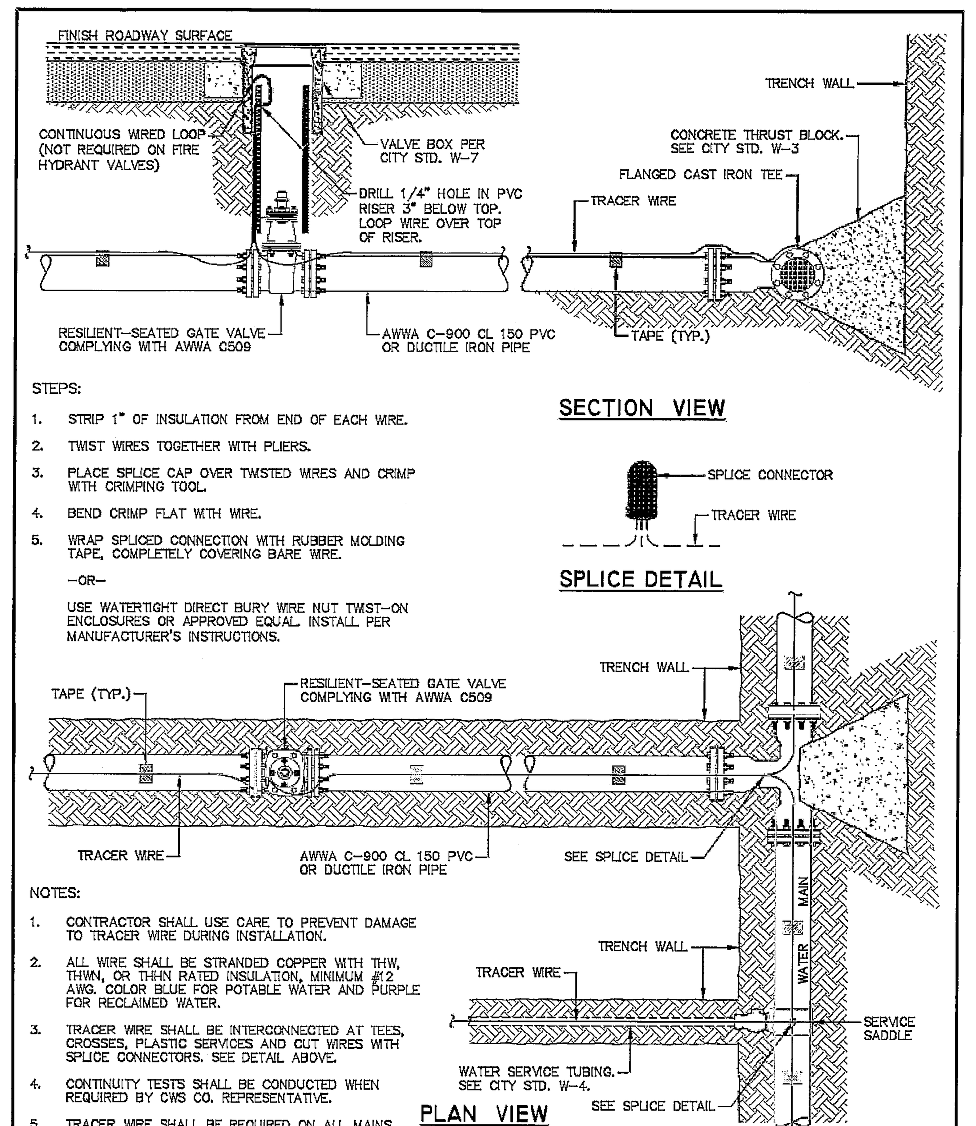

STEPS:

1. STRIP 1" OF INSULATION FROM END OF EACH WIRE.
2. TWIST WIRES TOGETHER WITH PLIERS.
3. PLACE SPLICE CAP OVER TWISTED WIRES AND CRIMP WITH CRIMPING TOOL.
4. BEND CRIMP FLAT WITH WIRE.
5. WRAP SPLICED CONNECTION WITH RUBBER MOLDING TAPE, COMPLETELY COVERING BARE WIRE.

–OR–

USE WATERTIGHT DIRECT BURY WIRE NUT TWIST-ON ENCLOSURES OR APPROVED EQUAL. INSTALL PER MANUFACTURER'S INSTRUCTIONS.

SECTION VIEW

SPLICE DETAIL

NOTES:

1. CONTRACTOR SHALL USE CARE TO PREVENT DAMAGE TO TRACER WIRE DURING INSTALLATION.
2. ALL WIRE SHALL BE STRANDED COPPER WITH THW, THWN, OR THHN RATED INSULATION, MINIMUM #12 AWG. COLOR BLUE FOR POTABLE WATER AND PURPLE FOR RECLAIMED WATER.
3. TRACER WIRE SHALL BE INTERCONNECTED AT TEES, CROSSES, PLASTIC SERVICES AND CUT WIRES WITH SPLICE CONNECTORS. SEE DETAIL ABOVE.
4. CONTINUITY TESTS SHALL BE CONDUCTED WHEN REQUIRED BY CWS CO. REPRESENTATIVE.
5. TRACER WIRE SHALL BE REQUIRED ON ALL MAINS.

PLAN VIEW

APPROVED BY: Date — PUBLIC WORKS DIRECTOR R.C.E. 45304 — DATE

TYPICAL TRACER WIRE INSTALLATION — W-27

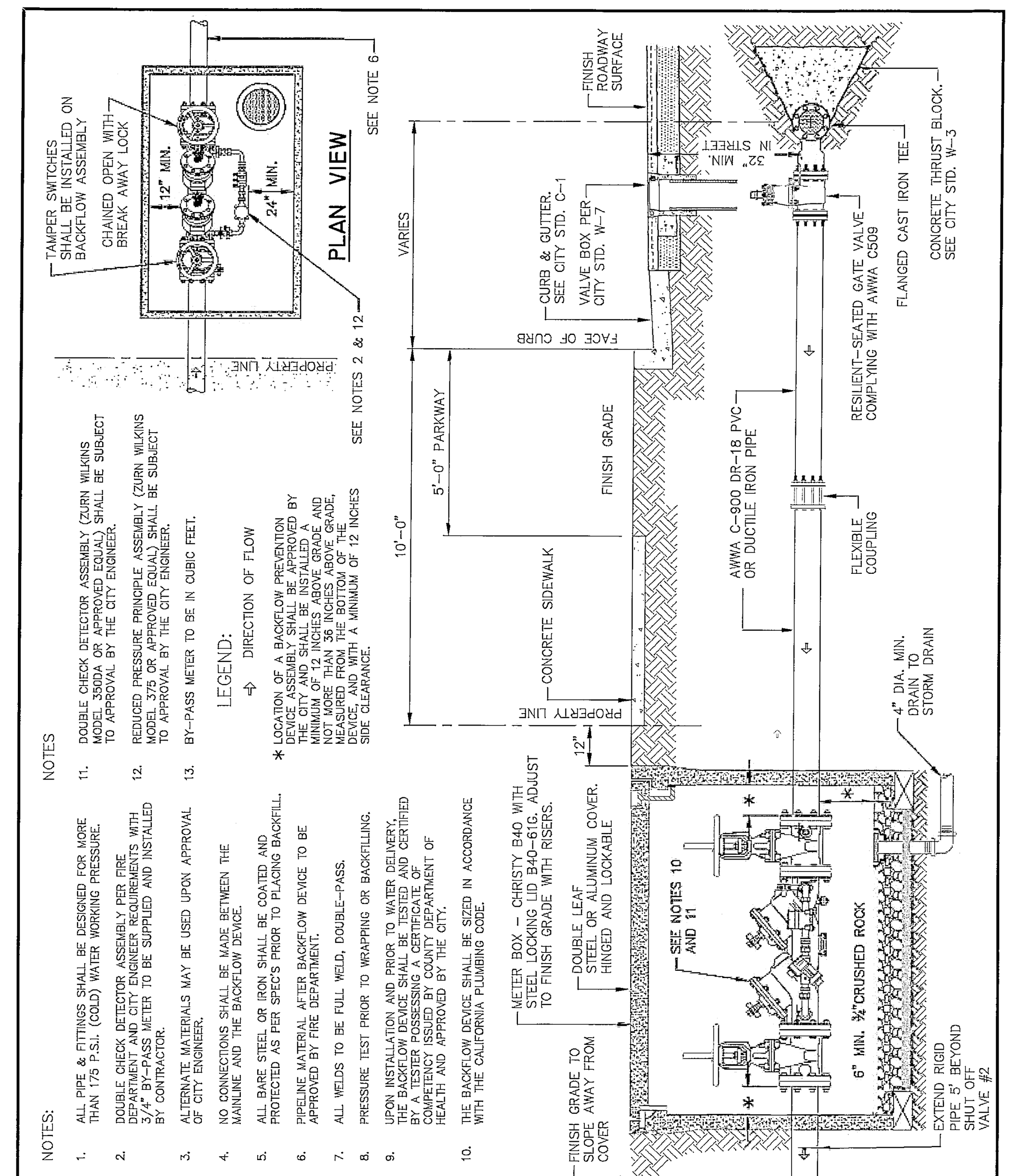

NOTES:

1. ALL PIPE & FITTINGS SHALL BE DESIGNED FOR MORE THAN 175 P.S.I. (COLD) WATER WORKING PRESSURE.
2. DOUBLE CHECK DETECTOR ASSEMBLY PER FIRE DEPARTMENT AND CITY ENGINEER REQUIREMENTS WITH 3/4" BY-PASS METER TO BE SUPPLIED AND INSTALLED BY CONTRACTOR.
3. ALTERNATE MATERIALS MAY BE USED UPON APPROVAL OF CITY ENGINEER.
4. NO CONNECTIONS SHALL BE MADE BETWEEN THE MAINLINE AND THE BACKFLOW DEVICE.
5. ALL BARE STEEL OR IRON SHALL BE COATED AND PROTECTED AS PER SPEC'S PRIOR TO PLACING BACKFILL.
6. PIPELINE MATERIAL AFTER BACKFLOW DEVICE TO BE APPROVED BY FIRE DEPARTMENT.
7. ALL WELDS TO BE FULL WELD, DOUBLE-PASS.
8. PRESSURE TEST PRIOR TO WRAPPING OR BACKFILLING.
9. UPON INSTALLATION AND PRIOR TO WATER DELIVERY, THE BACKFLOW DEVICE SHALL BE TESTED AND CERTIFIED BY A TESTER POSSESSING A CERTIFICATE OF COMPETENCY ISSUED BY COUNTY DEPARTMENT OF HEALTH AND APPROVED BY THE CITY.
10. THE BACKFLOW DEVICE SHALL BE SIZED IN ACCORDANCE WITH THE CALIFORNIA PLUMBING CODE.
11. DOUBLE CHECK DETECTOR ASSEMBLY (ZURN WILKINS MODEL 350DA OR APPROVED EQUAL) SHALL BE SUBJECT TO APPROVAL BY THE CITY ENGINEER.
12. REDUCED PRESSURE PRINCIPLE ASSEMBLY (ZURN WILKINS MODEL 375 OR APPROVED EQUAL) SHALL BE SUBJECT TO APPROVAL BY THE CITY ENGINEER.
13. BY-PASS METER TO BE IN CUBIC FEET.

LEGEND:

⇩ DIRECTION OF FLOW

* LOCATION OF A BACKFLOW PREVENTION DEVICE ASSEMBLY SHALL BE APPROVED BY THE CITY AND SHALL BE INSTALLED A MINIMUM OF 12 INCHES ABOVE GRADE AND NOT MORE THAN 36 INCHES ABOVE GRADE, MEASURED FROM THE BOTTOM OF THE DEVICE, AND WITH A MINIMUM OF 12 INCHES SIDE CLEARANCE.

APPROVED BY: Date — PUBLIC WORKS DIRECTOR — DATE

6", 8" AND 10" FIRE SERVICE — W-12

rrm design group
rrmdesign.com | (805) 543-1794
3765 SOUTH HIGUERA STREET, SUITE 102
SAN LUIS OBISPO, CA 93401

THE INCLUDED DRAWINGS, SPECIFICATIONS, IDEAS, DESIGNS AND ARRANGEMENTS REPRESENTED THEREBY ARE AND SHALL REMAIN THE PROPERTY OF RRM DESIGN GROUP AND NO PART THEREOF SHALL BE COPIED, DISCLOSED TO OTHERS OR USED IN CONNECTION WITH ANY WORK OR PROJECT OTHER THAN THE SPECIFIED PROJECT FOR WHICH THEY HAVE BEEN PREPARED AND DEVELOPED WITHOUT THE WRITTEN CONSENT OF RRM DESIGN GROUP. VISUAL CONTACT WITH THESE DRAWINGS OR SPECIFICATIONS SHALL CONSTITUTE CONCLUSIVE EVIDENCE OF ACCEPTANCE OF THESE RESTRICTIONS. SUBMITTAL OF THESE DOCUMENTS FOR PUBLIC AGENCY REVIEW SHALL NOT BE CONSIDERED A WAIVER OF RRM DESIGN GROUP'S RIGHTS.
RRM DESIGN GROUP COPYRIGHT 2023.
RRM IS A CALIFORNIA CORPORATION

REGISTERED PROFESSIONAL ENGINEER — WA VANG — R.C.E. 86967 — 08/30/2024 — CIVIL — STATE OF CALIFORNIA

CONSULTANT

LANE ENGINEERS INC.
CIVIL • STRUCTURAL • SURVEYING
979 N. BLACKSTONE STREET
TULARE, CALIFORNIA 93274
(559) 688-5263
www.laneengineers.com

AGENCY

FOURTH ST COMMUNITY CENTER AND PARK

HENDERSON AVE., PORTERVILLE, CA 93257

CITY STANDARD DETAILS

NO.	REVISION	DATE
1	PLAN CHEK REVISION 1	5/17/24

PROJECT MANAGER: LANCE WIERSCHEM
DRAWN BY: W.V. — CHECKED BY: A.P.O.
DATE: 2024.01.15
PROJECT NUMBER: 2883-01-RC22
SHEET: CC508

PLAN CHECK REVISION 1

LANE PROJECT NO. 22306

J:\Jobs\2022\22306\Dwg\Production Drawings\C7_Details.dwg, CC508, Aug 30, 2024 1:13pm, wa

J:\Jobs\2022\22306\Dwg\Production Drawings\C7_Details.dwg, CC508, Aug 30, 2024 1:13pm, wa

KEY TO MASTER CONSTRUCTION SCHEDULE

THE MASTER CONSTRUCTION SCHEDULE LISTS THE PROPOSED IMPROVEMENTS REQUIRED TO CONSTRUCT THE PROJECT. WHILE THE LIST IS COMPREHENSIVE, WE DO NOT REPRESENT THAT IT INCLUDES ALL ELEMENTS NEEDED TO CONSTRUCT THE PROJECT. THE INFORMATION BELOW IS FOR THE CONVENIENCE OF THE CONTRACTOR ONLY.

- PROPOSED IMPROVEMENT SECTION
- ITEM, TYPE AND DESCRIPTION
- PRIMARY DETAIL (NUMBER AND SHEET)
- ADDITIONAL DETAIL REFERENCE(S) (SECTIONS/ELEVATIONS, 3D DRAWINGS, TRANSITION OR CONNECTION DETAILS)
- SPECIFICATION REFERENCE

JOINTING				
SYMBOL	DESCRIPTION	DETAIL	RELATED DETAIL(S)	SPEC. SECTION(S)

KEYNOTE SYMBOLS ARE REPRESENTED ON THE PLANS WITH A KEYNOTE CALLOUT.

KEYNOTE CALLOUT:

IF SYMBOL IS BLANK, REFER TO DETAIL CALLOUT ON THE PLANS.

DETAIL CALLOUT: X / Y — 'X' = DETAIL NUMBER, 'Y' = PAGE NUMBER

THE FOLLOWING LIST OF PROPOSED IMPROVMENT SECTIONS HAVE BEEN INCORPORATED WITHIN THIS DRAWING SET:

PA	PAVING AND SURFACING	UT	UNDERGROUND UTILITIES
JO	JOINTING	LI	SITE LIGHTING AND ELECTRICAL
SR	STAIRS AND RAMPS	SI	SIGNAGE AND STRIPING
WC	WALLS AND CURBS	PE	PLAY EQUIPMENT
SF	SITE FURNISHINGS	FI	FITNESS EQUIPMENT
FR	FENCES, RAILINGS AND GATES	MI	MISCELLANEOUS
SS	SITE STRUCTURES	SP	SPECIALTY
DR	DRAINAGE AND BIO-RETENTION	EX	EXISTING TO REMAIN
PL	PLANTING AND IRRIGATION		

FOURTH ST. PARK MASTER CONSTRUCTION SCHEDULE

PAVING AND SURFACING (PA)

SYMBOL	DESCRIPTION	DETAIL	RELATED DETAIL(S)	SPEC. SECTION(S)
	SIDEWALK CONSTRUCTION		C-7/CC505 24/CC501	
	ASHPALT CONCRETE PAVING		32/CC501	
	ASPHALT PAVING AT PUMP TRACK		1/PT-6.0	
	ENGINEERED WOOD FIBER	2/LC501		32 1813.13
	POURED-IN-PLACE RUBBER SURFACING COLORS: SEE SPECS	4/LC501		32 1813.13
	SYNTHETIC TURF	3/LC501		32 1813
	STABILIZED DECOMPOSED GRANITE COLOR: CALIFORNIA GOLD	1/LC501		32 1453
	TACTILE WARNING MAT		13/CC502	

JOINTING (JO)

CODE	DESCRIPTION	DETAIL	RELATED DETAIL(S)	SPEC. SECTION(S)
JO-01	EXPANSION JOINT		31/CC501	
JO-02	CONTROL JOINT		21/CC501	

STAIRS AND RAMPS (SR)

SYMBOL	DESCRIPTION	DETAIL	RELATED DETAIL(S)	SPEC. SECTION(S)
SR-01	PARALLEL CURB RAMP		33/CC502	
SR-02	ACCESSIBILITY RAMP		14/CC502	
SR-03	ACCESS RAMP AT PLAYGROUND	1/LC503		
SR-04	SWITCHBACK RAMP	3/LC502		
SR-05	STAIRS	6/LC502		

WALLS AND CURBS (WC)

CODE	DESCRIPTION	DETAIL	RELATED DETAIL(S)	SPEC. SECTION(S)
WC-01	CONCRETE SEAT WALL	1/LC502		
WC-02	CONCRETE RETAINING WALL AT TERRACE	4/LC502		
WC-03	TERRACE WALLS	4/LC502		
WC-04	FLUSH CURB AT DECOMPOSED GRANITE	5/LC501		
WC-05	CONCRETE CURB AND GUTTER		41/CC501	
WC-06	PLAY CURB	6/LC501		
WC-07	MOW CURB	9/LC501		

SITE FURNISHINGS (SF)

CODE	DESCRIPTION	DETAIL	RELATED DETAIL(S)	SPEC. SECTION(S)
SF-01	BENCH TYPE 1: BACKED BENCH		SEE SPECS	32 3300
SF-02	BENCH TYPE 2: BACKLESS BENCH		SEE SPECS	32 3300
SF-03	6FT RECTANGULAR PICNIC TABLE	6/LC503	SEE SPECS	32 3300
SF-04	6FT RECTANGULAR ACCESSIBLE PICNIC TABLE ONE SIDE	6/LC503	SEE SPECS	32 3300
SF-05	6FT TABLE BENCH COMBO		SEE SPECS	32 3300
SF-06	8FT RECTANGULAR PICNIC TABLE		SEE SPECS	32 3300
SF-07	8FT RECTANGULAR ACCESSIBLE PICNIC TABLE		SEE SPECS	32 3300
SF-08	BIKE RACK		SEE SPECS	32 3300
SF-09	BIKE FIXIT STATION		SEE SPECS	32 3300
SF-10	WASTE & RECYCLING RECEPTACLE		SEE SPECS	32 3300
SF-11	PEDESTAL BOTTLE FILLER/DRINK FOUNTAIN		SEE SPECS	32 3300
SF-12	BOLLARD LIGHTING		SEE SPECS	

FENCES, RAILINGS, AND GATES (FR)

CODE	DESCRIPTION	DETAIL	RELATED DETAIL(S)	SPEC. SECTION(S)
FR-01	WOOD RAIL FENCE	2/LC503		
FR-02	MINI PITCH FENCE		SEE SPECS	11 6833
FR-03	STAIR HANDRAIL FINISH: GALVINIZED	5/LC502		
FR-04	RAMP HANDRAIL FINISH: GALVINIZED	7/LC502		

SITE STRUCTURES (SS)

CODE	DESCRIPTION	DETAIL	RELATED DETAIL(S)	SPEC. SECTION(S)
SS-01	SHADE STRUCTURE AT MINI PITCH		SEE SPECS	13 3000
SS-02	CANTILEVERED SHADE STRUCTURE AT PICNIC & SPLASHPAD		SEE SPECS	13 3000
SS-03	SHADE STRUCTURE AT CHALLENGE COURSE		SEE SPECS	13 3100
SS-04	SHADE STRUCTURE AT PUMP TRACK		SEE SPECS	13 3000
SS-05	TRELLIS SEE 09.9000E/A101 AND S-221		H/S-403	

DRAINAGE AND BIO-RETENTION (DR)

CODE	DESCRIPTION	DETAIL	RELATED DETAIL(S)	SPEC. SECTION(S)
DR-01	BIORETENTION AREA		34/CC503	
DR-02	CATCH BASIN		D-5.CC507	
DR-03	DRAIN INLET		12/CC504 13/CC504 21/CC504 32/CC504 42/CC504	
DR-04	ENERGY DISSIPATION DEVICE		33/CC504	

PLANTING AND IRRIGATION (PL)

CODE	DESCRIPTION	DETAIL	RELATED DETAIL(S)	SPEC. SECTION(S)
PL-01	PLANTER AREA SEE LP101-110 AND LI101-110			32 9300
PL-02	TURF AREA SEE LP101-110 AND LI101-110			32 9300

UNDERGROUND UTILITIES (UT)

CODE	DESCRIPTION	DETAIL	RELATED DETAIL(S)	SPEC. SECTION(S)
UT-01	REFER TO SHEET CU100 FOR UNDERGROUND UTILITY DETAILS			
UT-02	FDC CONNECTION		22/CC502	
UT-03	FIRE HYDRANT		W8.1/CC50 8	
UT-04	8" DOUBLE CHECK DETECTOR ASSEMBLY		W-12/CC50 8	
UT-05	4" DOMESTIC WATER BACKFLOW PREVENTER			

SITE LIGHTING AND ELECTRICAL (LI)

CODE	DESCRIPTION	DETAIL	RELATED DETAIL(S)	SPEC. SECTION(S)
LI-01	POLE LIGHT SEE EG101			
LI-02	EV CHARGING STATION SEE SHEET ES102			
LI-03	FUTURE SCE LIGHT POLE CONDUIT AND HANDPULLS TO BE PROVIDED BY CONTRACTOR. CITY TO COORDINATE POLE INSTALL WITH SCE.			
LI-04	S.C.E. UTILITY TRANSFORMER SEE 12/ES102			

SIGNAGE AND STRIPING (SI)

CODE	DESCRIPTION	DETAIL	RELATED DETAIL(S)	SPEC. SECTION(S)
SI-01	ENTRY MONUMENT SIGNAGE	5/LC503		
SI-02	RECYCLED WATER SIGN	7/LC503		
SI-03	SIGNAGE SEE CH101-CH103			
SI-04	PARKING SPACE STRIPING SEE CH101-CH103			
SI-05	ACCESSIBLE PARKING SPACE STRIPING SEE CH101-CH103			
SI-06	ACCESSIBLE EV PARKING SPACE STRIPING		32/CC503	
SI-07	EV PARKING SPACE MARKING		32/CC503	
SI-08	UNAUTHORIZED VEHICLE SIGN		42/CC502	

PLAY EQUIPMENT (PE)

CODE	DESCRIPTION	DETAIL	RELATED DETAIL(S)	SPEC. SECTION(S)
PE-01	ACCESSIBLE PLAY STRUCTURE		SEE SPECS	11 6813
PE-02	SAUCER SWING		SEE SPECS	11 6813

FITNESS/ATHLETIC EQUIPMENT (FI)

CODE	DESCRIPTION	DETAIL	RELATED DETAIL(S)	SPEC. SECTION(S)
FI-01	CHALLENGE COURSE OBSTACLE 1 FLOATING BOARDS		SEE SPECS	11 6813
FI-02	CHALLENGE COURSE OBSTACLE 2 NINJA STEPS		SEE SPECS	11 6813
FI-03	CHALLENGE COURSE OBSTACLE 3 AGILITY TRAINERS		SEE SPECS	11 6813
FI-04	CHALLENGE COURSE OBSTACLE 4 SWAY STEPS		SEE SPECS	11 6813
FI-05	CHALLENGE COURSE OBSTACLE 5 VAULT WALL		SEE SPECS	11 6813
FI-06	CHALLENGE COURSE OBSTACLE 6 TRAVERSE WALL		SEE SPECS	11 6813
FI-07	CHALLENGE COURSE OBSTACLE 7 U-TURN RAMP		SEE SPECS	11 6813
FI-09	PAGOSA CLIMBING BOULDER		SEE SPECS	11 6813
FI-10	STEPPER W/ ADJUSTABLE RESISTANCE UBX292		SEE SPECS	11 6813
FI-11	BENCH PRESS W/ ADJUSTABLE RESISTANCE UBX293		SEE SPECS	11 6813
FI-12	ROWER W/ ADJUSTABLE RESISTANCE UBX290		SEE SPECS	11 6813
FI-13	ARM CURL W/ ADJUSTABLE RESISTANCE UBX255		SEE SPECS	11 6813
FI-14	SIT UP BENCH UBX223		SEE SPECS	11 6813

MISCELLANEOUS (MI)

CODE	DESCRIPTION	DETAIL	RELATED DETAIL(S)	SPEC. SECTION(S)
MI-01	LANDSCAPE BOULDER	3/LC503		32 4000
MI-02	LANDSCAPE BARRIER CURB		12/CC501	

SPECIALTY (SP)

CODE	DESCRIPTION	DETAIL	RELATED DETAIL(S)	SPEC. SECTION(S)
SP-01	TRASH ENCLOSURE		RR-2/CC506 AS102	07 4000
SP-02	SPLASH PAD SEE SPLASHPAD DRAWINGS FOR DETAILS			13 1400
SP-03	SPLASHPAD SUBSURFACE RESERVOIR SEE SPLASHPAD AND IRRIGATION DRAWINGS FOR DETAILS			13 1400
SP-04	FLUSH ACCESSIBLE LOCKABLE DOOR SEE SPLASHPAD DRAWINGS FOR DETAILS			13 1400
SP-05	SPLASH PAD MANIFOLD CABINET		SP-PD-001	
SP-06	MINI PITCH KIT		SEE SPECS	11 6833
SP-07	BIKE PUMP TRACK SEE PT-SERIES SHEETS FOR DETAILS			32 1801 32 2001

EXISTING TO REMAIN

CODE	DESCRIPTION	DETAIL
EX-01	FIRE SERVICE, PROTECT IN PLACE SEE CG101	
EX-02	4" DOMESTIC BACKFLOW PREVENTER, PROTECT IN PLACE SEE CU101	
EX-03	2" IRRIGATION METER, PROTECT IN PLACE SEE LI101	
EX-04	FIRE HYDRANT, PROTECT IN PLACE SEE CG101	
EX-05	FENCING, PROTECT IN PLACE	
EX-06	TREE, VARIOUS SIZES, PROTECT IN PLACE	
EX-07	TRAIL, PROTECT IN PLACE	
EX-08	BIKE PATH SIGN, PROTECT IN PLACE	
EX-09	UTILITY POLE AND LINES, PROTECT IN PLACE	

rrm design group
rrmdesign.com | (805) 543-1794
3765 SOUTH HIGUERA STREET, SUITE 102
SAN LUIS OBISPO, CA 93401

THE INCLUDED DRAWINGS, SPECIFICATIONS, IDEAS, DESIGNS AND ARRANGEMENTS REPRESENTED THEREBY ARE AND SHALL REMAIN THE PROPERTY OF RRM DESIGN GROUP AND NO PART THEREOF SHALL BE COPIED, DISCLOSED TO OTHERS OR USED IN CONNECTION WITH ANY WORK OR PROJECT OTHER THAN THE SPECIFIED PROJECT FOR WHICH THEY HAVE BEEN PREPARED AND DEVELOPED WITHOUT THE WRITTEN CONSENT OF RRM DESIGN GROUP. VISUAL CONTACT WITH THESE DRAWINGS OR SPECIFICATIONS SHALL CONSTITUTE CONCLUSIVE EVIDENCE OF ACCEPTANCE OF THESE RESTRICTIONS. SUBMITTAL OF THESE DOCUMENTS FOR PUBLIC AGENCY REVIEW SHALL NOT BE CONSIDERED A WAIVER OF RRM DESIGN GROUP'S RIGHTS.
RRM DESIGN GROUP COPYRIGHT 2024.
RRM IS A CALIFORNIA CORPORATION

LICENSED LANDSCAPE ARCHITECT
LANCE WIERSCHEM LIC. #6210
SIGNATURE
07.31.2026
EXPIRATION DATE
DATE
STATE OF CALIFORNIA

CONSULTANT

AGENCY

FOURTH ST COMMUNITY CENTER AND PARK

HENDERSON AVE., PORTERVILLE, CA 93257

CONSTRUCTION NOTES AND SCHEDULE

NO.	REVISION	DATE
△		
△		
△		
△		
△		
△		

PLAN CHECK REVISION 2

PROJECT MANAGER: LW
DRAWN BY: DK
CHECKED BY: LW
DATE: 2024.09.19
PROJECT NUMBER: 2883-01-RC22
SHEET: LC001

N:\2800\2883-01-RC22-Porterville-Fourth-St-Park-Design\Landscape-Architecture\Task-L2-ConDocs\Sheet-Files\LC-2883-01.dwg, LC001, Sep 25, 2024 8:58am, LDWierschem

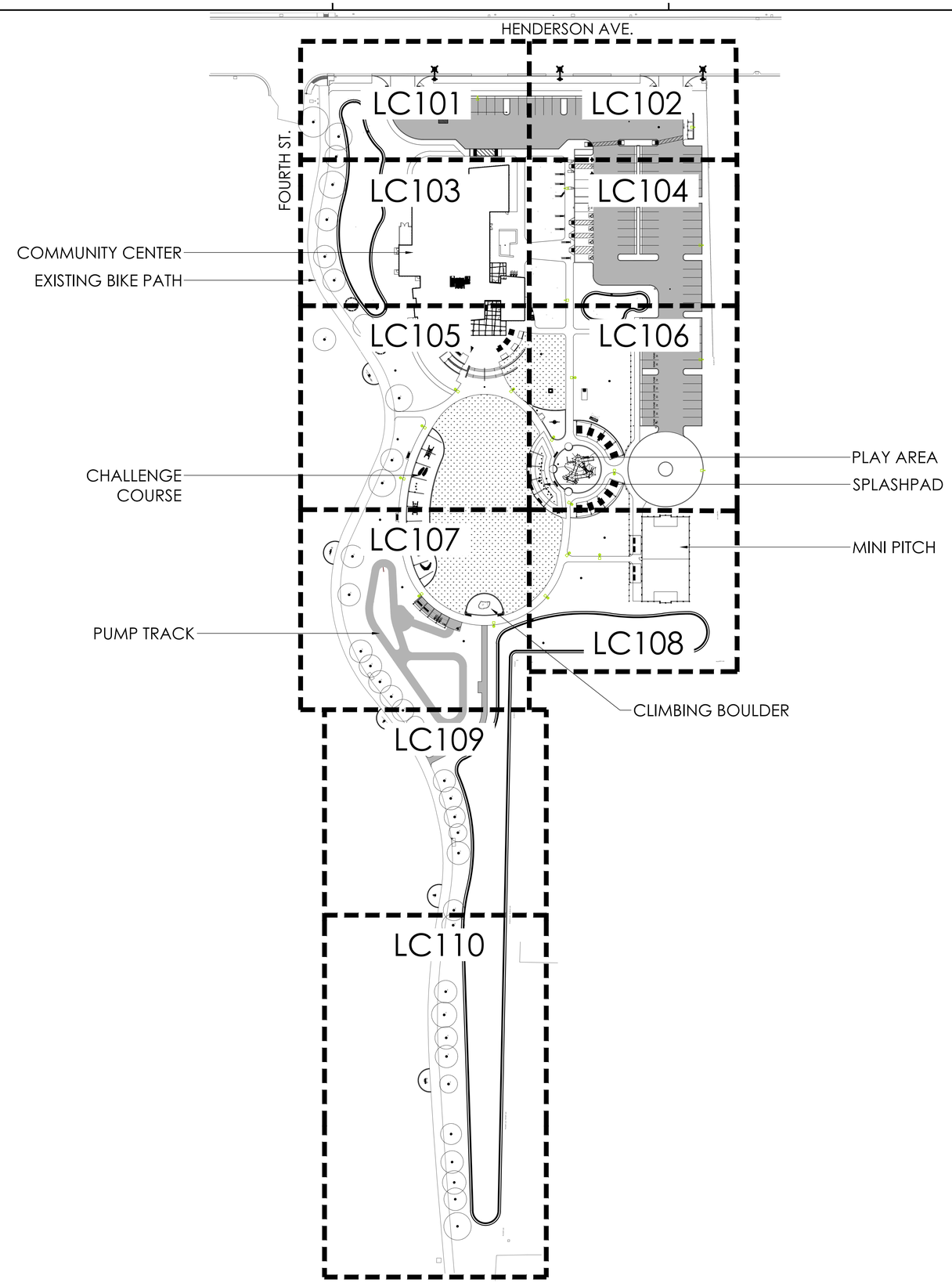

0 20 40 60 120 180 feet
1"=60'

rrm design group

rrmdesign.com | (805) 543-1794
3765 SOUTH HIGUERA STREET, SUITE 102
SAN LUIS OBISPO, CA 93401

THE INCLUDED DRAWINGS, SPECIFICATIONS, IDEAS, DESIGNS AND ARRANGEMENTS REPRESENTED THEREBY ARE AND SHALL REMAIN THE PROPERTY OF RRM DESIGN GROUP AND NO PART THEREOF SHALL BE COPIED, DISCLOSED TO OTHERS OR USED IN CONNECTION WITH ANY WORK OR PROJECT OTHER THAN THE SPECIFIED PROJECT FOR WHICH THEY HAVE BEEN PREPARED AND DEVELOPED WITHOUT THE WRITTEN CONSENT OF RRM DESIGN GROUP. VISUAL CONTACT WITH THESE DRAWINGS OR SPECIFICATIONS SHALL CONSTITUTE CONCLUSIVE EVIDENCE OF ACCEPTANCE OF THESE RESTRICTIONS. SUBMITTAL OF THESE DOCUMENTS FOR PUBLIC AGENCY REVIEW SHALL NOT BE CONSIDERED A WAIVER OF RRM DESIGN GROUP'S RIGHTS.
RRM DESIGN GROUP COPYRIGHT 2024.
RRM IS A CALIFORNIA CORPORATION

LICENSED LANDSCAPE ARCHITECT
LANCE WIERSCHEM LIC. #6210
SIGNATURE
07.31.2026
EXPIRATION DATE
DATE
STATE OF CALIFORNIA

CONSULTANT

AGENCY

FOURTH ST COMMUNITY CENTER AND PARK
HENDERSON AVE., PORTERVILLE, CA 93257

SITE REFERENCE PLAN AND KEY MAP

NO.	REVISION	DATE
△		
△		
△		
△		
△		
△		

PROJECT MANAGER
LW
DRAWN BY
DK
CHECKED BY
LM
DATE
2024.09.19
PROJECT NUMBER
2883-01-RC22
SHEET
LC100

PLAN CHECK REVISION 2

N:\2800\2883-01-RC22-Porterville-Fourth-St-Park-Design\Landscape-Architecture\Task-L2-ConDocs\Sheet-Files\LC-2883-01.dwg, LC100, Sep 24, 2024 10:59am, LDWierschem

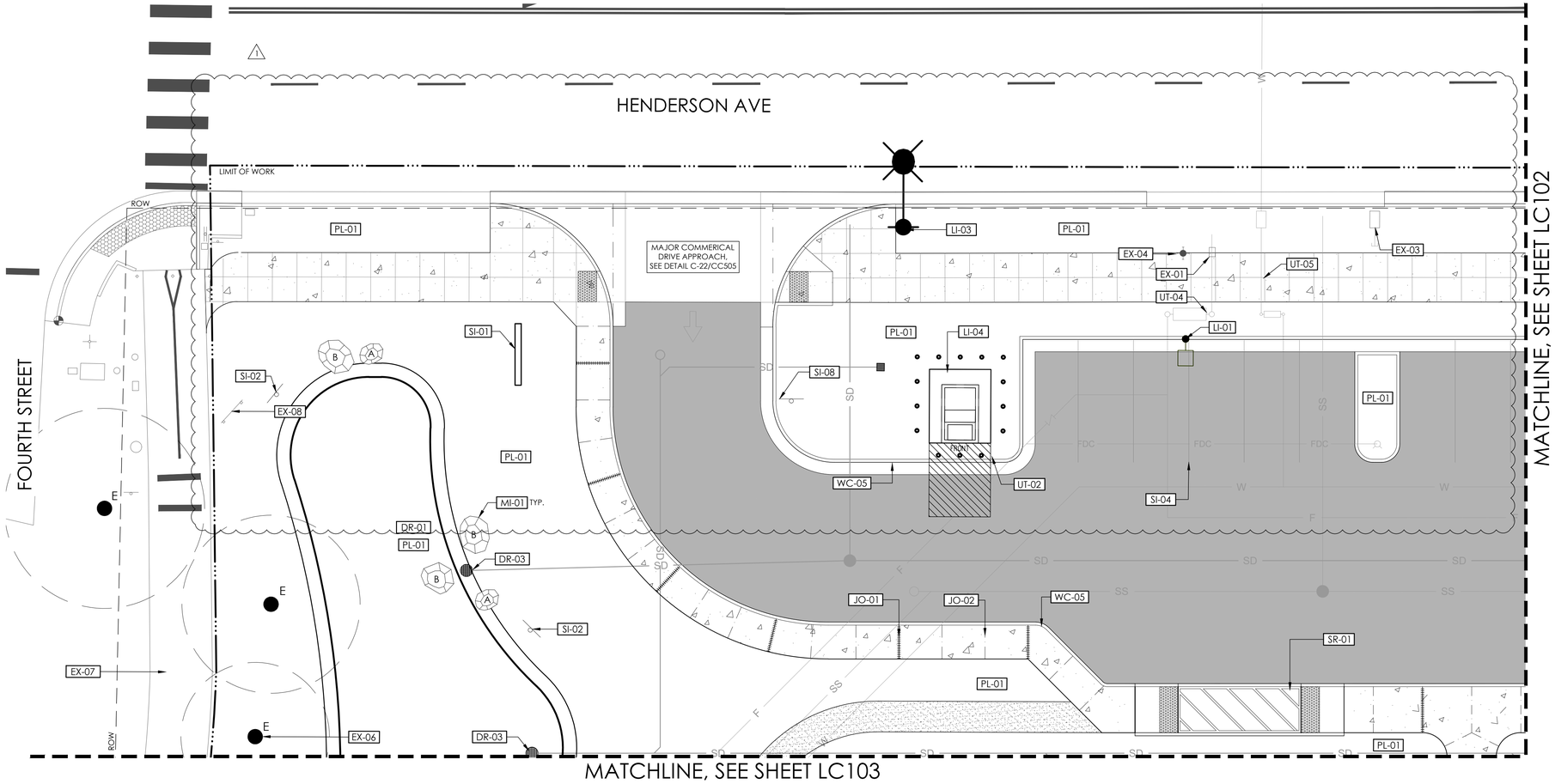

CONSTRUCTION SCHEDULE - LC101

PAVING AND SURFACING (PA)

SYMBOL	DESCRIPTION	DETAIL
	SIDEWALK CONSTRUCTION	
	ASHPALT CONCRETE PAVING	
	STABILIZED DECOMPOSED GRANITE COLOR: CALIFORNIA GOLD	1/LC501
	TACTILE WARNING MAT	

JOINTING (JO)

SYMBOL	DESCRIPTION	DETAIL
JO-01	EXPANSION JOINT	
JO-02	CONTROL JOINT	

STAIRS AND RAMPS (SR)

SYMBOL	DESCRIPTION	DETAIL
SR-01	PARALLEL CURB RAMP	

WALLS AND CURBS (WC)

SYMBOL	DESCRIPTION	DETAIL
WC-05	CONCRETE CURB AND GUTTER	

DRAINAGE AND BIO-RETENTION (DR)

SYMBOL	DESCRIPTION	DETAIL
DR-01	BIORETENTION AREA	
DR-03	DRAIN INLET	

PLANTING AND IRRIGATION (PL)

SYMBOL	DESCRIPTION	DETAIL
PL-01	PLANTER AREA SEE LP101-110 AND LI101-110	

UNDERGROUND UTILITIES (UT)

SYMBOL	DESCRIPTION	DETAIL
UT-02	FDC CONNECTION	
UT-04	8" DOUBLE CHECK DETECTOR ASSEMBLY	
UT-05	4" DOMESTIC WATER BACKFLOW PREVENTER	

SITE LIGHTING AND ELECTRICAL (LI)

SYMBOL	DESCRIPTION	DETAIL
LI-01	POLE LIGHT SEE EG101	
LI-03	FUTURE SCE LIGHT POLE CONDUIT AND HANDPULLS TO BE PROVIDED BY CONTRACTOR. CITY TO COORDINATE POLE INSTALL WITH SCE.	
LI-04	S.C.E. UTILITY TRANSFORMER SEE 12/ES102	

SIGNAGE AND STRIPING (SI)

SYMBOL	DESCRIPTION	DETAIL
SI-01	ENTRY MONUMENT SIGNAGE	5/LC503
SI-02	RECYCLED WATER SIGN	7/LC503
SI-04	ROAD AND PARKING LOT STRIPING	
SI-08	UNAUTHORIZED VEHICLE SIGN	

EXISTING TO REMAIN (EX)

SYMBOL	DESCRIPTION	DETAIL
EX-01	FIRE SERVICE, PROTECT IN PLACE SEE CG101	
EX-03	2" IRRIGATION METER, PROTECT IN PLACE SEE LI101	
EX-04	FIRE HYDRANT, PROTECT IN PLACE SEE CG101	
EX-06	TREE, VARIOUS SIZES, PROTECT IN PLACE	
EX-07	TRAIL, PROTECT IN PLACE	
EX-08	BIKE PATH SIGN, PROTECT IN PLACE	

MISCELLANEOUS (MI)

SYMBOL	DESCRIPTION	DETAIL
MI-01	LANDSCAPE BOULDER	3/LC503

KEYMAP

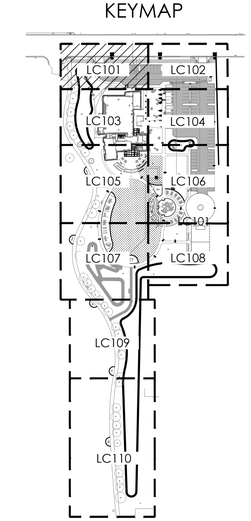

*HATCHED AREA REPRESENTS CURRENT SHEET

1"=200'

0 5 10 20 30 feet

1"=10'

rrm design group
rrmdesign.com | (805) 543-1794
3765 SOUTH HIGUERA STREET, SUITE 102
SAN LUIS OBISPO, CA 93401

THE INCLUDED DRAWINGS, SPECIFICATIONS, IDEAS, DESIGNS AND ARRANGEMENTS REPRESENTED THEREBY ARE AND SHALL REMAIN THE PROPERTY OF RRM DESIGN GROUP. THEY ARE NOT TO BE USED IN WHOLE OR IN PART FOR ANY PURPOSE OTHER THAN THE GREGIN CORNING PLAN WITH ANY WORK OR PROJECT DESIGNED BY RRM DESIGN GROUP FOR WHICH THEY HAVE BEEN PREPARED AND DEVELOPED WITHOUT THE WRITTEN CONSENT OF RRM DESIGN GROUP. VISUAL CONTACT WITH THESE DRAWINGS OR PROJECT SITE SHALL NOT CONSTITUTE USE OF THESE PLANS. ANY LEGAL RIGHTS OR RESTRICTIONS, SUBMITTAL OF THESE DOCUMENTS FOR PUBLIC AGENCY REVIEW SHALL NOT BE CONSIDERED A WAIVER OF RRM DESIGN GROUP'S RIGHTS.
RRM DESIGN GROUP COPYRIGHT 2024.
RRM IS A CALIFORNIA CORPORATION

LICENSED LANDSCAPE ARCHITECT
LANCE WIERSCHEM LIC. 4210
SIGNATURE
07.31.2026
EXPIRATION DATE
DATE
STATE OF CALIFORNIA

CONSULTANT

AGENCY

FOURTH ST COMMUNITY CENTER AND PARK

HENDERSON AVE., PORTERVILLE, CA 93257

CONSTRUCTION PLAN

NO.	REVISION	DATE
1	PLAN CHECK REVISION 1	5/17/24

PLAN CHECK REVISION 2

PROJECT MANAGER: LW
DRAWN BY: DK
CHECKED BY: LW
DATE: 2024.09.19
PROJECT NUMBER: 2883-01-RC22
SHEET: LC101

N:\2800\2883-01-RC22-Porterville-Fourth-St-Park-Design\Landscape-Architecture\Task-L2-ConDocs\Sheet-Files\LC-2883-01.dwg, LC101, Sep 24, 2024 11:29am, LDWierschem

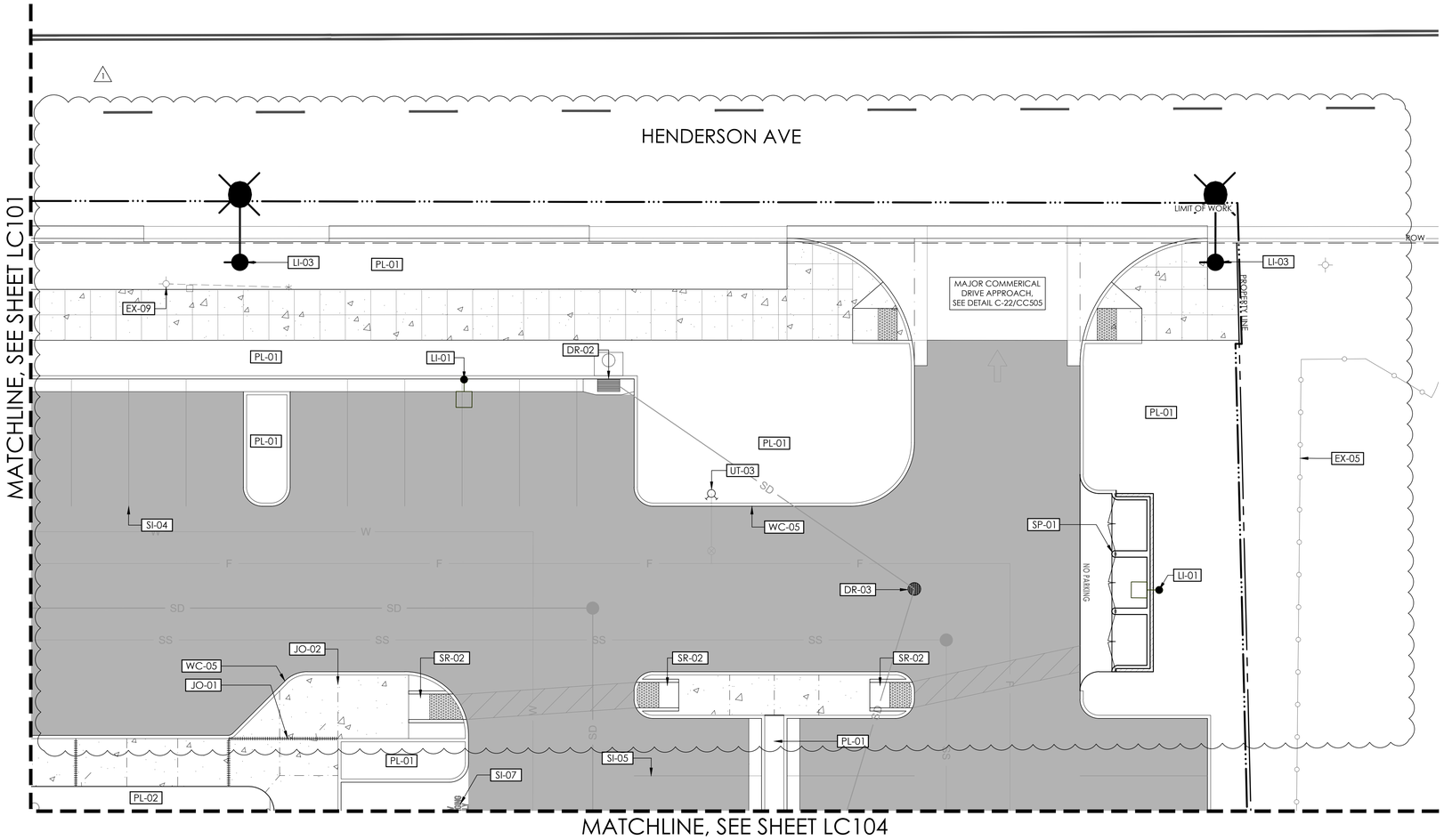

CONSTRUCTION SCHEDULE - LC102

PAVING AND SURFACING (PA)

CODE	DESCRIPTION	DETAIL
PA-01	SIDEWALK CONSTRUCTION	
PA-02	ASHPALT CONCRETE PAVING	
PA-07	STABILIZED DECOMPOSED GRANITE COLOR: CALIFORNIA GOLD	1/LC501
PA-08	TACTILE WARNING MAT	

JOINTING (JO)

CODE	DESCRIPTION	DETAIL
JO-01	EXPANSION JOINT	
JO-02	CONTROL JOINT	

STAIRS AND RAMPS (SR)

CODE	DESCRIPTION	DETAIL
SR-02	ACCESSIBILITY RAMP	

WALLS AND CURBS (WC)

CODE	DESCRIPTION	DETAIL
WC-05	CONCRETE CURB AND GUTTER	

DRAINAGE AND BIO-RETENTION (DR)

CODE	DESCRIPTION	DETAIL
DR-02	CATCH BASIN	
DR-03	DRAIN INLET	

PLANTING AND IRRIGATION (PL)

CODE	DESCRIPTION	DETAIL
PL-01	PLANTER AREA SEE LP101-110 AND LI101-110	
PL-02	TURF AREA SEE LP101-110 AND LI101-110	

UNDERGROUND UTILITIES (UT)

CODE	DESCRIPTION	DETAIL
UT-03	FIRE HYDRANT	

SITE LIGHTING AND ELECTRICAL (LI)

CODE	DESCRIPTION	DETAIL
LI-01	POLE LIGHT SEE EG101	
LI-03	FUTURE SCE LIGHT POLE CONDUIT AND HANDPULLS TO BE PROVIDED BY CONTRACTOR. CITY TO COORDINATE POLE INSTALL WITH SCE.	

SIGNAGE AND STRIPING (SI)

CODE	DESCRIPTION	DETAIL
SI-04	PARKING SPACE STRIPING SEE CH101-CH103	
SI-05	ACCESSIBLE PARKING SPACE STRIPING SEE CH101-CH103	
SI-07	EV PARKING SPACE MARKING	

SPECIALTY (SP)

CODE	DESCRIPTION	DETAIL
SP-01	TRASH ENCLOSURE	

EXISTING TO REMAIN

CODE	DESCRIPTION	DETAIL
EX-05	FENCING, PROTECT IN PLACE	
EX-09	UTILITY POLE AND LINES, PROTECT IN PLACE	

KEYMAP

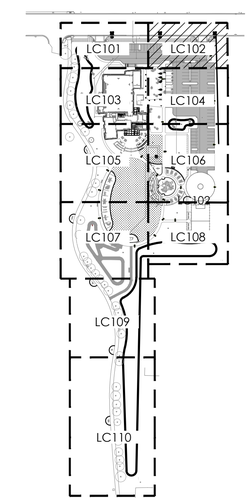

*HATCHED AREA REPRESENTS CURRENT SHEET

1"=200'

0 5 10 20 30 feet

1"=10'

rrm design group
rrmdesign.com | (805) 543-1794
3765 SOUTH HIGUERA STREET, SUITE 102
SAN LUIS OBISPO, CA 93401

THE INCLUDED DRAWINGS, SPECIFICATIONS, IDEAS, DESIGNS AND ARRANGEMENTS REPRESENTED THEREBY ARE AND SHALL REMAIN THE PROPERTY OF RRM DESIGN GROUP AND MAY NOT BE USED WITHOUT THE PERMISSION OF RRM DESIGN GROUP. RRM DESIGN GROUP CANNOT PLAN NOR WILL WORK BE DONE TO DEVELOPED DESIGNS TO OTHERS ON PROJECT FOR WHICH THEY HAVE BEEN PREPARED AND DEVELOPED WITHOUT THE WRITTEN CONSENT OF RRM DESIGN GROUP. VISUAL CONTACT WITH THESE DRAWINGS OR SPECIFICATIONS SHALL CONSTITUTE PROOF OF ACCEPTANCE OF THE ABOVE RESTRICTIONS. SUBMITTAL OF THESE DOCUMENTS FOR PUBLIC AGENCY REVIEW SHALL NOT BE CONSIDERED A WAIVER OF RRM DESIGN GROUP'S RIGHTS.
RRM DESIGN GROUP COPYRIGHT 2024.
RRM IS A CALIFORNIA CORPORATION

LICENSED LANDSCAPE ARCHITECT
LANCE WIERSCHEM LIC. NO. 4210
SIGNATURE
07.31.2026
EXPIRATION DATE
DATE
STATE OF CALIFORNIA

CONSULTANT

AGENCY

FOURTH ST COMMUNITY CENTER AND PARK

HENDERSON AVE., PORTERVILLE, CA 93257

CONSTRUCTION PLAN

NO.	REVISION	DATE
1	PLAN CHECK REVISION 1	5/17/24

PROJECT MANAGER: LW
DRAWN BY: DK
CHECKED BY: LW
DATE: 2024.09.19
PROJECT NUMBER: 2883-01-RC22
SHEET: LC102

PLAN CHECK REVISION 2

N:\2800\2883-01-RC22-Portenville-Fourth-St-Park-Design\Landscape-Architecture\Task-L2-ConDocs\Sheet-Files\LC-2883-01.dwg, LC102, Sep 24, 2024 11:59am, LDWierschem

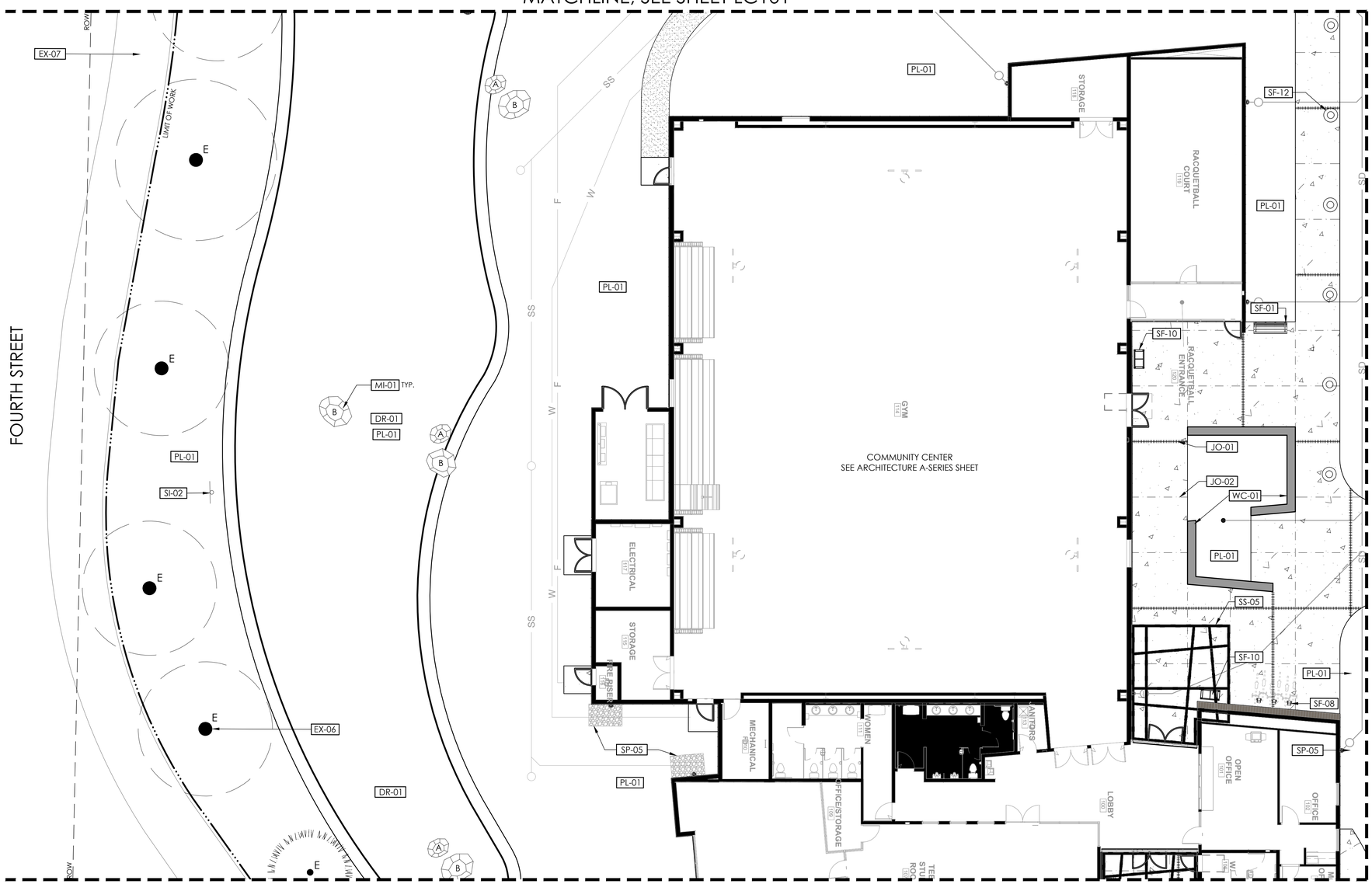

CONSTRUCTION SCHEDULE - LC103

PAVING AND SURFACING (PA)		
SYMBOL	DESCRIPTION	DETAIL
	SIDEWALK CONSTRUCTION	
	STABILIZED DECOMPOSED GRANITE COLOR: CALIFORNIA GOLD	1/LC501

JOINTING (JO)		
SYMBOL	DESCRIPTION	DETAIL
JO-01	EXPANSION JOINT	
JO-02	CONTROL JOINT	

WALLS AND CURBS (WC)		
SYMBOL	DESCRIPTION	DETAIL
WC-01	CONCRETE SEAT WALL	1/LC502

SITE FURNISHINGS (SF)		
SYMBOL	DESCRIPTION	DETAIL
SF-01	BENCH TYPE 1: BACKED BENCH	
SF-08	BIKE RACK	
SF-10	WASTE & RECYCLING RECEPTACLE	
SF-12	BOLLARD LIGHTING	

DRAINAGE AND BIO-RETENTION (DR)		
SYMBOL	DESCRIPTION	DETAIL
DR-01	BIORETENTION AREA	
DR-04	ENERGY DISSIPATION DEVICE	

PLANTING AND IRRIGATION (PL)		
SYMBOL	DESCRIPTION	DETAIL
PL-01	PLANTER AREA SEE LP101-110 AND LI101-110	

SIGNAGE AND STRIPING (SI)		
SYMBOL	DESCRIPTION	DETAIL
SI-02	RECYCLED WATER SIGN	7/LC503

EXISTING TO REMAIN (EX)		
SYMBOL	DESCRIPTION	DETAIL
EX-06	TREE, VARIOUS SIZES, PROTECT IN PLACE	
EX-07	TRAIL, PROTECT IN PLACE	

MISCELLANEOUS (MI)		
SYMBOL	DESCRIPTION	DETAIL
MI-01	LANDSCAPE BOULDER	3/LC503

KEYMAP

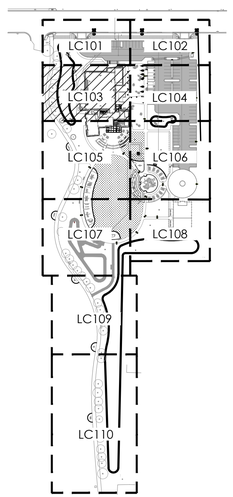

*HATCHED AREA REPRESENTS CURRENT SHEET

1"=200'

0 5 10 20 30 feet

1"=10'

rrm design group
rrmdesign.com | (805) 543-1794
3765 SOUTH HIGUERA STREET, SUITE 102
SAN LUIS OBISPO, CA 93401

THE INCLUDED DRAWINGS, SPECIFICATIONS, IDEAS, DESIGNS AND ARRANGEMENTS REPRESENTED THEREBY ARE AND SHALL REMAIN THE PROPERTY OF RRM DESIGN GROUP. THEY ARE NOT TO BE USED IN WHOLE OR IN PART FOR ANY PURPOSE NOT AGREED IN CONNECTION WITH ANY WORK OR PROJECT DESIGNED BY RRM THE SPECIFIED PROJECT FOR WHICH THEY HAVE BEEN PREPARED AND DEVELOPED WITHOUT THE WRITTEN CONSENT OF RRM DESIGN GROUP. VISUAL CONTACT WITH THESE DRAWINGS OR SPECIFICATIONS SHALL CONSTITUTE PROOF OF ACCEPTANCE OF THE ABOVE RESTRICTIONS. SUBMITTAL OF THESE DOCUMENTS FOR PUBLIC AGENCY REVIEW SHALL NOT BE CONSIDERED A WAIVER OF RRM DESIGN GROUP'S RIGHTS.
RRM DESIGN GROUP COPYRIGHT 2024.
RRM IS A CALIFORNIA CORPORATION

LICENSED LANDSCAPE ARCHITECT
LANCE WIERSCHEM LIC. 4610
SIGNATURE
07.31.2026
EXPIRATION DATE
STATE OF CALIFORNIA

CONSULTANT

AGENCY

FOURTH ST COMMUNITY CENTER AND PARK

HENDERSON AVE., PORTERVILLE, CA 93257

CONSTRUCTION PLAN

NO.	REVISION	DATE

PLAN CHECK REVISION 2

PROJECT MANAGER: LW
DRAWN BY: DK
CHECKED BY: LW
DATE: 2024.09.19
PROJECT NUMBER: 2883-01-RC22
SHEET: LC103

N:\2800\2883-01-RC22-Porterville-Fourth-St-Park-Design\Landscape-Architecture\Task-L2-ConDocs\Sheet-Files\LC-2883-01.dwg, LC103, Sep 24, 2024 12:23pm, LDWierschem

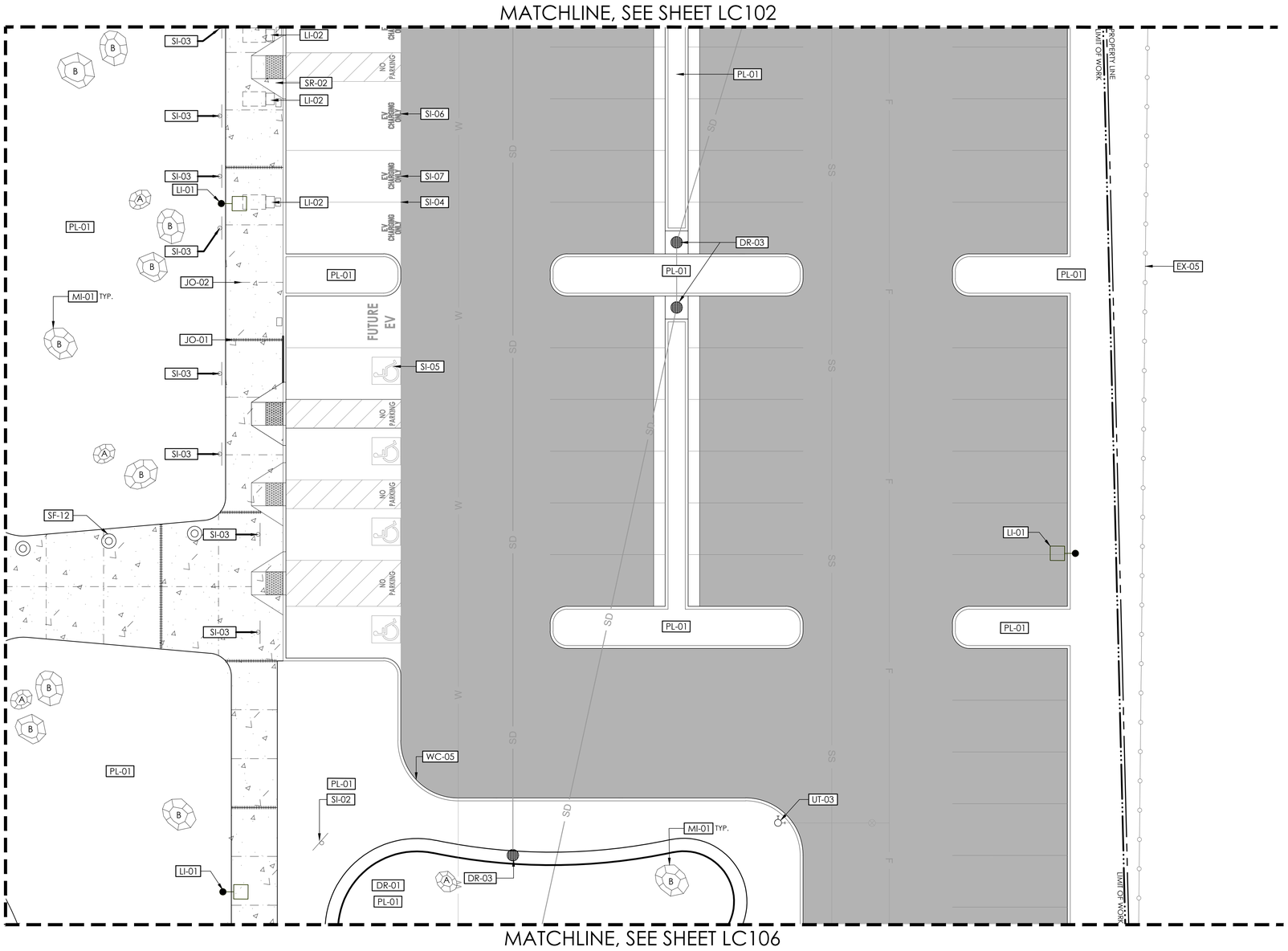

CONSTRUCTION SCHEDULE - LC104

PAVING AND SURFACING (PA)

CODE	DESCRIPTION	DETAIL
	SIDEWALK CONSTRUCTION	
	ASHPALT CONCRETE PAVING	
	TACTILE WARNING MAT	

JOINTING (JO)

CODE	DESCRIPTION	DETAIL
JO-01	EXPANSION JOINT	
JO-02	CONTROL JOINT	

STAIRS AND RAMPS (SR)

CODE	DESCRIPTION	DETAIL
SR-02	ACCESSIBILITY RAMP	

WALLS AND CURBS (WC) AREA 4

CODE	DESCRIPTION	DETAIL
WC-05	CONCRETE CURB AND GUTTER	

DRAINAGE AND BIO-RETENTION (DR)

CODE	DESCRIPTION	DETAIL
DR-01	BIORETENTION AREA	
DR-03	DRAIN INLET	

PLANTING AND IRRIGATION (PL)

CODE	DESCRIPTION	DETAIL
PL-01	PLANTER AREA SEE LP101-110 AND LI101-110	

SITE LIGHTING AND ELECTRICAL (LI)

CODE	DESCRIPTION	DETAIL
LI-01	POLE LIGHT SEE EG101	
LI-02	EV CHARGING STATION SEE SHEET ES102	

SIGNAGE AND STRIPING (SI)

CODE	DESCRIPTION	DETAIL
SI-02	RECYCLED WATER SIGN	7/LC503
SI-03	SIGNAGE SEE CH101-CH103	
SI-04	PARKING SPACE STRIPING SEE CH101-CH103	
SI-05	ACCESSIBLE PARKING SPACE STRIPING SEE CH101-CH103	
SI-06	ACCESSIBLE EV PARKING SPACE STRIPING	
SI-07	EV PARKING SPACE MARKING	

EXISTING TO REMAIN

CODE	DESCRIPTION	DETAIL
EX-05	FENCING, PROTECT IN PLACE	

MISCELLANEOUS (MI)

CODE	DESCRIPTION	DETAIL
MI-01	LANDSCAPE BOULDER	3/LC503

KEYMAP

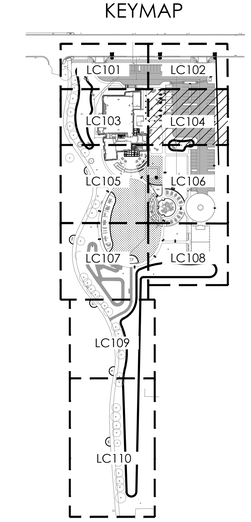

*HATCHED AREA REPRESENTS CURRENT SHEET

1"=200'

0 5 10 20 30 feet

1"=10'

rrm design group
rrmdesign.com | (805) 543-1794
3765 SOUTH HIGUERA STREET, SUITE102
SAN LUIS OBISPO, CA 93401

THE INCLUDED DRAWINGS, SPECIFICATIONS, IDEAS, DESIGNS AND ARRANGEMENTS REPRESENTED THEREBY ARE AND SHALL REMAIN THE PROPERTY OF RRM DESIGN GROUP. THEY ARE NOT TO BE USED IN WHOLE OR IN PART FOR ANY PURPOSE OTHER THAN THE GREEN CONNECTION WITH ANY WORK OR PROJECT DESIGNED BY RRM DESIGN GROUP FOR PROJECT FOR WHICH THEY HAVE BEEN PREPARED AND DEVELOPED WITHOUT THE WRITTEN CONSENT OF RRM DESIGN GROUP. VISUAL CONTACT WITH THESE DRAWINGS OR SPECIFICATIONS SHALL CONSTITUTE PROOF OF ACCEPTANCE OF THESE RESTRICTIONS. SUBMITTAL OF THESE DOCUMENTS FOR PUBLIC AGENCY REVIEW SHALL NOT BE CONSIDERED A WAIVER OF RRM DESIGN GROUP'S RIGHTS.
RRM DESIGN GROUP COPYRIGHT 2024.
RRM IS A CALIFORNIA CORPORATION

LICENSED LANDSCAPE ARCHITECT
LANCE WIERSCHEM LIC. 4210
SIGNATURE
07.31.2026
EXPIRATION DATE
STATE OF CALIFORNIA

CONSULTANT

AGENCY

FOURTH ST COMMUNITY CENTER AND PARK

HENDERSON AVE., PORTERVILLE, CA 93257

CONSTRUCTION PLAN

NO.	REVISION	DATE

PROJECT MANAGER: LW
DRAWN BY: DK
CHECKED BY: LW
DATE: 2024.09.19
PROJECT NUMBER: 2883-01-RC22
SHEET: LC104

PLAN CHECK REVISION 2

N:\2800\2883-01-RC22-Porterville-Fourth-St-Park-Design\Landscape-Architecture\Task-L2-ConDocs\Sheet-Files\LC-2883-01.dwg, LC104, Sep 24, 2024 12:53pm, LDWierschem

MATCHLINE, SEE SHEET LC103

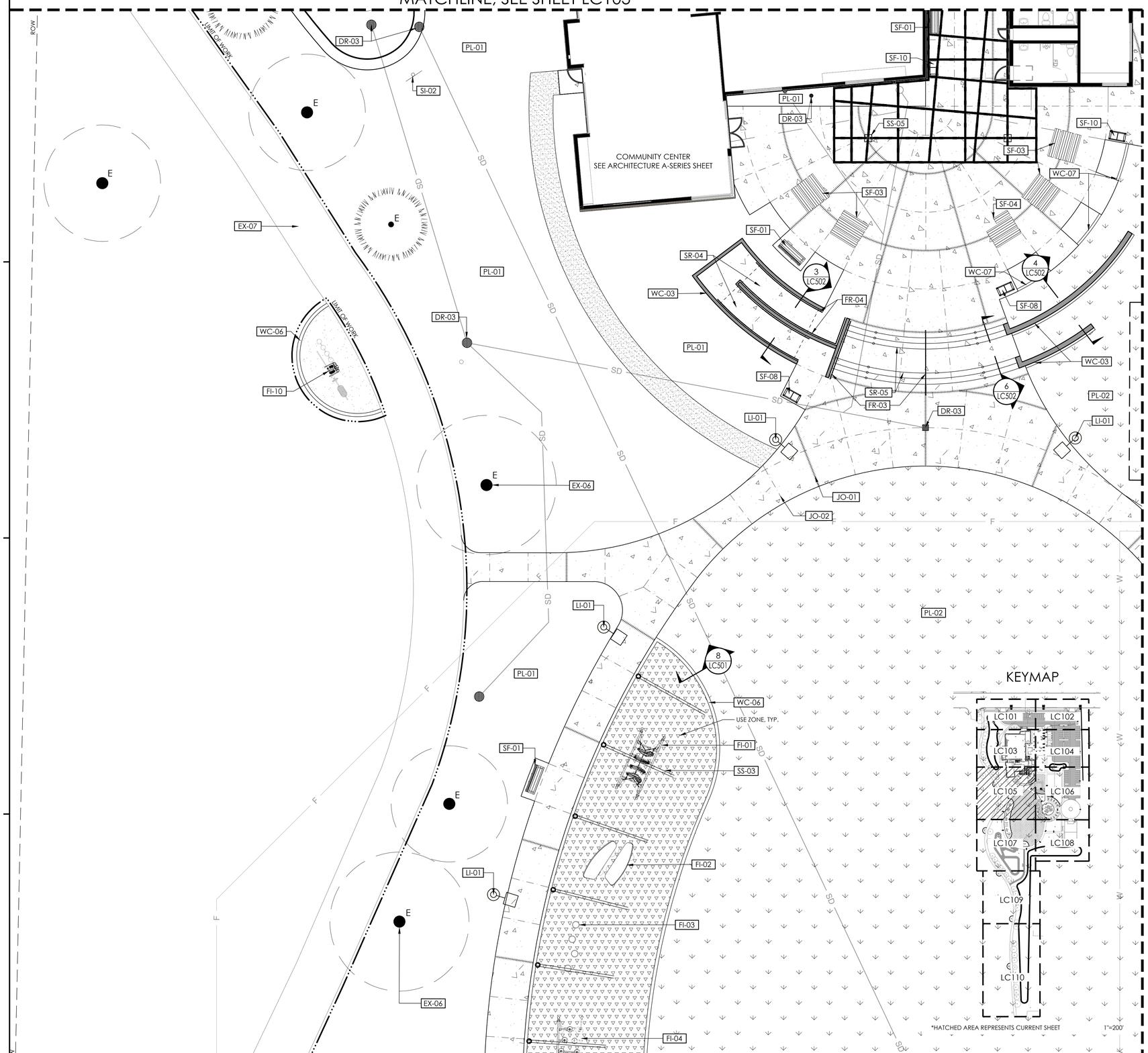

MATCHLINE, SEE SHEET LC106

MATCHLINE, SEE SHEET LC107

0 5 10 20 30 feet
1"=10'

CONSTRUCTION SCHEDULE - LC105

PAVING AND SURFACING (PA)

SYMBOL	DESCRIPTION	DETAIL
	SIDEWALK CONSTRUCTION	
	ENGINEERED WOOD FIBER	2/LC501
PA-06	SYNTHETIC TURF	3/LC501
	STABILIZED DECOMPOSED GRANITE COLOR: CALIFORNIA GOLD	1/LC501

JOINTING (JO)

SYMBOL	DESCRIPTION	DETAIL
JO-01	EXPANSION JOINT	
JO-02	CONTROL JOINT	

STAIRS AND RAMPS (SR)

SYMBOL	DESCRIPTION	DETAIL
SR-04	SWITCHBACK RAMP	3/LC502
SR-05	STAIRS	6/LC502

WALLS AND CURBS (WC)

SYMBOL	DESCRIPTION	DETAIL
WC-03	TERRACE WALLS	4/LC502
WC-06	PLAY CURB	6/LC501
WC-07	MOW CURB	9/LC501

SITE FURNISHINGS (SF)

SYMBOL	DESCRIPTION	DETAIL
SF-01	BENCH TYPE 1: BACKED BENCH	
SF-03	6FT RECTANGULAR PICNIC TABLE	6/LC503
SF-04	6FT RECTANGULAR ACCESSIBLE PICNIC TABLE ONE SIDE	6/LC503
SF-08	BIKE RACK	
SF-10	WASTE & RECYCLING RECEPTACLE	

FENCES, RAILINGS, AND GATES (FR)

SYMBOL	DESCRIPTION	DETAIL
FR-03	STAIR HANDRAIL FINISH: GALVINIZED	5/LC502
FR-04	RAMP HANDRAIL FINISH: GALVINIZED	7/LC502

SITE STRUCTURES (SS)

SYMBOL	DESCRIPTION	DETAIL
SS-03	SHADE STRUCTURE AT CHALLENGE COURSE	
SS-05	TRELLIS SEE 09.9000E/A101 AND S-221	

DRAINAGE AND BIO-RETENTION (DR)

SYMBOL	DESCRIPTION	DETAIL
DR-03	DRAIN INLET	

PLANTING AND IRRIGATION (PL)

SYMBOL	DESCRIPTION	DETAIL
PL-01	PLANTER AREA SEE LP101-110 AND LI101-110	
PL-02	TURF AREA SEE LP101-110 AND LI101-110	

SIGNAGE AND STRIPING (SI)

SYMBOL	DESCRIPTION	DETAIL
SI-02	RECYCLED WATER SIGN	7/LC503

FITNESS EQUIPMENT (FI)

SYMBOL	DESCRIPTION	DETAIL
FI-01	CHALLENGE COURSE OBSTACLE 1 FLOATING BOARDS	
FI-02	CHALLENGE COURSE OBSTACLE 2 NINJA STEPS	
FI-03	CHALLENGE COURSE OBSTACLE 3 AGILITY TRAINERS	
FI-04	CHALLENGE COURSE OBSTACLE 4 SWAY STEPS	
FI-10	STEPPER W/ ADJUSTABLE RESISTANCE UBX292	

EXISTING TO REMAIN (EX)

SYMBOL	DESCRIPTION	DETAIL
EX-06	TREE, VARIOUS SIZES, PROTECT IN PLACE	
EX-07	TRAIL, PROTECT IN PLACE	

SITE LIGHTING AND ELECTRICAL (LI)

SYMBOL	DESCRIPTION	DETAIL
LI-01	POLE LIGHT SEE EG101	

rrm design group
rrmdesign.com | (805) 543-1794
3765 SOUTH HIGUERA STREET, SUITE 102
SAN LUIS OBISPO, CA 93401

THE INCLUDED DRAWINGS, SPECIFICATIONS, IDEAS, DESIGNS AND ARRANGEMENTS REPRESENTED THEREBY ARE AND SHALL REMAIN THE PROPERTY OF RRM DESIGN GROUP. THEY WERE NOT PREPARED FOR USE ON OTHER PROJECTS AND MAY NOT BE USED IN CONNECTION WITH ANY WORK OR PROJECT OTHER THAN THE PROJECT FOR WHICH THEY HAVE BEEN PREPARED AND DEVELOPED WITHOUT THE WRITTEN CONSENT OF RRM DESIGN GROUP. VISUAL CONTACT WITH THESE DRAWINGS AND SPECIFICATIONS SHALL CONSTITUTE PROOF OF ACCEPTANCE OF THE ABOVE RESTRICTIONS. SUBMITTAL OF THESE DOCUMENTS FOR PUBLIC AGENCY REVIEW SHALL NOT BE CONSIDERED A WAIVER OF RRM DESIGN GROUP'S RIGHTS.
RRM DESIGN GROUP COPYRIGHT 2024.
RRM IS A CALIFORNIA CORPORATION

LICENSED LANDSCAPE ARCHITECT
LANCE WIERSCHEM LIC. 4210
SIGNATURE
07.31.2026
EXPIRATION DATE
DATE
STATE OF CALIFORNIA

CONSULTANT

AGENCY

FOURTH ST COMMUNITY CENTER AND PARK

HENDERSON AVE., PORTERVILLE, CA 93257

CONSTRUCTION PLAN

NO.	REVISION	DATE

PROJECT MANAGER: LW
DRAWN BY: DK
CHECKED BY: LW
DATE: 2024.09.19
PROJECT NUMBER: 2883-01-RC22
SHEET: LC105

PLAN CHECK REVISION 2

N:\2800\2883-01-RC22-Porterville-Fourth-St-Park-Design\Landscape-Architecture\Task-L2-ConDocs\Sheet-Files\LC-2883-01.dwg, LC105, Sep 24, 2024 1:10pm, LDWierschem

MATCHLINE, SEE SHEET LC104

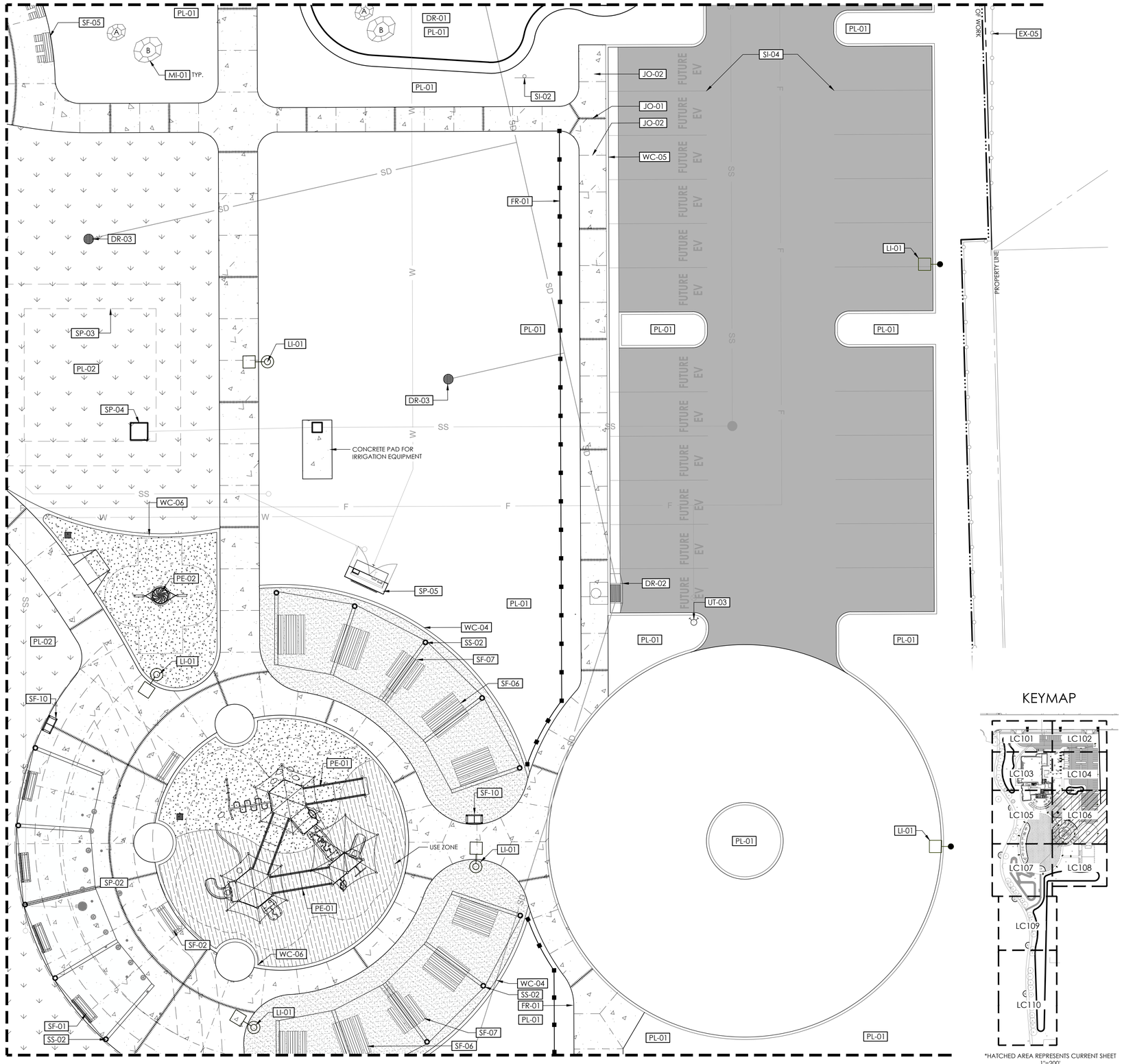

MATCHLINE, SEE SHEET LC105

MATCHLINE, SEE SHEET LC108

KEYMAP

*HATCHED AREA REPRESENTS CURRENT SHEET
1"=200'

0 5 10 20 30 feet
1"=10'

CONSTRUCTION SCHEDULE - LC106

PAVING AND SURFACING (PA)

SYMBOL	DESCRIPTION	DETAIL
	SIDEWALK CONSTRUCTION	
	ASHPALT CONCRETE PAVING	
	ENGINEERED WOOD FIBER	2/LC501
	POURED-IN-PLACE RUBBER SURFACING COLORS: SEE SPECS	4/LC501
	STABILIZED DECOMPOSED GRANITE COLOR: CALIFORNIA GOLD	1/LC501

JOINTING (JO)

SYMBOL	DESCRIPTION	DETAIL
JO-01	EXPANSION JOINT	
JO-02	CONTROL JOINT	

WALLS AND CURBS (WC)

SYMBOL	DESCRIPTION	DETAIL
WC-04	FLUSH CURB AT DECOMPOSED GRANITE	5/LC501
WC-05	CONCRETE CURB AND GUTTER	
WC-06	PLAY CURB	6/LC501

SITE FURNISHINGS (SF)

SYMBOL	DESCRIPTION	DETAIL
SF-01	BENCH TYPE 1: BACKED BENCH	
SF-02	BENCH TYPE 2: BACKLESS BENCH	
SF-05	6FT TABLE BENCH COMBO	
SF-06	8FT RECTANGULAR PICNIC TABLE	
SF-07	8FT RECTANGULAR ACCESSIBLE PICNIC TABLE	
SF-10	WASTE & RECYCLING RECEPTACLE	

FENCES, RAILINGS, AND GATES (FR)

SYMBOL	DESCRIPTION	DETAIL
FR-01	WOOD RAIL FENCE	2/LC503

SITE STRUCTURES (SS)

SYMBOL	DESCRIPTION	DETAIL
SS-02	CANTILEVERED SHADE STRUCTURE AT PICNIC & SPLASHPAD	

DRAINAGE AND BIO-RETENTION (DR)

SYMBOL	DESCRIPTION	DETAIL
DR-01	BIORETENTION AREA	
DR-02	CATCH BASIN	
DR-03	DRAIN INLET	

PLANTING AND IRRIGATION (PL)

SYMBOL	DESCRIPTION	DETAIL
PL-01	PLANTER AREA SEE LP101-110 AND LI101-110	
PL-02	TURF AREA SEE LP101-110 AND LI101-110	

UNDERGROUND UTILITIES (UT)

SYMBOL	DESCRIPTION	DETAIL
UT-03	FIRE HYDRANT	

SIGNAGE AND STRIPING (SI)

SYMBOL	DESCRIPTION	DETAIL
SI-02	RECYCLED WATER SIGN	7/LC503
SI-04	ROAD AND PARKING LOT STRIPING	

PLAY EQUIPMENT (PE)

SYMBOL	DESCRIPTION	DETAIL
PE-01	ACCESSIBLE PLAY STRUCTURE COLOR THEME: JURASSIC "CUSTOMIZED"	
PE-02	SAUCER SWING	

SPECIALTY (SP) AREA 6

CODE	DESCRIPTION	DETAIL
SP-02	SPLASH PAD SEE SPLASHPAD DRAWINGS FOR DETAILS	
SP-03	SPLASHPAD SUBSURFACE RESERVOIR SEE SPLASHPAD AND IRRIGATION DRAWINGS FOR DETAILS	
SP-04	FLUSH ACCESSIBLE LOCKABLE DOOR SEE SPLASHPAD DRAWINGS FOR DETAILS	
SP-05	SPLASH PAD MANIFOLD CABINET	

EXISTING TO REMAIN (EX)

SYMBOL	DESCRIPTION	DETAIL
EX-05	FENCING, PROTECT IN PLACE	

MISCELLANEOUS (MI)

SYMBOL	DESCRIPTION	DETAIL
MI-01	LANDSCAPE BOULDER	3/LC503

SITE LIGHTING AND ELECTRICAL (LI)

SYMBOL	DESCRIPTION	DETAIL
LI-01	POLE LIGHT SEE EG101	

rrm design group
rrmdesign.com | (805) 543-1794
3765 SOUTH HIGUERA STREET, SUITE 102
SAN LUIS OBISPO, CA 93401

THE INCLUDED DRAWINGS, SPECIFICATIONS, IDEAS, DESIGNS AND ARRANGEMENTS REPRESENTED THEREBY ARE AND SHALL REMAIN THE PROPERTY OF RRM DESIGN GROUP. THEY ARE NOT TO BE USED IN WHOLE OR IN PART FOR ANY PURPOSE BY ANY PERSON OR ENTITY OTHER THAN THE PROJECT FOR WHICH THEY WERE PREPARED AND DELIVERED. DISCLOSURE OF THE CONTENTS OF THESE DRAWINGS, SPECIFICATIONS, IDEAS, DESIGNS AND ARRANGEMENTS DOES NOT CONSTITUTE A GRANT OF ANY RIGHTS FOR ANY PURPOSE OTHER THAN THE PROJECT FOR WHICH THEY HAVE BEEN PREPARED AND DEVELOPED. WITHOUT THE WRITTEN CONSENT OF RRM DESIGN GROUP, VISUAL CONTACT WITH THESE DRAWINGS AND SPECIFICATIONS SHALL CONSTITUTE PROOF OF ACCEPTANCE OF THE ABOVE RESTRICTIONS. SUBMITTAL OF THESE DOCUMENTS FOR PUBLIC AGENCY REVIEW SHALL NOT BE CONSIDERED A WAIVER OF RRM DESIGN GROUP'S RIGHTS.
RRM DESIGN GROUP COPYRIGHT 2024.
RRM IS A CALIFORNIA CORPORATION

LICENSED LANDSCAPE ARCHITECT
LANCE WIERSCHEM LIC. 4210
07.31.2026
EXPIRATION DATE
STATE OF CALIFORNIA

CONSULTANT

AGENCY

FOURTH ST COMMUNITY CENTER AND PARK
HENDERSON AVE., PORTERVILLE, CA 93257

CONSTRUCTION PLAN

NO.	REVISION	DATE

PROJECT MANAGER LW
DRAWN BY DK
CHECKED BY LW
DATE 2024.09.19
PROJECT NUMBER 2883-01-RC22
SHEET LC106

PLAN CHECK REVISION 2

N:\2800\2883-01-RC22-Porterville-Fourth-St-Park-Design\Landscape-Architecture\Task-L2-ConDocs\Sheet-Files\LC-2883-01.dwg, LC106, Sep 24, 2024, 1:27pm, LDWierschem

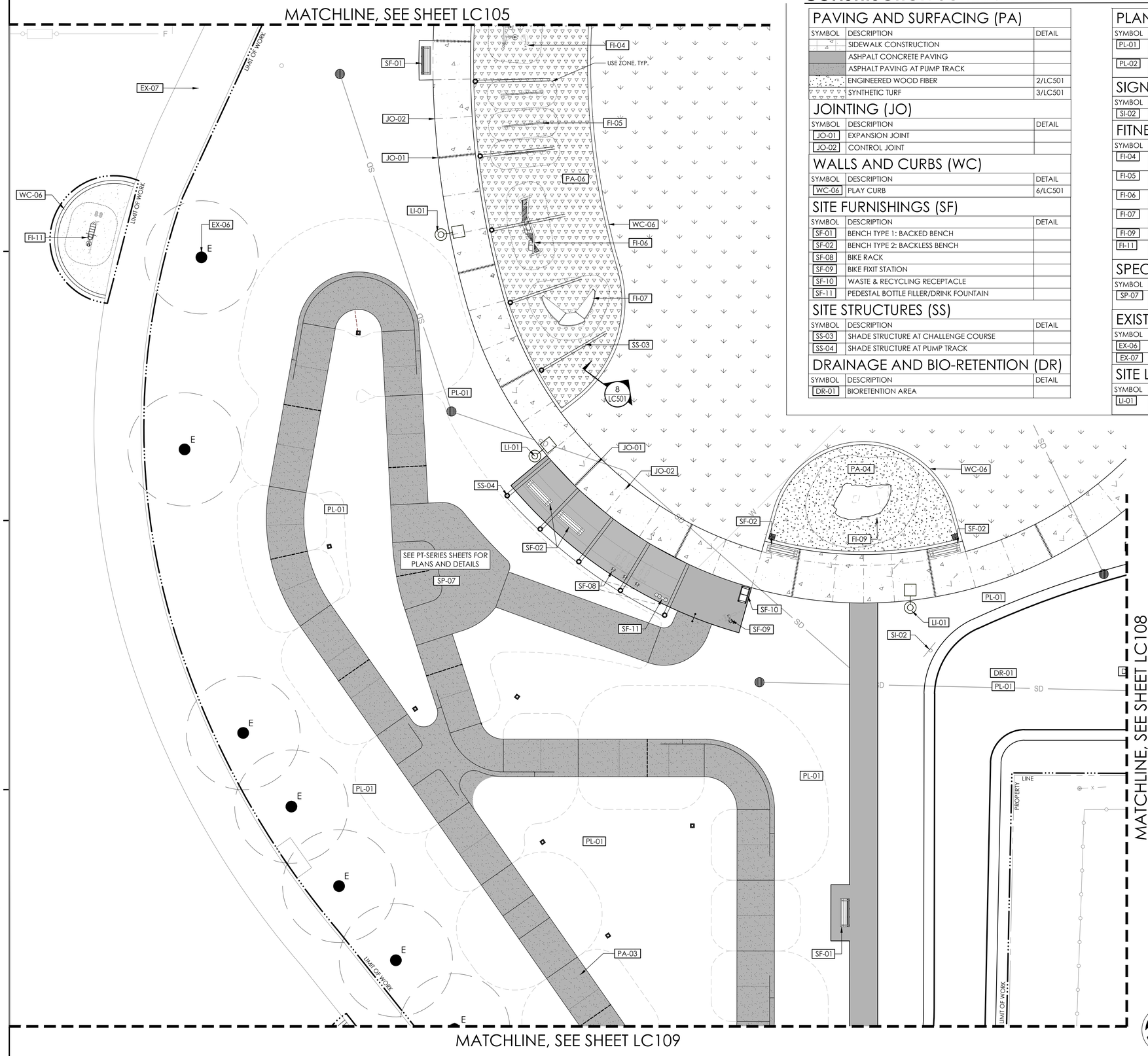

CONSTRUCTION SCHEDULE - LC107

PAVING AND SURFACING (PA)

SYMBOL	DESCRIPTION	DETAIL
	SIDEWALK CONSTRUCTION	
	ASHPALT CONCRETE PAVING	
	ASPHALT PAVING AT PUMP TRACK	
	ENGINEERED WOOD FIBER	2/LC501
	SYNTHETIC TURF	3/LC501

JOINTING (JO)

SYMBOL	DESCRIPTION	DETAIL
JO-01	EXPANSION JOINT	
JO-02	CONTROL JOINT	

WALLS AND CURBS (WC)

SYMBOL	DESCRIPTION	DETAIL
WC-06	PLAY CURB	6/LC501

SITE FURNISHINGS (SF)

SYMBOL	DESCRIPTION	DETAIL
SF-01	BENCH TYPE 1: BACKED BENCH	
SF-02	BENCH TYPE 2: BACKLESS BENCH	
SF-08	BIKE RACK	
SF-09	BIKE FIXIT STATION	
SF-10	WASTE & RECYCLING RECEPTACLE	
SF-11	PEDESTAL BOTTLE FILLER/DRINK FOUNTAIN	

SITE STRUCTURES (SS)

SYMBOL	DESCRIPTION	DETAIL
SS-03	SHADE STRUCTURE AT CHALLENGE COURSE	
SS-04	SHADE STRUCTURE AT PUMP TRACK	

DRAINAGE AND BIO-RETENTION (DR)

SYMBOL	DESCRIPTION	DETAIL
DR-01	BIORETENTION AREA	

PLANTING AND IRRIGATION (PL)

SYMBOL	DESCRIPTION	DETAIL
PL-01	PLANTER AREA SEE LP101-110 AND LI101-110	
PL-02	TURF AREA SEE LP101-110 AND LI101-110	

SIGNAGE AND STRIPING (SI)

SYMBOL	DESCRIPTION	DETAIL
SI-02	RECYCLED WATER SIGN	7/LC503

FITNESS EQUIPMENT (FI)

SYMBOL	DESCRIPTION	DETAIL
FI-04	CHALLENGE COURSE OBSTACLE 4 SWAY STEPS	
FI-05	CHALLENGE COURSE OBSTACLE 5 VAULT WALL	
FI-06	CHALLENGE COURSE OBSTACLE 6 TRAVERSE WALL	
FI-07	CHALLENGE COURSE OBSTACLE 7 U-TURN RAMP	
FI-09	PAGOSA CLIMBING BOULDER	
FI-11	BENCH PRESS W/ ADJUSTABLE RESISTANCE UBX293	

SPECIALTY (SP)

SYMBOL	DESCRIPTION	DETAIL
SP-07	BIKE PUMP TRACK SEE PT-SERIES SHEETS FOR DETAILS	

EXISTING TO REMAIN (EX)

SYMBOL	DESCRIPTION	DETAIL
EX-06	TREE, VARIOUS SIZES, PROTECT IN PLACE	
EX-07	TRAIL, PROTECT IN PLACE	

SITE LIGHTING AND ELECTRICAL (LI)

SYMBOL	DESCRIPTION	DETAIL
LI-01	POLE LIGHT SEE EG101	

KEYMAP

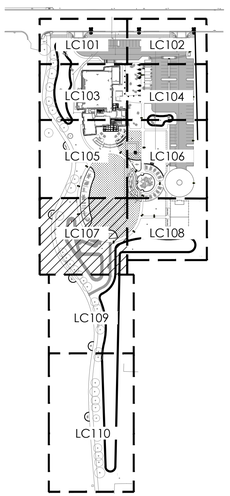

*HATCHED AREA REPRESENTS CURRENT SHEET

1"=200'

0 5 10 20 30 feet

1"=10'

rrm design group
rrmdesign.com | (805) 543-1794
3765 SOUTH HIGUERA STREET, SUITE 102
SAN LUIS OBISPO, CA 93401

THE INCLUDED DRAWINGS, SPECIFICATIONS, IDEAS, DESIGNS AND ARRANGEMENTS REPRESENTED THEREBY ARE AND SHALL REMAIN THE PROPERTY OF RRM DESIGN GROUP. THEY WERE NOT PREPARED FOR USE ON OTHER PROJECTS AND MAY NOT BE USED IN CONNECTION WITH ANY WORK OR PROJECT OTHER THAN THE SPECIFIED PROJECT FOR WHICH THEY HAVE BEEN PREPARED AND DEVELOPED WITHOUT THE WRITTEN CONSENT OF RRM DESIGN GROUP. VISUAL CONTACT WITH THESE DRAWINGS AND SPECIFICATIONS SHALL CONSTITUTE PROOF OF ACCEPTANCE OF THE ABOVE RESTRICTIONS. SUBMITTAL OF THESE DOCUMENTS FOR PUBLIC AGENCY REVIEW SHALL NOT BE CONSIDERED A WAIVER OF RRM DESIGN GROUP'S RIGHTS.
RRM DESIGN GROUP COPYRIGHT 2024.
RRM IS A CALIFORNIA CORPORATION

LICENSED LANDSCAPE ARCHITECT
LANCE WIERSCHEM LIC. 4822
07.31.2026
EXPIRATION DATE
STATE OF CALIFORNIA

CONSULTANT

AGENCY

FOURTH ST COMMUNITY CENTER AND PARK
HENDERSON AVE., PORTERVILLE, CA 93257

CONSTRUCTION PLAN

NO.	REVISION	DATE

PROJECT MANAGER
LW

DRAWN BY DK
CHECKED BY LW

DATE
2024.09.19

PROJECT NUMBER
2883-01-RC22

SHEET
LC107

PLAN CHECK REVISION 2

N:\2800\2883-01-RC22-Porterville-Fourth-St-Park-Design\Landscape-Architecture\Task-L2-ConDocs\Sheet-Files\LC-2883-01.dwg, LC107, Sep 24, 2024 1:51pm, LDWierschem

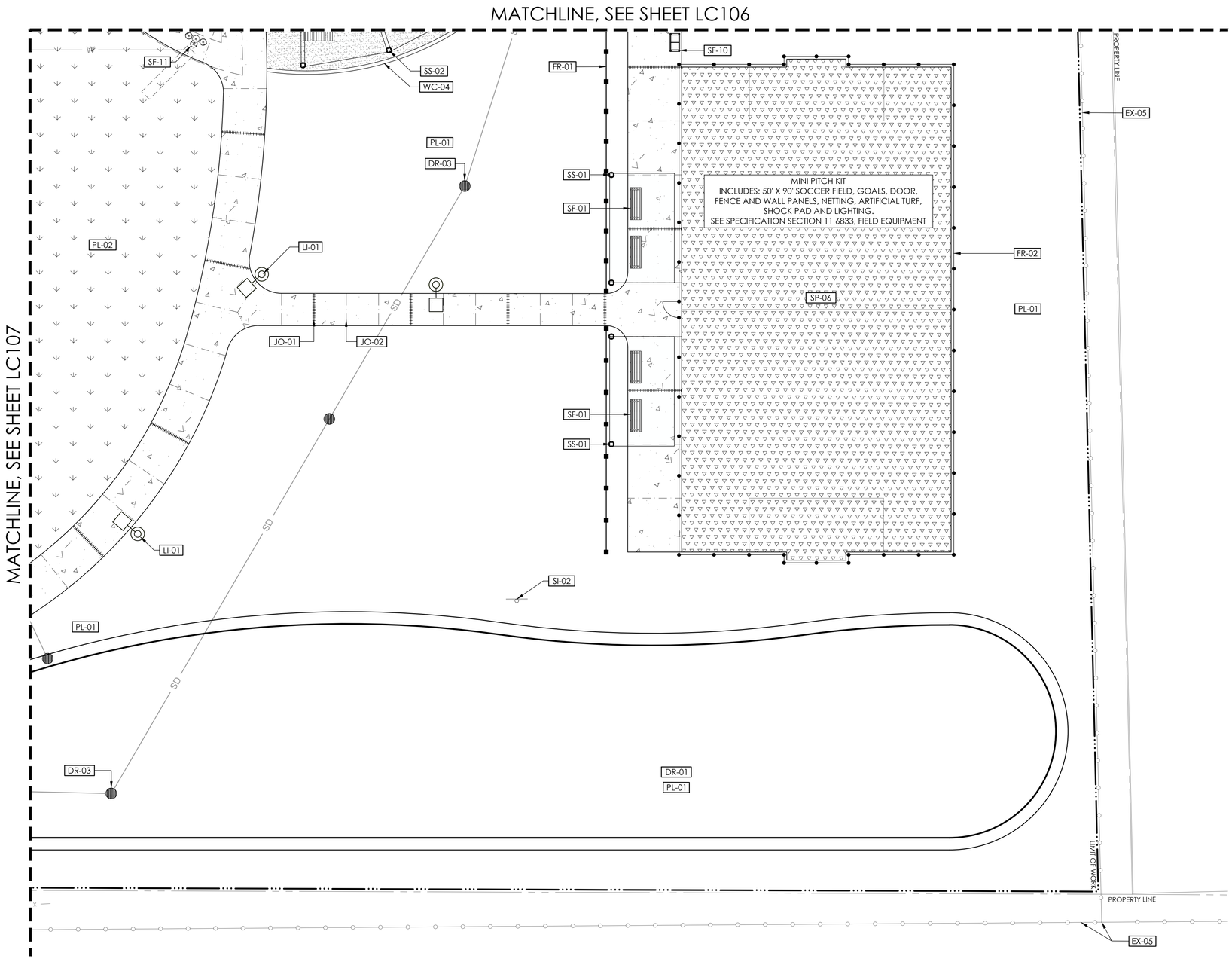

CONSTRUCTION SCHEDULE - AREA 8

PAVING AND SURFACING (PA)

SYMBOL	DESCRIPTION	DETAIL
	SIDEWALK CONSTRUCTION	
	SYNTHETIC TURF	3/LC501
	STABILIZED DECOMPOSED GRANITE COLOR: CALIFORNIA GOLD	1/LC501

JOINTING (JO)

SYMBOL	DESCRIPTION	DETAIL
JO-01	EXPANSION JOINT	
JO-02	CONTROL JOINT	

WALLS AND CURBS (WC)

SYMBOL	DESCRIPTION	DETAIL
WC-04	FLUSH CURB AT DECOMPOSED GRANITE	5/LC501

SITE FURNISHINGS (SF)

SYMBOL	DESCRIPTION	DETAIL
SF-01	BENCH TYPE 1: BACKED BENCH	
SF-10	WASTE & RECYCLING RECEPTACLE	
SF-11	PEDESTAL BOTTLE FILLER/DRINK FOUNTAIN	

FENCES, RAILINGS, AND GATES (FR)

SYMBOL	DESCRIPTION	DETAIL
FR-01	WOOD RAIL FENCE	2/LC503
FR-02	MINI PITCH FENCE	

SITE STRUCTURES (SS)

SYMBOL	DESCRIPTION	DETAIL
SS-01	SHADE STRUCTURE AT MINI PITCH	
SS-02	CANTILEVERED SHADE STRUCTURE AT PICNIC & SPLASHPAD	

DRAINAGE AND BIO-RETENTION (DR)

SYMBOL	DESCRIPTION	DETAIL
DR-01	BIORETENTION AREA	
DR-03	DRAIN INLET	

PLANTING AND IRRIGATION (PL)

SYMBOL	DESCRIPTION	DETAIL
PL-01	PLANTER AREA SEE LP101-110 AND LI101-110	
PL-02	TURF AREA SEE LP101-110 AND LI101-110	

SITE LIGHTING AND ELECTRICAL (LI)

SYMBOL	DESCRIPTION	DETAIL
LI-01	POLE LIGHT SEE EG101	

SPECIALTY (SP)

SYMBOL	DESCRIPTION	DETAIL
SP-06	MINI PITCH KIT	

EXISTING TO REMAIN (EX)

SYMBOL	DESCRIPTION	DETAIL
EX-05	FENCING, PROTECT IN PLACE	

KEYMAP

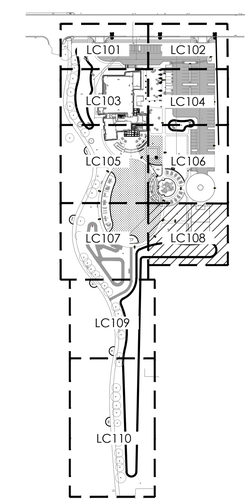

*HATCHED AREA REPRESENTS CURRENT SHEET

1"=200'

0 5 10 20 30 feet

1"=10'

rrm design group
rrmdesign.com | (805) 543-1794
3765 SOUTH HIGUERA STREET, SUITE 102
SAN LUIS OBISPO, CA 93401

THE INCLUDED DRAWINGS, SPECIFICATIONS, IDEAS, DESIGNS AND ARRANGEMENTS REPRESENTED THEREBY ARE AND SHALL REMAIN THE PROPERTY OF RRM DESIGN GROUP. THEY ARE NOT TO BE USED IN WHOLE OR IN PART FOR ANY PURPOSE OTHER THAN THE GIVEN CONNECTION WITH ANY WORK OR PROJECT DESIGNED BY RRM DESIGN GROUP OR OTHERS ON PROJECT FOR WHICH THEY HAVE BEEN PREPARED AND DEVELOPED WITHOUT THE WRITTEN CONSENT OF RRM DESIGN GROUP. VISUAL CONTACT WITH THESE DRAWINGS OR OTHER PROPERTY OF RRM DESIGN GROUP SHALL CONSTITUTE PROOF OF THESE RESTRICTIONS. SUBMITTAL OF THESE DOCUMENTS FOR PUBLIC AGENCY REVIEW SHALL NOT BE CONSIDERED A WAIVER OF RRM DESIGN GROUP'S RIGHTS.
RRM DESIGN GROUP COPYRIGHT 2024.
RRM IS A CALIFORNIA CORPORATION

LICENSED LANDSCAPE ARCHITECT
LANCE WIERSCHEM LIC. 4210
07.31.2026
EXPIRATION DATE
STATE OF CALIFORNIA

CONSULTANT

AGENCY

FOURTH ST COMMUNITY CENTER AND PARK
HENDERSON AVE., PORTERVILLE, CA 93257

CONSTRUCTION PLAN

NO.	REVISION	DATE

PROJECT MANAGER: LW
DRAWN BY: DK
CHECKED BY: LW
DATE: 2024.09.19
PROJECT NUMBER: 2883-01-RC22
SHEET: LC108

PLAN CHECK REVISION 2

N:\2800\2883-01-RC22-Portenville-Fourth-St-Park-Design\Landscape-Architecture\Task-L2-ConDocs\Sheet-Files\LC-2883-01.dwg, LC108, Sep 24, 2024 2:29pm, LDWierschem

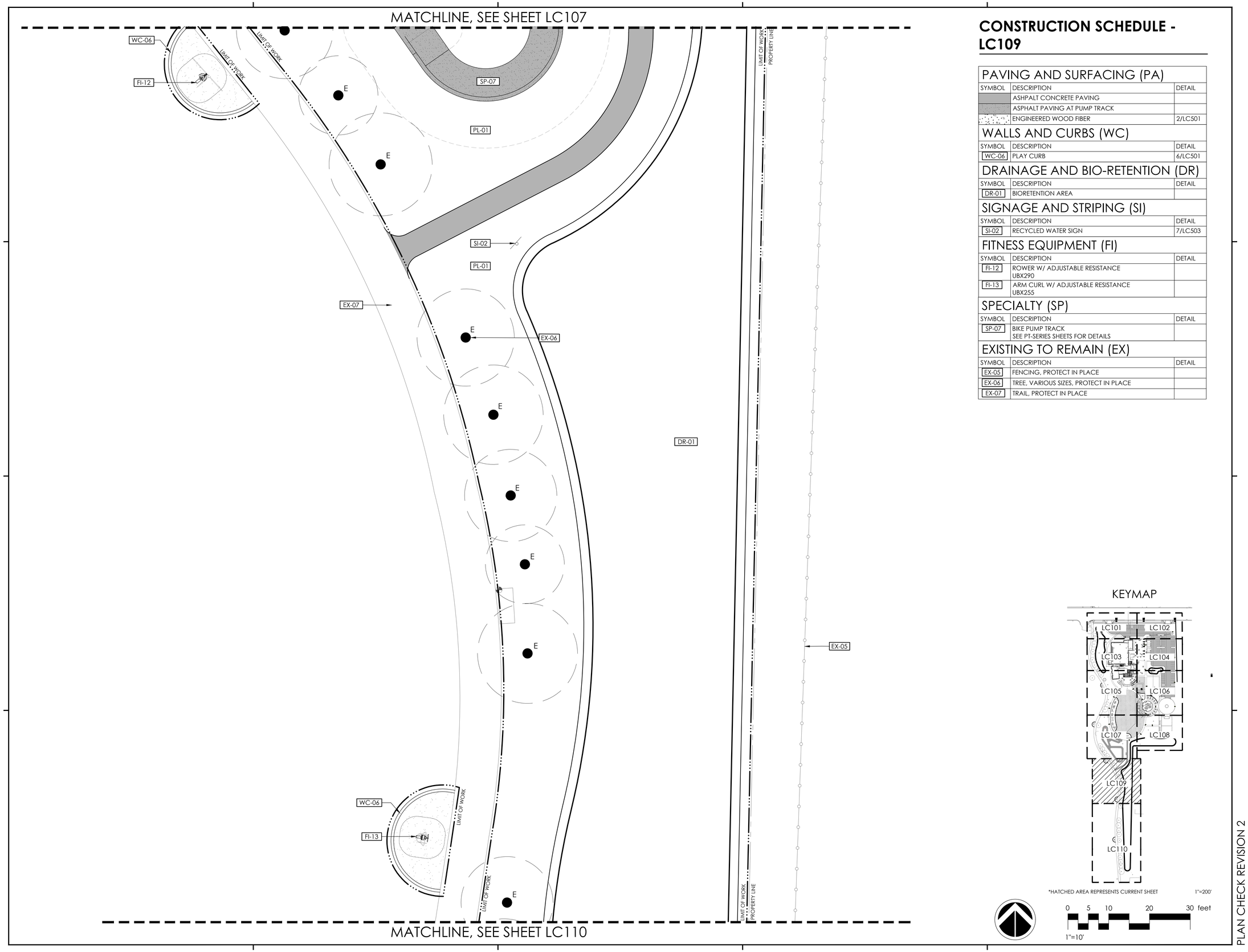

CONSTRUCTION SCHEDULE - LC109

PAVING AND SURFACING (PA)		
SYMBOL	DESCRIPTION	DETAIL
	ASHPALT CONCRETE PAVING	
	ASPHALT PAVING AT PUMP TRACK	
	ENGINEERED WOOD FIBER	2/LC501

WALLS AND CURBS (WC)		
SYMBOL	DESCRIPTION	DETAIL
WC-06	PLAY CURB	6/LC501

DRAINAGE AND BIO-RETENTION (DR)		
SYMBOL	DESCRIPTION	DETAIL
DR-01	BIORETENTION AREA	

SIGNAGE AND STRIPING (SI)		
SYMBOL	DESCRIPTION	DETAIL
SI-02	RECYCLED WATER SIGN	7/LC503

FITNESS EQUIPMENT (FI)		
SYMBOL	DESCRIPTION	DETAIL
FI-12	ROWER W/ ADJUSTABLE RESISTANCE UBX290	
FI-13	ARM CURL W/ ADJUSTABLE RESISTANCE UBX255	

SPECIALTY (SP)		
SYMBOL	DESCRIPTION	DETAIL
SP-07	BIKE PUMP TRACK SEE PT-SERIES SHEETS FOR DETAILS	

EXISTING TO REMAIN (EX)		
SYMBOL	DESCRIPTION	DETAIL
EX-05	FENCING, PROTECT IN PLACE	
EX-06	TREE, VARIOUS SIZES, PROTECT IN PLACE	
EX-07	TRAIL, PROTECT IN PLACE	

KEYMAP

*HATCHED AREA REPRESENTS CURRENT SHEET

1"=200'

0 5 10 20 30 feet

1"=10'

rrm design group
rrmdesign.com | (805) 543-1794
3765 SOUTH HIGUERA STREET, SUITE 102
SAN LUIS OBISPO, CA 93401

THE INCLUDED DRAWINGS, SPECIFICATIONS, IDEAS, DESIGNS AND ARRANGEMENTS REPRESENTED THEREBY ARE AND SHALL REMAIN THE PROPERTY OF RRM DESIGN GROUP. THEY ARE NOT TO BE USED IN WHOLE OR IN PART FOR ANY OTHER PROJECT WITHOUT WRITTEN AUTHORIZATION FROM RRM DESIGN GROUP. VISUAL CONTACT WITH THESE DRAWINGS OR SPECIFICATIONS SHALL CONSTITUTE PROOF OF ACCEPTANCE OF THE ABOVE RESTRICTIONS. SUBMITTAL OF THESE DOCUMENTS FOR PUBLIC AGENCY REVIEW SHALL NOT BE CONSIDERED A WAIVER OF RRM DESIGN GROUP'S RIGHTS.
RRM DESIGN GROUP COPYRIGHT 2024.
RRM IS A CALIFORNIA CORPORATION

LICENSED LANDSCAPE ARCHITECT
LANCE WIERSCHEM LIC. 4210
SIGNATURE
07.31.2026
EXPIRATION DATE
DATE
STATE OF CALIFORNIA

CONSULTANT

AGENCY

FOURTH ST COMMUNITY CENTER AND PARK
HENDERSON AVE., PORTERVILLE, CA 93257

CONSTRUCTION PLAN

NO.	REVISION	DATE

PROJECT MANAGER: LW
DRAWN BY: DK
CHECKED BY: LW
DATE: 2024.09.19
PROJECT NUMBER: 2883-01-RC22
SHEET: LC109

PLAN CHECK REVISION 2

N:\2800\2883-01-RC22-Porterville-Fourth-St-Park-Design\Landscape-Architecture\Task-L2-ConDocs\Sheet-Files\LC-2883-01.dwg, LC109, Sep 24, 2024 2:47pm, LDWierschem

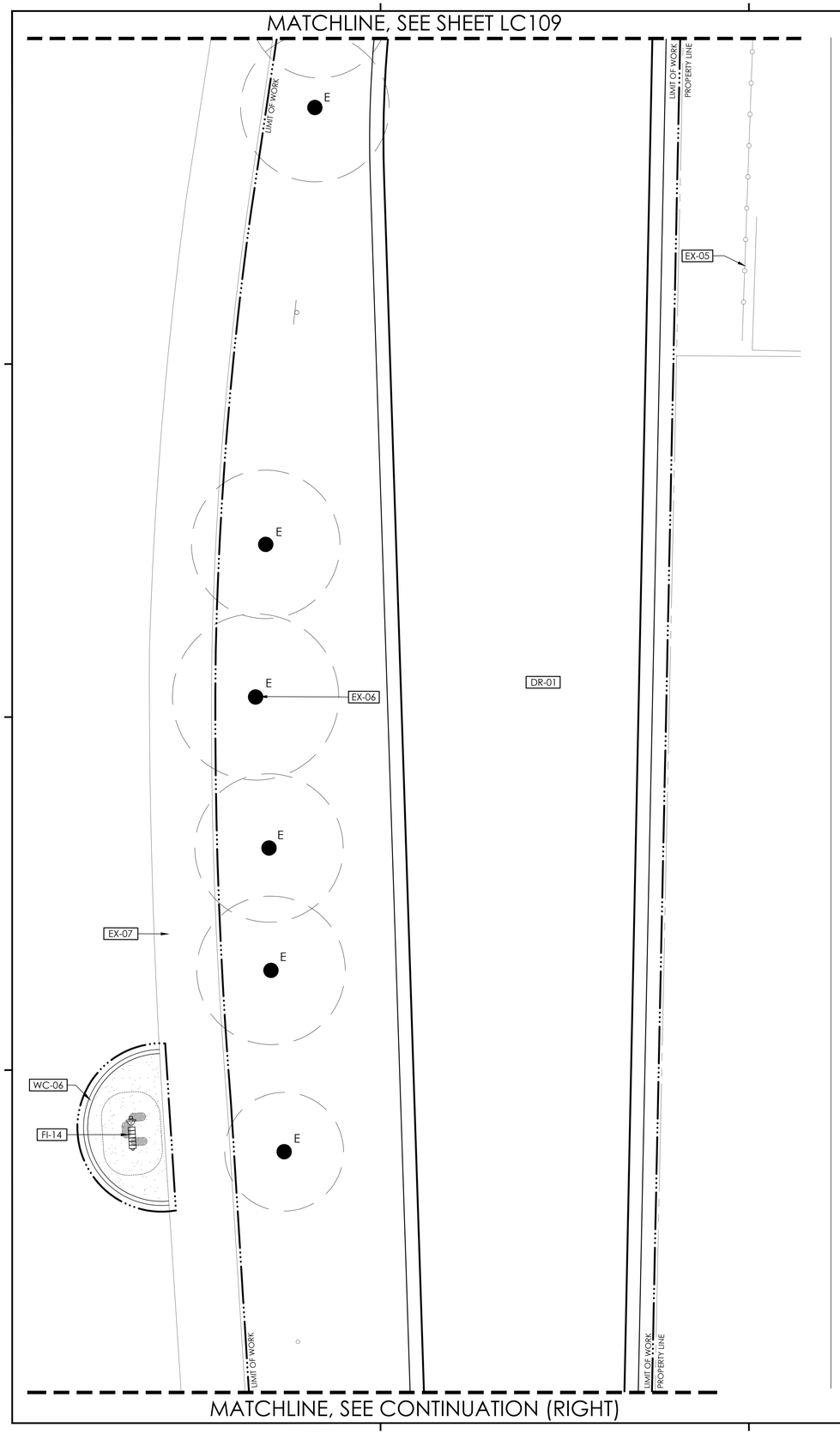

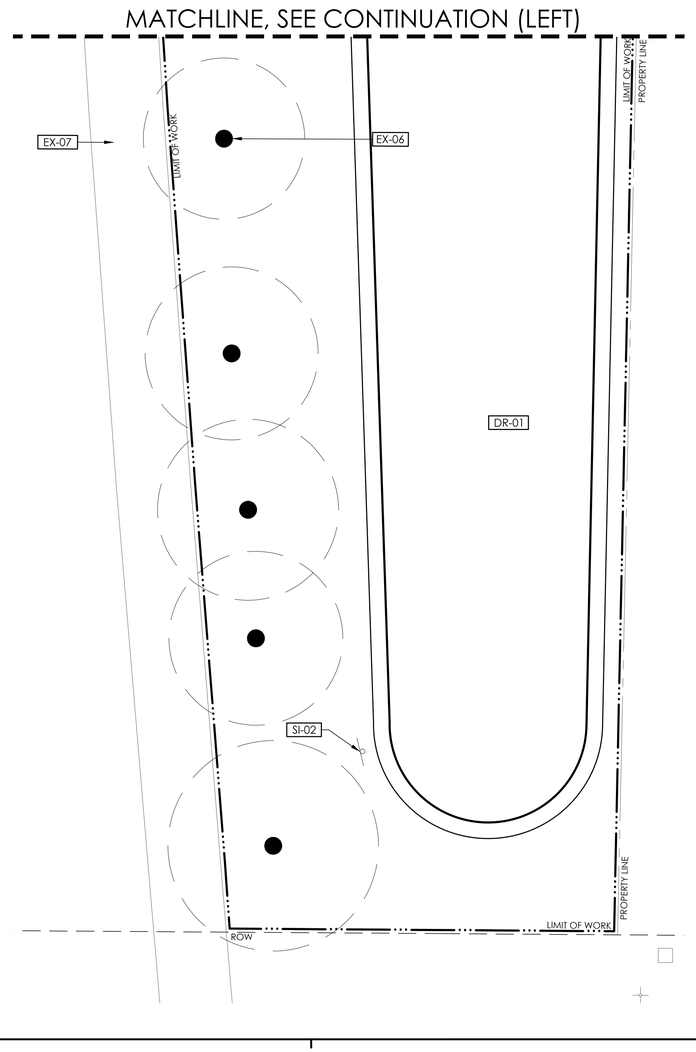

CONSTRUCTION SCHEDULE - LC110

PAVING AND SURFACING (PA)		
SYMBOL	DESCRIPTION	DETAIL
	ENGINEERED WOOD FIBER	2/LC501
WALLS AND CURBS (WC)		
SYMBOL	DESCRIPTION	DETAIL
WC-06	PLAY CURB	6/LC501
DRAINAGE AND BIO-RETENTION (DR)		
SYMBOL	DESCRIPTION	DETAIL
DR-01	BIORETENTION AREA	
PLANTING AND IRRIGATION (PL)		
SYMBOL	DESCRIPTION	DETAIL
PL-01	PLANTER AREA SEE LP101-110 AND LI101-110	
PL-02	TURF AREA SEE LP101-110 AND LI101-110	
SIGNAGE AND STRIPING (SI)		
SYMBOL	DESCRIPTION	DETAIL
SI-02	RECYCLED WATER SIGN	7/LC503
FITNESS EQUIPMENT (FI)		
SYMBOL	DESCRIPTION	DETAIL
FI-14	SIT UP BENCH UBX223	
EXISTING TO REMAIN (EX)		
SYMBOL	DESCRIPTION	DETAIL
EX-05	FENCING, PROTECT IN PLACE	
EX-06	TREE, VARIOUS SIZES, PROTECT IN PLACE	
EX-07	TRAIL, PROTECT IN PLACE	

KEYMAP

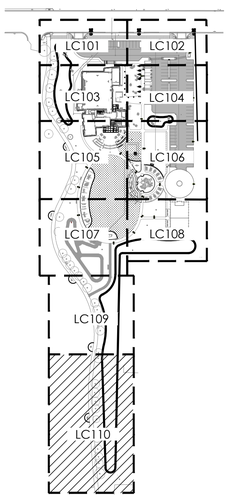

*HATCHED AREA REPRESENTS CURRENT SHEET

1"=200'

0 5 10 20 30 feet

1"=10'

rrm design group
rrmdesign.com | (805) 543-1794
3765 SOUTH HIGUERA STREET, SUITE 102
SAN LUIS OBISPO, CA 93401

THE INCLUDED DRAWINGS, SPECIFICATIONS, IDEAS, DESIGNS AND ARRANGEMENTS REPRESENTED THEREBY ARE AND SHALL REMAIN THE PROPERTY OF RRM DESIGN GROUP AND NO PART THEREOF SHALL BE COPIED, DISCLOSED TO OTHERS OR USED IN CONNECTION WITH ANY WORK OR PROJECT OTHER THAN THE SPECIFIED PROJECT FOR WHICH THEY HAVE BEEN PREPARED AND DEVELOPED WITHOUT THE WRITTEN CONSENT OF RRM DESIGN GROUP. VISUAL CONTACT WITH THESE DRAWINGS OR SPECIFICATIONS SHALL CONSTITUTE CONCLUSIVE EVIDENCE OF ACCEPTANCE OF THESE RESTRICTIONS. SUBMITTAL OF THESE DOCUMENTS FOR PUBLIC AGENCY REVIEW SHALL NOT BE CONSIDERED A WAIVER OF RRM DESIGN GROUP'S RIGHTS.
RRM DESIGN GROUP COPYRIGHT 2024.
RRM IS A CALIFORNIA CORPORATION

LICENSED LANDSCAPE ARCHITECT
LANCE WIERSCHEM LIC. #6210
SIGNATURE
07.31.2026
EXPIRATION DATE
DATE
STATE OF CALIFORNIA

CONSULTANT

AGENCY

FOURTH ST COMMUNITY CENTER AND PARK
HENDERSON AVE., PORTERVILLE, CA 93257

CONSTRUCTION PLAN

NO.	REVISION	DATE
△		
△		
△		
△		
△		
△		

PROJECT MANAGER: LW
DRAWN BY: DK
CHECKED BY: LW
DATE: 2024.09.19
PROJECT NUMBER: 2883-01-RC22
SHEET: LC110

PLAN CHECK REVISION 2

N:\2800\2883-01-RC22-Porterville-Fourth-St-Park-Design\Landscape-Architecture\Task-L2-ConDocs\Sheet-Files\LC-2883-01.dwg, LC110, Sep 24, 2024 3:10pm, LDWierschem

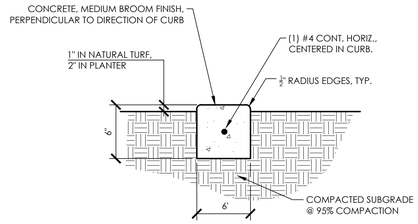

NOTES:

1. PROVIDE CONTRACTION JOINT EVERY 10' MAX.
2. PROVIDE EXPANSION JOINT EVERY 20' MAX.
3. SPACE JOINTS EVENLY BETWEEN BEGINNING AND END POINTS.

9 MOW CURB

1 1/2" = 1'-0" RRM-2800-2883.01-68

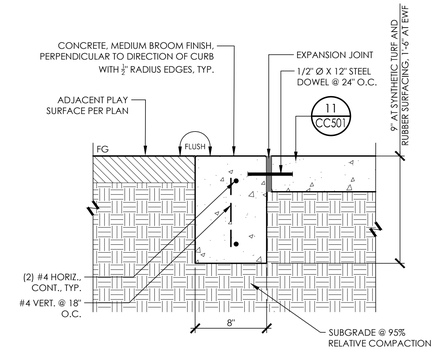

NOTES:

1. PROVIDE CONTRACTION JOINT EVERY 10' MAX.
2. PROVIDE EXPANSION JOINT EVERY 20' MAX.
3. SPACE JOINTS EVENLY BETWEEN BEGINNING AND END POINTS.

6 PLAY CURB

1 1/2" = 1'-0" RRM-2800-2883.01-58

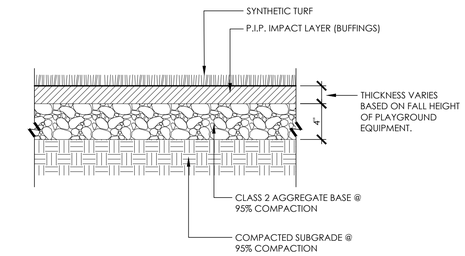

3 SYNTHETIC TURF SURFACING

1 1/2" = 1'-0" RRM-2800-2883.01-63

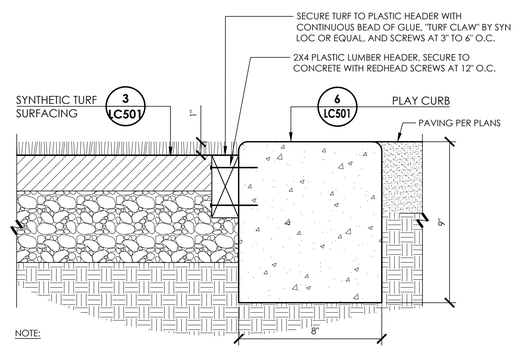

NOTE:

1. PROVIDE CONTRACTION JOINT EVERY 10' MAX IN CURB.
2. PROVIDE EXPANSION JOINT EVERY 20' MAX IN CURB.
3. SPACE JOINTS EVENLY BETWEEN BEGINNING AND END POINTS.

8 SYNTHETIC TURF AT PLAY CURB

3" = 1'-0" RRM-2800-2883.01-62

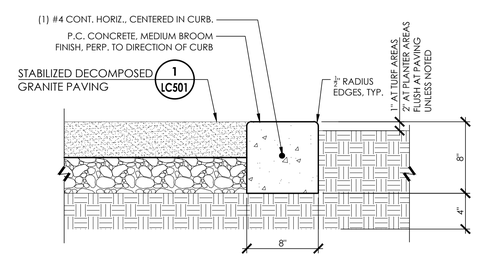

NOTES:

A. PROVIDE CONTRACTION JOINT EVERY 10' MAX.
B. PROVIDE EXPANSION JOINT EVERY 20' MAX.
C. SPACE JOINTS EVENLY BETWEEN BEGINNING AND END POINTS.

5 FLUSH CURB AT DECOMPOSED GRANITE

1 1/2" = 1'-0" RRM-2800-2883.01-19

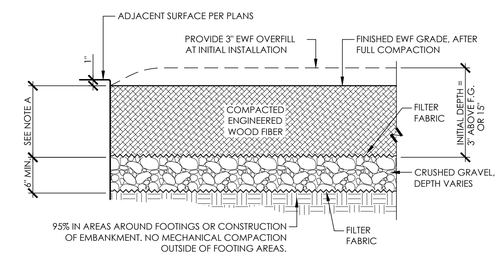

NOTES:

A. EWF MINIMUM COMPACTED DEPTH: 12" MIN. (15" MIN. UNCOMPACTED).

B. CONTRACTOR WILL INITIALLY PLACE 15" OF EWF (3" ABOVE PROPOSED EWF F.G. AS SHOWN ABOVE AND ON THE GRADING PLAN) AND COMPACT IN ACCORDANCE WITH MANUFACTURER'S RECOMMENDATIONS AND AS DIRECTED BY THE ENGINEER.

C. PROVIDE POSITIVE SUBGRADE DRAINAGE AWAY FROM PLAY EQUIPMENT FOOTINGS. SEE SHEET CU101 - CU103 AND DETAIL 32/CC504.

2 ENGINEERED WOOD FIBER SURFACING

1" = 1'-0" RRM-2800-2883.01-08

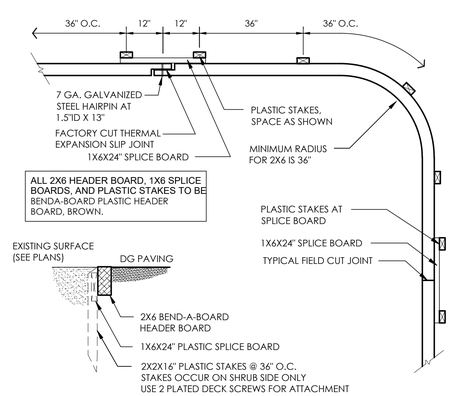

7 DECOMPOSED GRANITE HEADER

1" = 1'-0" RRM-2800-2883.01-54

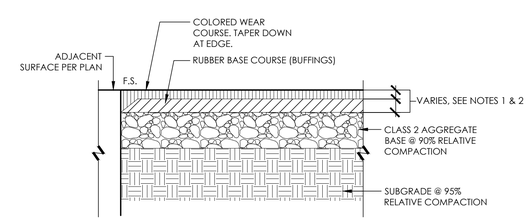

NOTES:

1. CONTRACTOR SHALL CONTACT MANUFACTURER TO DETERMINE FALL HEIGHT FOR SPECIFIED PLAY EQUIPMENT IN EACH AREA OF RUBBER SURFACING.
2. CRITICAL FALL HEIGHT OF SURFACING SHALL MEET OR EXCEED FALL HEIGHT OF EQUIPMENT. INSTALL SURFACING TO REQUIRED THICKNESS TO MEET THIS CRITICAL FALL HEIGHT.
3. CONTRACTOR SHALL SUPPLY ALL TEST DATA TO THE CITY OR THE CITY'S AUTHORIZED REPRESENTATIVE FOR REVIEW PRIOR TO INSTALLATION.
4. SEE CONSTRUCTION PLANS FOR COLOR.
5. SEE SPECIFICATIONS FOR RUBBER SURFACING PRODUCT, GRANULE SIZE AND BINDER TYPE.

4 POURED-IN-PLACE RUBBER SURFACING

3/4" = 1'-0" RRM-2800-2883.01-60

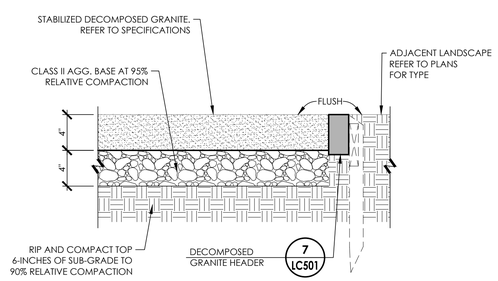

1 STABILIZED DECOMPOSED GRANITE PAVING

1 1/2" = 1'-0" RRM-2800-2883.01-82

rrm design group
rrmdesign.com | (805) 543-1794
3765 SOUTH HIGUERA STREET, SUITE 102
SAN LUIS OBISPO, CA 93401

THE INCLUDED DRAWINGS, SPECIFICATIONS, IDEAS, DESIGNS AND ARRANGEMENTS REPRESENTED THEREBY ARE AND SHALL REMAIN THE PROPERTY OF RRM DESIGN GROUP. THEY ARE NOT TO BE USED IN WHOLE OR IN PART FOR ANY PURPOSE NOT AGREED IN CONNECTION WITH ANY WORK OR PROJECT DESIGNED BY RRM DESIGN GROUP FOR PROJECT FOR WHICH THEY HAVE BEEN PREPARED AND DEVELOPED WITHOUT THE WRITTEN CONSENT OF RRM DESIGN GROUP. VISUAL CONTACT WITH THESE DRAWINGS OR SPECIFICATIONS SHALL CONSTITUTE PROOF OF ACCEPTANCE OF THE ABOVE RESTRICTIONS. SUBMITTAL OF THESE DOCUMENTS FOR PUBLIC AGENCY REVIEW SHALL NOT BE CONSIDERED A WAIVER OF RRM DESIGN GROUP'S RIGHTS.
RRM DESIGN GROUP COPYRIGHT 2024.
RRM IS A CALIFORNIA CORPORATION

LICENSED LANDSCAPE ARCHITECT
LANCE WIERSCHEM LIC. 4820
SIGNATURE
07.31.2026
EXPIRATION DATE
STATE OF CALIFORNIA

CONSULTANT

AGENCY

FOURTH ST COMMUNITY CENTER AND PARK
HENDERSON AVE., PORTERVILLE, CA 93257

CONSTRUCTION DETAILS

NO.	REVISION	DATE

PROJECT MANAGER
LW

DRAWN BY DK / AB
CHECKED BY LW

DATE
2024.09.19

PROJECT NUMBER
2883-01-RC22

SHEET
LC501

PLAN CHECK REVISION 2

N:\2800\2883-01-RC22-Porterville-Fourth-St-Park-Design\Landscape-Architecture\Task-L2-ConDocs\Sheet-Files\LC-2883-01_DETAILS.dwg, LC501, Sep 24, 2024 3:11pm, LDWierschem

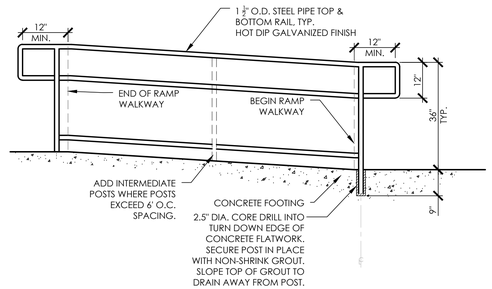

NOTE:
1. WELD ALL CONNECTIONS SMOOTH WITH CONTINUOUS WELDS
2. SEE CONSTRUCTION PLAN FOR HANDRAIL LAYOUT
3. RAMP SLOPE PER PLAN

7 HANDRAIL AT RAMP
1/2" = 1'-0" RRM-2800-2883.01-30

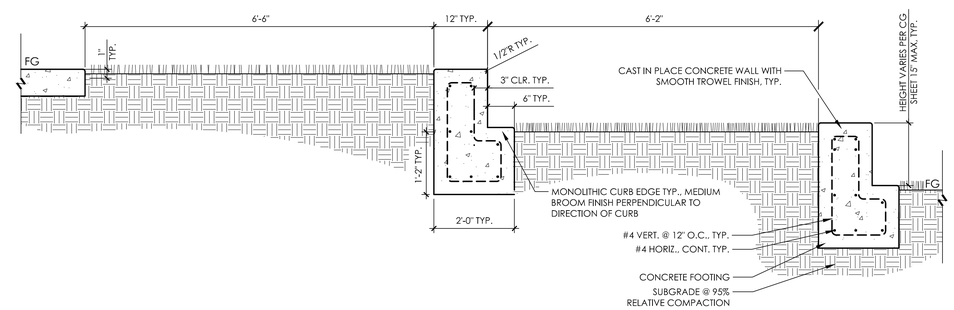

4 TERRACE WALLS
3/4" = 1'-0" RRM-2800-2883.01-98

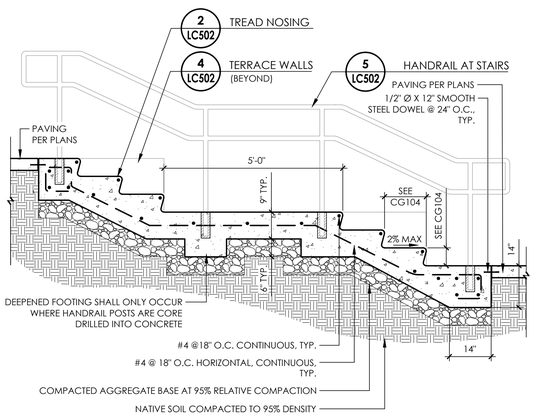

6 CONCRETE STAIRS
1/2" = 1'-0" RRM-2800-2883.01-97

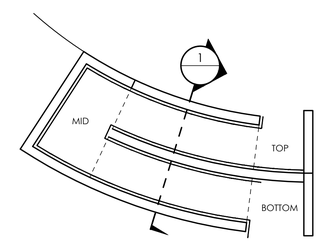

PLAN VIEW
NTS

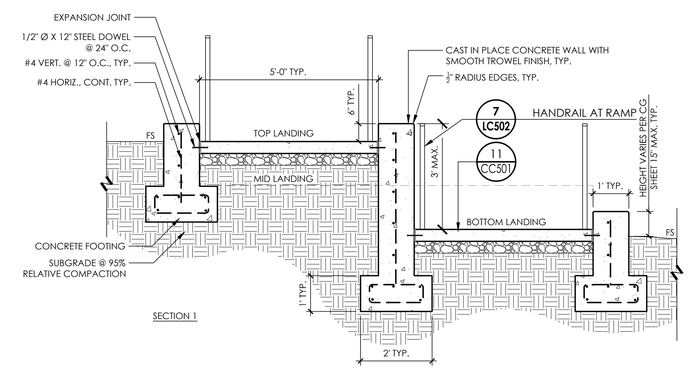

SECTION 1

3 SWITCHBACK RAMP
1/2" = 1'-0" RRM-2800-2883.01-101

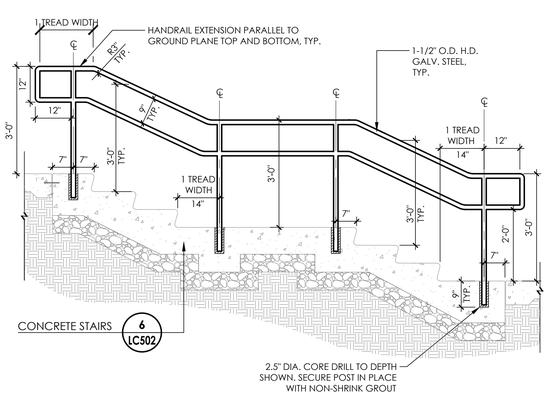

NOTES:
1. WELD ALL CONNECTIONS SMOOTH WITH CONTINUOUS WELDS. SEE CONSTRUCTION PLAN FOR HARDWARE LAYOUT
2. ALL HANDRAILS SHALL MEET CURRENT CODE REQUIREMENTS

5 HANDRAIL AT STAIRS
1/2" = 1'-0" RRM-2800-2883.01-99

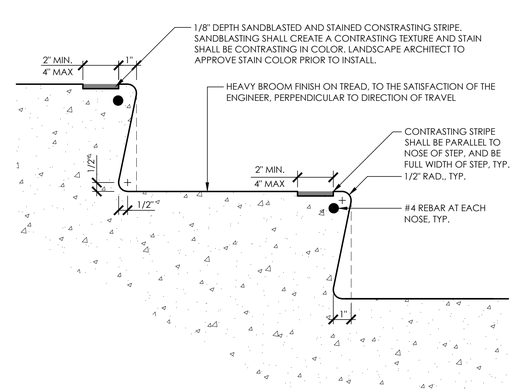

NOTES:
A. PROVIDE WARNING STRIP AT ALL TREADS AND UPPER APPROACH.
B. WARNING STRIP SHALL BE PAINTED BLACK. FINAL COLOR TO BE SUBMITTED BY CONTRACTOR AND APPROVED BY THE CITY.

2 TREAD NOSING
3" = 1'-0" RRM-2800-2883.01-40

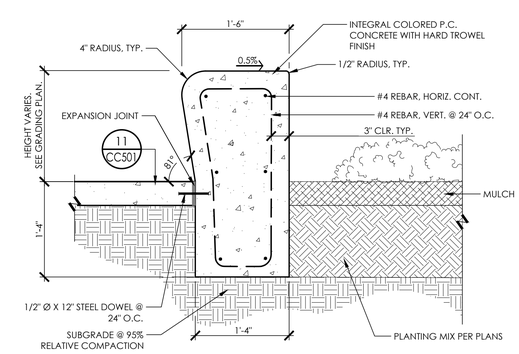

NOTES:
A. PROVIDE CONTRACTION JOINTS PERPENDICULAR TO WALL, WHERE SHOWN ON PLANS.

1 CONCRETE SEAT WALL
1" = 1'-0" RRM-2800-2883.01-25

rrm design group
rrmdesign.com | (805) 543-1794
3765 SOUTH HIGUERA STREET, SUITE 102
SAN LUIS OBISPO, CA 93401

THE INCLUDED DRAWINGS, SPECIFICATIONS, IDEAS, DESIGNS AND ARRANGEMENTS REPRESENTED THEREBY ARE AND SHALL REMAIN THE PROPERTY OF RRM DESIGN GROUP. THEY ARE NOT TO BE USED IN WHOLE OR IN PART FOR ANY PURPOSE OTHER THAN THE DESIGN CONTEMPLATED THEREBY. ALL DESIGNS, DESCRIPTIONS, DRAWINGS, SPECIFICATIONS AND PLANS WITH RESPECT TO THE PROJECT FOR WHICH THEY HAVE BEEN PREPARED AND DEVELOPED WITHOUT THE WRITTEN CONSENT OF RRM DESIGN GROUP. VISUAL CONTACT WITH THESE DRAWINGS AND SPECIFICATIONS SHALL CONSTITUTE PROOF OF ACCEPTANCE OF THE ABOVE RESTRICTIONS. SUBMITTAL OF THESE DOCUMENTS FOR PUBLIC AGENCY REVIEW SHALL NOT BE CONSIDERED A WAIVER OF RRM DESIGN GROUP'S RIGHTS.
RRM DESIGN GROUP COPYRIGHT 2024.
RRM IS A CALIFORNIA CORPORATION

LICENSED LANDSCAPE ARCHITECT
LANCE WIERSCHEM LIC. 4672
07.31.2026
SIGNATURE
DATE
STATE OF CALIFORNIA

CONSULTANT

AGENCY

FOURTH ST COMMUNITY CENTER AND PARK
HENDERSON AVE., PORTERVILLE, CA 93257

CONSTRUCTION DETAILS

NO.	REVISION	DATE

PROJECT MANAGER: LW
DRAWN BY: DK / AB
CHECKED BY: LW
DATE: 2024.09.19
PROJECT NUMBER: 2883-01-RC22
SHEET: LC502

PLAN CHECK REVISION 2

N:\2800\2883-01-RC22-Porterville-Fourth-St-Park-Design\Landscape-Architecture\Task-L2-Con\Docs\Sheet-Files\LC-2883-01_DETAILS.dwg, LC502, Sep 24, 2024 3:11pm, LDWierschem

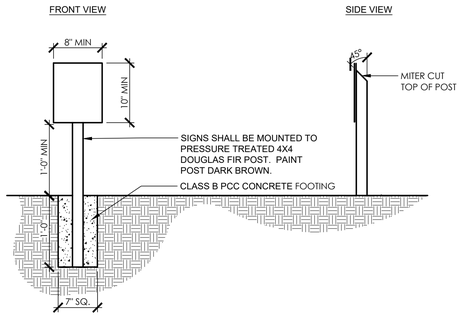

NOTES:

1. ALL SIGNS SHALL BE SIGN GRADE ALUMINUM, .080" THICK, WITH WHITE LETTERS ON A PURPLE BACKGROUND. SIGNS SHALL INCLUDE LANGUAGE STATING THAT "RECYCLED WATER" IS USED FOR IRRIGATION, SHALL CONTAIN THE THE WARNING "DO NOT DRINK", AND SHALL INCLUDE THE INDUSTRY STANDARD SYMBOL:
2. ALL MOUNTING HARDWARE SHALL BE GALVANIZED STEEL.
3. SIGN LETTERS SHALL BE REFLECTIVE MATERIAL.
4. HEIGHT OF SIGNS WILL DEPEND ON LOCATION AND SURROUNDING LANDSCAPE PLANT TYPES. IN ALL CASES, SIGN SHALL BE VISIBLE TO THE PUBLIC.

7 RECLAIMED WATER SIGN

1" = 1'-0" RRM-2800-2883.01-73

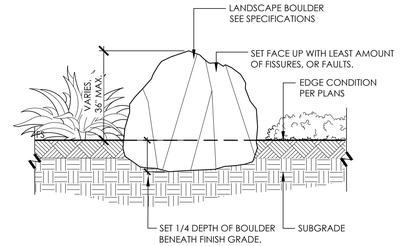

BOULDER SIZING:

PROVIDE QUANTITIES OF BOULDERS AS SHOWN ON PLANS. BOULDER SIZES ARE LABELED ON PLANS PER THE SYMBOLS SHOWN BELOW.

SYMBOL	SIZE RANGE (H, L & W)
A	36" X 48" X 48"
B	48" X 60" X 60"

NOTES:

1. LANDSCAPE ARCHITECT TO APPROVE BOULDERS AT QUARRY OR SUPPLIER, OR FROM PHOTOGRAPHS THAT CLEARLY SHOW SIZE AND SHAPE.
2. DUE TO THE NONSTANDARD SIZE AND SHAPE OF BOULDERS, THESE SIZES SHOULD BE USED AS A REFERENCE WHERE THE ACTUAL SIZES ARE WITHIN SPEC.
3. PLACE BOULDERS UNDER DIRECTION OF LANDSCAPE ARCHITECT.

4 NOT USED

3 LANDSCAPE BOULDERS

1/2" = 1'-0" RRM-2800-2883.01-01

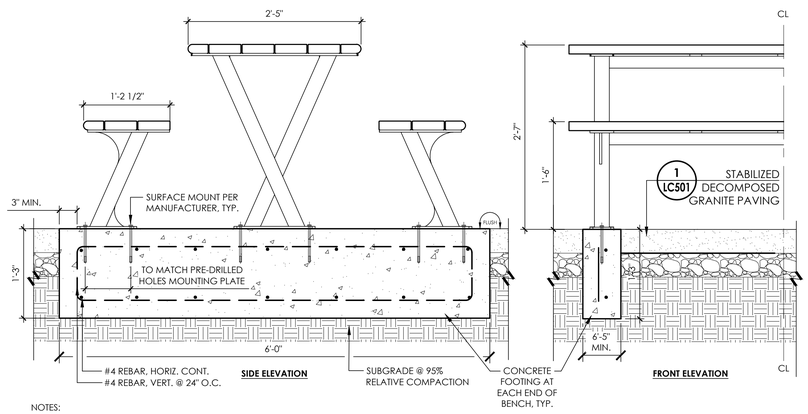

NOTES:

1. BENCHES SHALL BE INSTALLED LEVEL, AND PER MANUFACTURER SPECIFICATION. REFER TO ANOVAFURNISHINGS.COM FOR MORE INFORMATION.

6 BENCH ON FOOTING IN DECOMPOSED GRANITE

1" = 1'-0" RRM-2800-2883.01-66

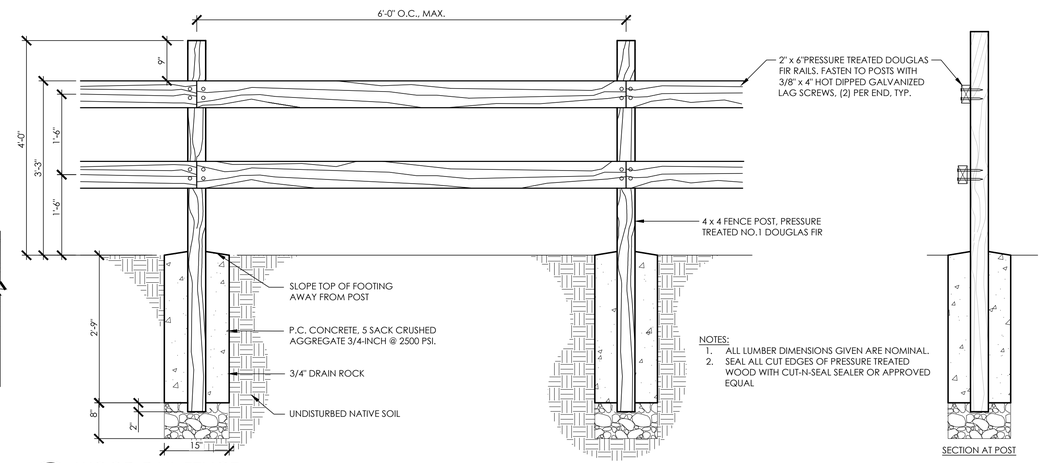

NOTES:

1. ALL LUMBER DIMENSIONS GIVEN ARE NOMINAL.
2. SEAL ALL CUT EDGES OF PRESSURE TREATED WOOD WITH CUT-N-SEAL SEALER OR APPROVED EQUAL

2 WOOD RAIL FENCE

3/4" = 1'-0" RRM-2800-2883.01-43

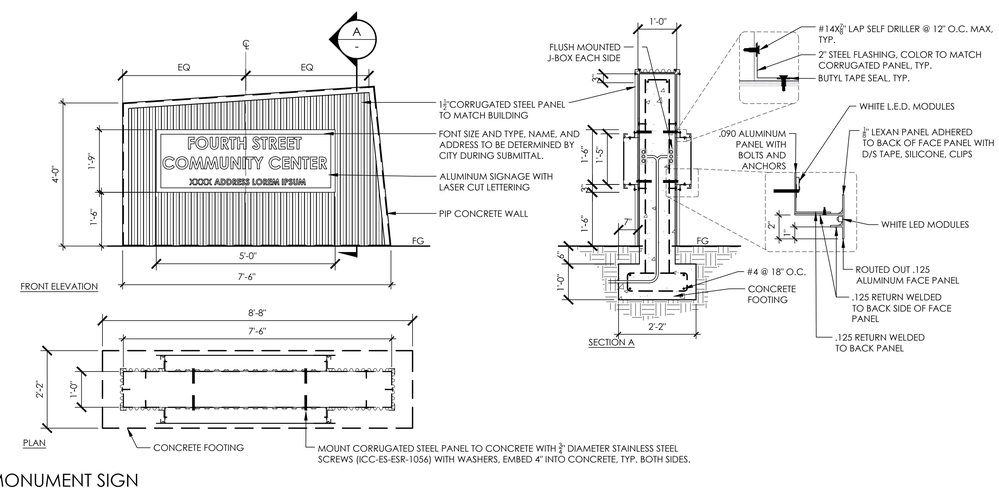

5 MONUMENT SIGN

1/2" = 1'-0" RRM-2800-2883.01-49

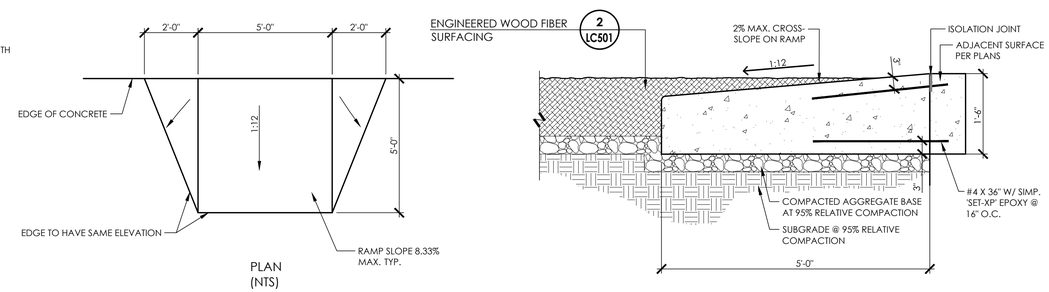

1 ACCESS RAMP AT PLAYGROUND

3/4" = 1'-0" RRM-2800-2883.01-22

rrm design group
rrmdesign.com | (805) 543-1794
3765 SOUTH HIGUERA STREET, SUITE 102
SAN LUIS OBISPO, CA 93401

THE INCLUDED DRAWINGS, SPECIFICATIONS, IDEAS, DESIGNS AND ARRANGEMENTS REPRESENTED THEREBY ARE AND SHALL REMAIN THE PROPERTY OF RRM DESIGN GROUP. THEY ARE NOT TO BE USED IN WHOLE OR IN PART FOR ANY PURPOSE NOT SPECIFIED HEREIN WITHOUT THE WRITTEN CONSENT OF RRM DESIGN GROUP. VISUAL CONTACT WITH THESE DRAWINGS OR PUBLICATION HEREOF SHALL NOT CONSTITUTE A WAIVER OF RRM DESIGN GROUP'S RIGHTS. SUBMITTAL OF THESE DOCUMENTS FOR PUBLIC AGENCY REVIEW SHALL NOT BE CONSIDERED A WAIVER OF RRM DESIGN GROUP'S RIGHTS.
RRM DESIGN GROUP COPYRIGHT 2024.
RRM IS A CALIFORNIA CORPORATION

LICENSED LANDSCAPE ARCHITECT
LANCE WIERSCHEM LIC. 4210
SIGNATURE
07.31.2026
EXPIRATION DATE
STATE OF CALIFORNIA

CONSULTANT

AGENCY

PLAN CHECK REVISION 2

FOURTH ST COMMUNITY CENTER AND PARK
HENDERSON AVE., PORTERVILLE, CA 93257

CONSTRUCTION DETAILS

NO.	REVISION	DATE
△		
△		
△		
△		
△		
△		

PROJECT MANAGER
LW
DRAWN BY DK / AB
CHECKED BY LW
DATE
2024.09.19
PROJECT NUMBER
2883-01-RC22
SHEET
LC503

N:\2800\2883-01-RC22-Portenville-Fourth-St-Park-Design\Landscape-Architecture\Task-L2-ConDocs\Sheet-Files\LC-2883-01_DETAILS.dwg, LC503, Sep 24, 2024 3:11pm, LDWierschem

COMPLIENCE WITH MWELO

1. PROJECT INFORMATION - SEE COVER PAGE OF THIS DRAWING SET FOR ALL INFORMATION INCLUDING, DATE, PROJECT APPLICANT AND OWNER, AND ADDRESS.

   TOTAL LANDSCAPE AREA: 107,259 SF
   - SHRUBS, & GROUNDCOVERS - 68,900 SF
   - TREES - 3,200 SF
   - IRRIGATED TURF AREAS - 33,379 SF
   - NON-IRRIGATED SYNTHETIC TURF - 4,500 SF

   ESTIMATED TOTAL WATER USE (ETWU): **4,625,582 GAL/YR**
   MAXIMUM APPLIED WATER ALLOWANCE (MAWA): **4,625,582 GAL/YR**

2. PROJECT TYPE - NEW CONSTRUCTION
3. WATER SUPPLY - POTABLE / NON-POTABLE
4. CHECKLIST OF ALL DOCUMENTS IN LANDSCAPE DOCUMENT PACKAGE:
   - X LANDSCAPE DESIGN PLAN - INCLUDED IN THESE LANDSCAPE DRAWINGS
   - X IRRIGATION DESIGN PLAN - INCLUDED IN THESE LANDSCAPE DRAWINGS
   - X GRADING DESIGN PLAN - PER CG SERIES SHEETS
5. WATER BUDGET CALCULATIONS (MAWA) AND (ETWU). SEE BELOW.
6. AREAS WITHIN THE PROJECT SITE THAT ARE TO BE USED FOR RECREATIONAL PURPOSES AND ANY AREAS THAT THAT WILL BE IRRIGATED WITH RECYCLED WATER ARE CLASSIFIED AS SPECIAL LANDSCAPE AREAS. SPECIAL LANDSCAPE AREAS HAVE BEEN INCORPORATED INTO THE FOLLOWING CALCULATIONS AND ARE REFLECTED IN THE MAXIMUM APPLIED WATER ALLOWANCE PER CALIFORNIA CODE OF REGULATIONS AND THE MODEL WATER EFFICIENT LANDSCAPE ORDINANCE. SEE SOURCE BELOW.
7. I AGREE TO COMPLY WITH THE REQUIREMENTS OF MWELO.

CONTRACTOR IS RESPONSIBLE FOR THE FOLLOWING ITEMS:

http://www.water.ca.gov/wateruseefficiency/docs/MWELO09-10-09.pdf

1. COMPOSTING

   Incorporate compost at a rate of at least four cubic yards per 1,000 square feet to a depth of six inches into landscape area - unless contra-indicated by a soils report.

2. PLANT MATERIAL

   For residential areas, install climate adapted plants that require occasional, little or no summer water (average WUCOLs plant factor 0.3) for 75% of the plant area excluding edibles and areas using recycled water.

3. IRRIGATION SYSTEM

   Shall comply with the following:

   Automatic irrigaiton controllers are required and must use evapotranspiration or soil moisture sensor data and utilize a rain sensor.

   Irrigation controllers shall be a type which does not lose programming data in the event the primary power source is interrupted.

   Pressure regulators shall be installed on the irrigation system o ensure the dynamic pressure of the system is within the manufactures recommended pressure range.

   All irrigaiton emiision dvices must meet the requirements set in the ANSI standard, ASABE/ICC 802-2014 "Landscape Irrigation Sprinkler and Emitter Standard," All sprinkler heads installed in the landscape must document a distribution uniformity low quarter of 0.65 or higher using the protocol defined in ASABE/ICC 802-2014.

   Areas less than ten (10) feet in width in any direction shall be irrigated with subsurface irrigation or other means that produces no runoff or overspray.

4. FINAL INSPECTION

   At the time of final inspection, the CONTRACTOR must provide the owner of the property with a certificate of completion, certificate of installation, irrigation schedule and a schedule of landscape and irrigation maintenance.

1

WATER USE CALCULATIONS

Reference Evapotranspiration (Eto) 52.1

Hydrozone # /Planting Description*	Plant Factor (PF)	Irrigation Method	Irrigation Efficiency (IE)	ETAF (PF/IE)	Landscape Area (Sq, ft)	ETAF x Area	Estimated Total Water Use (ETWU)
Regular Landscape Areas							
1 - DT Shrubs	0.25	Drip	0.91	0.27	0	0.00	0
2-DT Trees	0.25	Bubbler	0.8	0.31	0	0.00	0
3-Mod Shrubs	0.5	Drip	0.91	0.55	0	0.00	0
4 - Mod Trees	0.5	Bubbler	0.8	0.63	0	0.00	0
5 - Turf	0.9	Spray	0.71	1.27	0	0.00	0
				Totals	0	0.00	0
Special Landscape Areas							
Play Field				1	24961		806,290
Recirculated				1	118,237		3,819,292
Other				0	0		0
				Totals	143198		4,625,582
						ETWU Total	4,625,582
						Maximum Allowed Water Allowance (MAWA)	**4,625,582**

IRRIGATION SCHEDULE

SYMBOL	MANUFACTURER/MODEL/DESCRIPTION	ARC	PSI	RADIUS	DETAIL
	HUNTER RZWS-18-CV 50 18IN. LONG RZWS WITH INSTALLED .25 GPM OR .50 GPM BUBBLER OPTIONS, CHECK VALVE, 1/2IN. SWING JOINT FOR CONNECTION TO 1/2IN. PIPE	360	30	3'	

SYMBOL	MANUFACTURER/MODEL/DESCRIPTION	PSI	RADIUS	DETAIL
25	HUNTER I-20-06-MPR 25 TURF ROTOR, 6" POP-UP. ADJUSTABLE AND FULL CIRCLE. PLASTIC RISER. DRAIN CHECK VALVE. MPR NOZZLE.	45	25'	
30	HUNTER I-20-06-MPR 30 TURF ROTOR, 6" POP-UP. ADJUSTABLE AND FULL CIRCLE. PLASTIC RISER. DRAIN CHECK VALVE. MPR NOZZLE.	45	30'	
35	HUNTER I-20-06-MPR 35 TURF ROTOR, 6" POP-UP. ADJUSTABLE AND FULL CIRCLE. PLASTIC RISER. DRAIN CHECK VALVE. MPR NOZZLE.	45	35'	

SYMBOL	MANUFACTURER/MODEL/DESCRIPTION
	HUNTER ICZ-101-40-LF-R DRIP CONTROL ZONE KIT. 1IN. ICV GLOBE VALVE WITH 1IN. HY100 FILTER SYSTEM. PRESSURE REGULATION: 40PSI. FLOW RANGE: .5 GPM - 15 GPM. 150 MESH STAINLESS STEEL SCREEN. RECLAIMED PURPLE FILTER COVER.
	HUNTER ICZ-151-XL-40 DRIP CONTROL ZONE KIT. 1-1/2IN. ICV GLOBE VALVE WITH 1IN. HY100 FILTER SYSTEM. PRESSURE REGULATION: 40PSI. FLOW RANGE: 20 GPM TO 60 GPM. 120 MESH STAINLESS STEEL SCREEN. 1-1/2IN. INLET X SINGLE 2IN. OUTLET
	PIPE TRANSITION POINT ABOVE GRADE PIPE TRANSITION POINT FROM PVC LATERAL TO DRIP TUBING WITH RISER TO ABOVE GRADE INSTALLATION.
	AREA TO RECEIVE DRIP EMITTERS RAIN BIRD PCT PRESSURE COMPENSATING THREADED LOW-FLOW BUBBLERS. OFFERED IN 5 GPH, 7 GPH, AND 10 GPH MODELS, WITH 1/2IN. FPT THREADED INLET. LIGHT BROWN = 5 GPH, VIOLET = 7 GPH, AND GREEN = 10 GPH.
	PCT-05 emitters (2 assigned to each 24"box plant)
	PCT-05 emitters (1 assigned to each 1 gal plant)
	PCT-05 emitters (1 assigned to each 5 gal plant)
	PCT-05 emitters (2 assigned to each 15 gal plant)
	AREA TO RECEIVE DRIPLINE HUNTER HDL-06-18-R HDL-06-18-R: HUNTER DRIPLINE WITH 0.6 GPH FLOW. LIGHT BROWN TUBING WITH PURPLE STRIPING. EMITTERS AT 18" O.C. DRIPLINE LATERALS SPACED AT 18" APART, WITH EMITTERS OFFSET FOR TRIANGULAR PATTERN. INSTALL WITH HUNTER PLD BARBED OR PLD-LOC FITTINGS.

SYMBOL	MANUFACTURER/MODEL/DESCRIPTION
	HUNTER ICV-G 1IN., 1-1/2IN., 2IN., AND 3IN. PLASTIC ELECTRIC REMOTE CONTROL VALVES, GLOBE CONFIGURATION, WITH NPT THREADED INLET/OUTLET, FOR COMMERCIAL/MUNICIPAL USE.
	HUNTER ICV-G-R 1IN., 1-1/2IN., 2IN., AND 3IN. PLASTIC ELECTRIC REMOTE CONTROL VALVES, GLOBE CONFIGURATION, WITH NPT THREADED INLET/OUTLET, FOR COMMERCIAL/MUNICIPAL USE. WITH RECLAIMED WATER ID, PURPLE HANDLE.
	LANDSCAPE PRODUCTS INC. BBV 1/2IN., 3/4IN., 1IN., 1-1/4IN., 1-1/2IN., 2IN., 2-1/2IN., 3IN. FULL PORT BRASS BALL VALVE. SUITABLE FOR A FULL RANGE OF LIQUIDS AND GASES IN RESIDENTIAL AND COMMERCIAL APPLICATIONS.
MV	HUNTER ICV-G MASTER VALVE 2" 1IN., 1-1/2IN., 2IN., AND 3IN. PLASTIC ELECTRIC MASTER VALVE, GLOBE CONFIGURATION, WITH NPT THREADED INLET/OUTLET, FOR COMMERCIAL/MUNICIPAL USE.
MV2	HUNTER ICV-G MASTER VALVE 2" 1IN., 1-1/2IN., 2IN., AND 3IN. PLASTIC ELECTRIC MASTER VALVE, GLOBE CONFIGURATION, WITH NPT THREADED INLET/OUTLET, FOR COMMERCIAL/MUNICIPAL USE.
MV2	HUNTER ICV-G-R MASTER VALVE 2" 1IN., 1-1/2IN., 2IN., AND 3IN. PLASTIC ELECTRIC MASTER VALVE, GLOBE CONFIGURATION, WITH NPT THREADED INLET/OUTLET, FOR COMMERCIAL/MUNICIPAL USE. WITH RECLAIMED WATER ID, PURPLE HANDLE.
BF1	FEBCO 825Y 2" REDUCED PRESSURE BACKFLOW PREVENTER
C	HUNTER I2C-4800-SS 48 STATION OUTDOOR MODULAR CONTROLLER. WITH FIVE ICM-800 MODULE. COMMERCIAL USE. STAINLESS STEEL CABINET.
RS	HUNTER RFC-SGM RAIN AND FREEZE SENSOR. WITH CONDUIT INSTALLATION, MOUNT AS NOTED. NORMALLY CLOSED SWITCH. OPTIONAL GUTTER MOUNT.
RK	HUNTER ROAM-KIT TRANSMITTER, AND RECEIVER. ROAM REMOTE ALLOWS FOR CONTROLLER OPERATION UP TO 1000 FEET. RESIDENTIAL/LIGHT COMMERCIAL USE. WORKS WITH HUNTER ACC, I-CORE, PRO-C, PCC, AND X-CORE CONTROLLERS. SMARTPORT WIRING HARNESS INCLUDED.
FS	TORO TFS 1/2IN., 3/4IN., 1IN., 1-1/2IN., 2IN., 3IN., AND 4IN. PLASTIC TEE SIZES. EFFECTIVE FLOW MONITORING, EVEN IN FLOWS LESS THAN 5 GPM. COMPATIBLE WITH TORO AND COMPETITIVE CONTROLLERS. IMPELLER-BASED, PVC DESIGN.
P1	BOOSTER PUMP 1 BOOSTER PUMP ASSEMBLY FOR STORAGE TANK SYSTEM #: IBPCO-5-2-2.5/VFD-F PIPE SIZE: 2.5" E-VOLTAGE: 208/230 OR 460 VAC E-PHASE: 1 OR 3 PHASE 60 HZ PUMP MODEL #: PACO 1270-9 PUMP CAPACITY: 75 GPM PUMP TOTAL HEAD: 100 FT PUMP HP: 5 HP PUMP RPM: 3500 RPM SYSTEM AMPERAGE: UNDETERMINED FOR MORE INFORMATION SEE: BARRETT ENGINEERED PUMPS CISTERN SPEC SHEET +35PSI.
P2	BOOSTER PUMP 2 BOOSTER PUMP ASSEMBLY FOR STORAGE TANK SYSTEM #: IBSSHM-2-2-1.5/OPTIONS PIPE SIZE: 1.5" E-VOLTAGE: 208/230 OR 460 VAC E-PHASE: 1 OR 3 PHASE 60 HZ PUMP MODEL #: SSHM 4 STAGE PUMP CAPACITY: 30 GPM PUMP TOTAL HEAD: 125 FT PUMP HP: 2 HP PUMP RPM: 3500 RPM SYSTEM AMPERAGE: UNDETERMINED FOR MORE INFORMATION SEE: BARRETT ENGINEERED PUMPS CISTERN SPEC SHEET
M	WATER METER 2" NEW 2" WATER METER - POTABLE STATIC PRESSURE: 53 PSI WATER PURVEYOR: CITY OF PORTERVILLE
POC2	POINT OF CONNECTION 4" LINE CONNECTION TO STORAGE TANK.
	IRRIGATION LATERAL LINE: PVC SCHEDULE 40
	IRRIGATION LATERAL LINE: PVC SCHEDULE 40-NP RW FROM SPLASHPAD, FOR ALL DRIP AREAS AND TREE BUBBLERS
	IRRIGATION MAINLINE: PVC SCHEDULE 40 STANDARD MAINLINE, AND SERVICING TURF AREA/S.
	IRRIGATION MAINLINE: PVC SCHEDULE 40-NP NP FROM STORAGE TANK, SERVICING ALL DRIP AREAS AND TREE BUBBLERS.
	PIPE SLEEVE: DUCTILE IRON PIPE- CLASS 350

Valve Callout
- # — Valve Number
- # — Valve Flow
- #" — Valve Size

rrm design group
rrmdesign.com | (805) 543-1794
3765 SOUTH HIGUERA STREET, SUITE 102
SAN LUIS OBISPO, CA 93401

THE INCLUDED DRAWINGS, SPECIFICATIONS, IDEAS, DESIGNS AND ARRANGEMENTS REPRESENTED THEREIN ARE AND SHALL REMAIN THE PROPERTY OF RRM DESIGN GROUP. THEY ARE NOT TO BE USED IN WHOLE OR IN PART FOR ANY PURPOSE OTHER THAN THE USED IN CONNECTION WITH ANY WORK OR PROJECT OTHER THAN THE SPECIFIED PROJECT FOR WHICH THEY HAVE BEEN PREPARED AND DEVELOPED WITHOUT THE WRITTEN CONSENT OF RRM DESIGN GROUP. VISUAL CONTACT WITH THESE DRAWINGS OR OTHER PROPERTY OF RRM DESIGN GROUP SHALL CONSTITUTE PROOF OF THESE RESTRICTIONS. SUBMITTAL OF THESE DOCUMENTS FOR PUBLIC AGENCY REVIEW SHALL NOT BE CONSIDERED A WAIVER OF RRM DESIGN GROUP'S RIGHTS.
RRM DESIGN GROUP COPYRIGHT 2024.
RRM IS A CALIFORNIA CORPORATION

LICENSED LANDSCAPE ARCHITECT
LANCE WIERSCHEM LIC. 4210
SIGNATURE
07.31.2026
EXPIRATION DATE
STATE OF CALIFORNIA

CONSULTANT

AGENCY

FOURTH ST COMMUNITY CENTER AND PARK
HENDERSON AVE., PORTERVILLE, CA 93257

IRRIGATION NOTES, SCHEDULE AND CALCULATIONS

NO.	REVISION	DATE
1	PLAN CHECK REVISION 1	05/17/24

PLAN CHECK REVISION 2

PROJECT MANAGER LW
DRAWN BY DK
CHECKED BY LW
DATE 2024.09.19
PROJECT NUMBER 2883-01-RC22
SHEET LI001

N:\2800\2883-01-RC22-Porterville-Fourth-St-Park-Design\Landscape-Architecture\Task-L2-ConDocs\Sheet-Files\LI-2883-01.dwg, LI001, Sep 24, 2024 3:22pm, LDWierschem

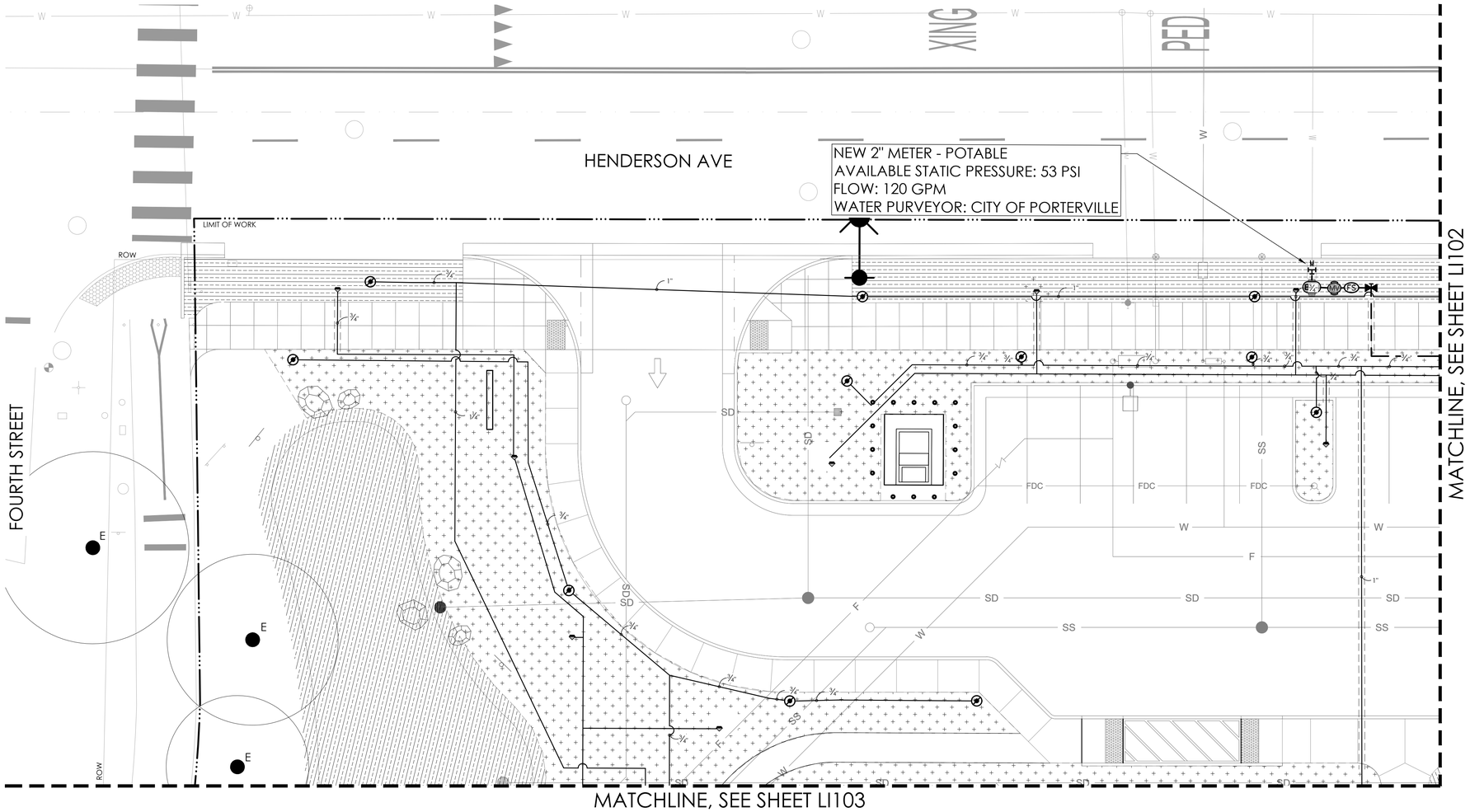

NOTES

1. LIMIT OF WORK DEPICTED IS APPROXIMATE. ACTUAL LIMIT OF WORK MAY VARY BASED ON FIELD CONDITIONS.
2. REFER TO SHEET LI001 FOR IRRIGATION SCHEDULE AND IRRIGATION NOTES.

0 5 10 20 30 feet
1"=10'

PLAN CHECK REVISION 2

rrm design group
rrmdesign.com | (805) 543-1794
3765 SOUTH HIGUERA STREET, SUITE 102
SAN LUIS OBISPO, CA 93401

THE INCLUDED DRAWINGS, SPECIFICATIONS, IDEAS, DESIGNS AND ARRANGEMENTS REPRESENTED THEREBY ARE AND SHALL REMAIN THE PROPERTY OF RRM DESIGN GROUP AND NO PART THEREOF SHALL BE COPIED, DISCLOSED TO OTHERS OR USED IN CONNECTION WITH ANY WORK OR PROJECT OTHER THAN THE SPECIFIED PROJECT FOR WHICH THEY HAVE BEEN PREPARED AND DEVELOPED WITHOUT THE WRITTEN CONSENT OF RRM DESIGN GROUP. VISUAL CONTACT WITH THESE DRAWINGS OR SPECIFICATIONS SHALL CONSTITUTE CONCLUSIVE EVIDENCE OF ACCEPTANCE OF THESE RESTRICTIONS. SUBMITTAL OF THESE DOCUMENTS FOR PUBLIC AGENCY REVIEW SHALL NOT BE CONSIDERED A WAIVER OF RRM DESIGN GROUP'S RIGHTS.
RRM DESIGN GROUP COPYRIGHT 2024.
RRM IS A CALIFORNIA CORPORATION

LICENSED LANDSCAPE ARCHITECT
LANCE WIERSCHEM LIC. #6210
SIGNATURE
07.31.2026
EXPIRATION DATE
DATE
STATE OF CALIFORNIA

CONSULTANT

AGENCY

FOURTH ST COMMUNITY CENTER AND PARK
HENDERSON AVE., PORTERVILLE, CA 93257

IRRIGATION PLAN

NO.	REVISION	DATE
△		
△		
△		
△		
△		
△		

PROJECT MANAGER: LW
DRAWN BY: DK
CHECKED BY: LW
DATE: 2024.09.19
PROJECT NUMBER: 2883-01-RC22
SHEET: LI101

N:\2800\2883-01-RC22-Porterville-Fourth-St-Park-Design\Landscape-Architecture\Task-L2-ConDocs\Sheet-Files\LI-2883-01.dwg, LI101, Sep 24, 2024 3:26pm, LDWierschem

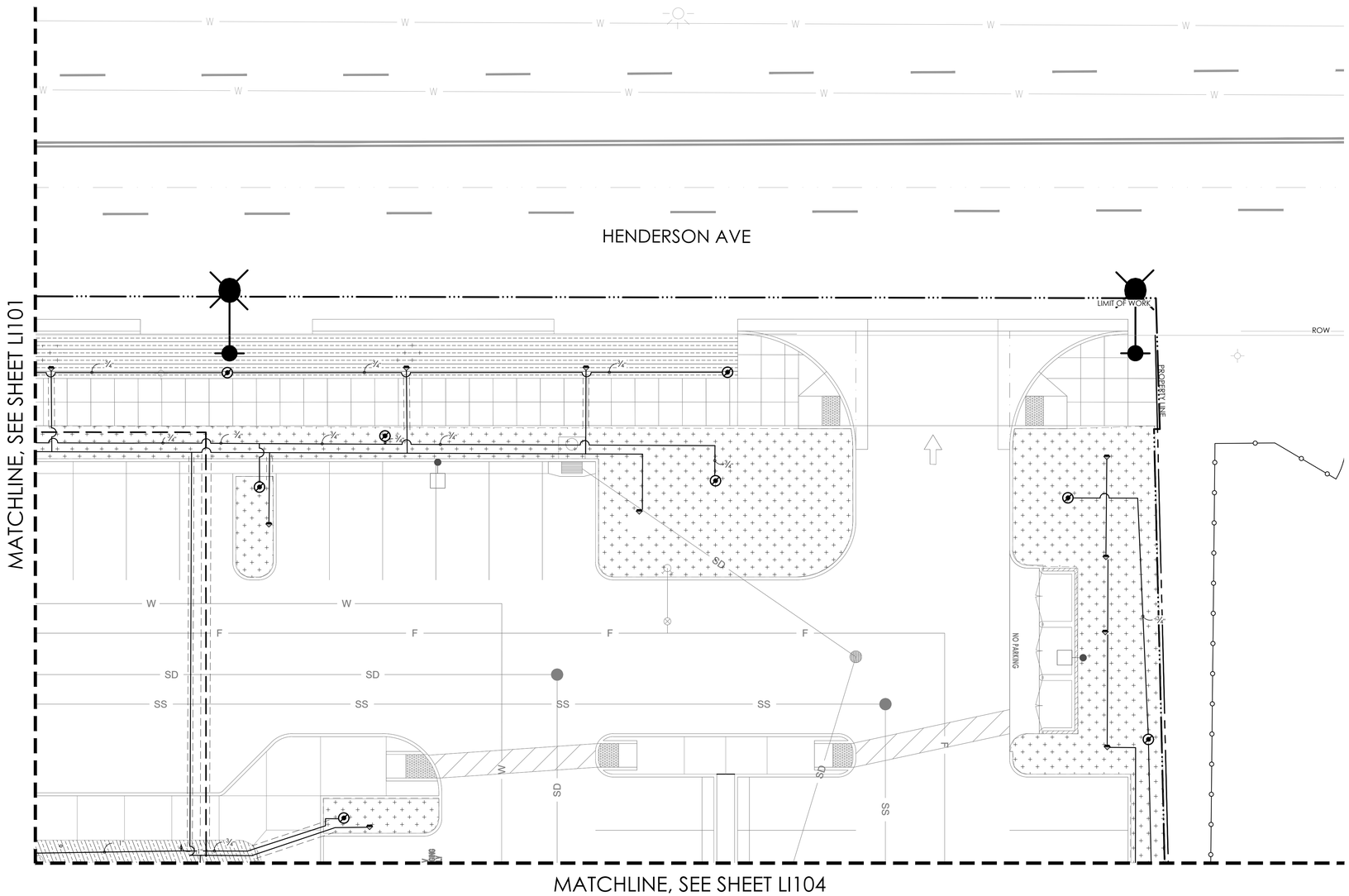

NOTES

1. LIMIT OF WORK DEPICTED IS APPROXIMATE. ACTUAL LIMIT OF WORK MAY VARY BASED ON FIELD CONDITIONS.
2. REFER TO SHEET LI001 FOR IRRIGATION SCHEDULE AND IRRIGATION NOTES.

0 5 10 20 30 feet
1"=10'

rrm design group
rrmdesign.com | (805) 543-1794
3765 SOUTH HIGUERA STREET, SUITE 102
SAN LUIS OBISPO, CA 93401

THE INCLUDED DRAWINGS, SPECIFICATIONS, IDEAS, DESIGNS AND ARRANGEMENTS REPRESENTED THEREBY ARE AND SHALL REMAIN THE PROPERTY OF RRM DESIGN GROUP AND NO PART THEREOF SHALL BE COPIED, DISCLOSED TO OTHERS OR USED IN CONNECTION WITH ANY WORK OR PROJECT OTHER THAN THE SPECIFIED PROJECT FOR WHICH THEY HAVE BEEN PREPARED AND DEVELOPED WITHOUT THE WRITTEN CONSENT OF RRM DESIGN GROUP. VISUAL CONTACT WITH THESE DRAWINGS OR SPECIFICATIONS SHALL CONSTITUTE CONCLUSIVE EVIDENCE OF ACCEPTANCE OF THESE RESTRICTIONS. SUBMITTAL OF THESE DOCUMENTS FOR PUBLIC AGENCY REVIEW SHALL NOT BE CONSIDERED A WAIVER OF RRM DESIGN GROUP'S RIGHTS.
RRM DESIGN GROUP COPYRIGHT 2024.
RRM IS A CALIFORNIA CORPORATION

LICENSED LANDSCAPE ARCHITECT
LANCE WIERSCHEM LIC. #6210
SIGNATURE
07.31.2026
EXPIRATION DATE
DATE
STATE OF CALIFORNIA

CONSULTANT

AGENCY

FOURTH ST COMMUNITY CENTER AND PARK
HENDERSON AVE., PORTERVILLE, CA 93257

IRRIGATION PLAN

NO.	REVISION	DATE
△		
△		
△		
△		
△		
△		

PROJECT MANAGER: LW
DRAWN BY: DK
CHECKED BY: LW
DATE: 2024.09.19
PROJECT NUMBER: 2883-01-RC22
SHEET: LI102

PLAN CHECK REVISION 2

N:\2800\2883-01-RC22-Porterville-Fourth-St-Park-Design\Landscape-Architecture\Task-L2-ConDocs\Sheet-Files\LI-2883-01.dwg, LI102, Sep 24, 2024 3:30pm, LDWierschem

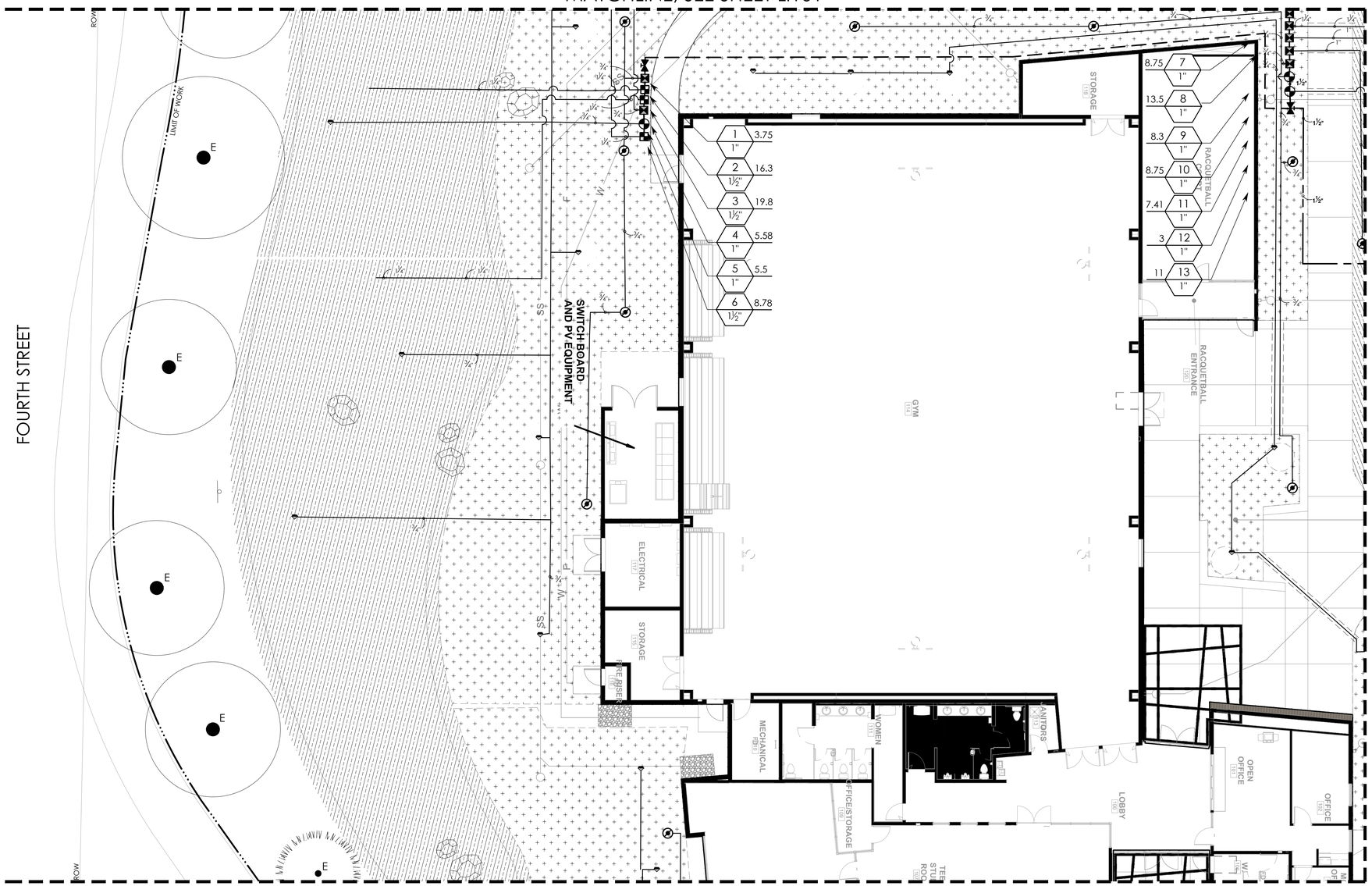

NOTES

1. LIMIT OF WORK DEPICTED IS APPROXIMATE. ACTUAL LIMIT OF WORK MAY VARY BASED ON FIELD CONDITIONS.
2. REFER TO SHEET LI001 FOR IRRIGATION SCHEDULE AND IRRIGATION NOTES.

0 5 10 20 30 feet
1"=10'

PLAN CHECK REVISION 2

rrm design group
rrmdesign.com | (805) 543-1794
3765 SOUTH HIGUERA STREET, SUITE 102
SAN LUIS OBISPO, CA 93401

THE INCLUDED DRAWINGS, SPECIFICATIONS, IDEAS, DESIGNS AND ARRANGEMENTS REPRESENTED THEREBY ARE AND SHALL REMAIN THE PROPERTY OF RRM DESIGN GROUP AND NO PART THEREOF SHALL BE COPIED, DISCLOSED TO OTHERS OR USED IN CONNECTION WITH ANY WORK OR PROJECT OTHER THAN THE SPECIFIED PROJECT FOR WHICH THEY HAVE BEEN PREPARED AND DEVELOPED WITHOUT THE WRITTEN CONSENT OF RRM DESIGN GROUP. VISUAL CONTACT WITH THESE DRAWINGS OR SPECIFICATIONS SHALL CONSTITUTE CONCLUSIVE EVIDENCE OF ACCEPTANCE OF THESE RESTRICTIONS. SUBMITTAL OF THESE DOCUMENTS FOR PUBLIC AGENCY REVIEW SHALL NOT BE CONSIDERED A WAIVER OF RRM DESIGN GROUP'S RIGHTS.
RRM DESIGN GROUP COPYRIGHT 2024.
RRM IS A CALIFORNIA CORPORATION

LICENSED LANDSCAPE ARCHITECT
LANCE WIERSCHEM LIC. #6210
SIGNATURE
07.31.2026
EXPIRATION DATE
DATE
STATE OF CALIFORNIA

CONSULTANT

AGENCY

FOURTH ST COMMUNITY CENTER AND PARK
HENDERSON AVE., PORTERVILLE, CA 93257

IRRIGATION PLAN

NO.	REVISION	DATE
△		
△		
△		
△		
△		
△		

PROJECT MANAGER: LW
DRAWN BY: DK
CHECKED BY: LW
DATE: 2024.09.19
PROJECT NUMBER: 2883-01-RC22
SHEET: LI103

N:\2800\2883-01-RC22-Porterville-Fourth-St-Park-Design\Landscape-Architecture\Task-L2-ConDocs\Sheet-Files\LI-2883-01.dwg, LI103, Sep 24, 2024 3:34pm, LDWierschem

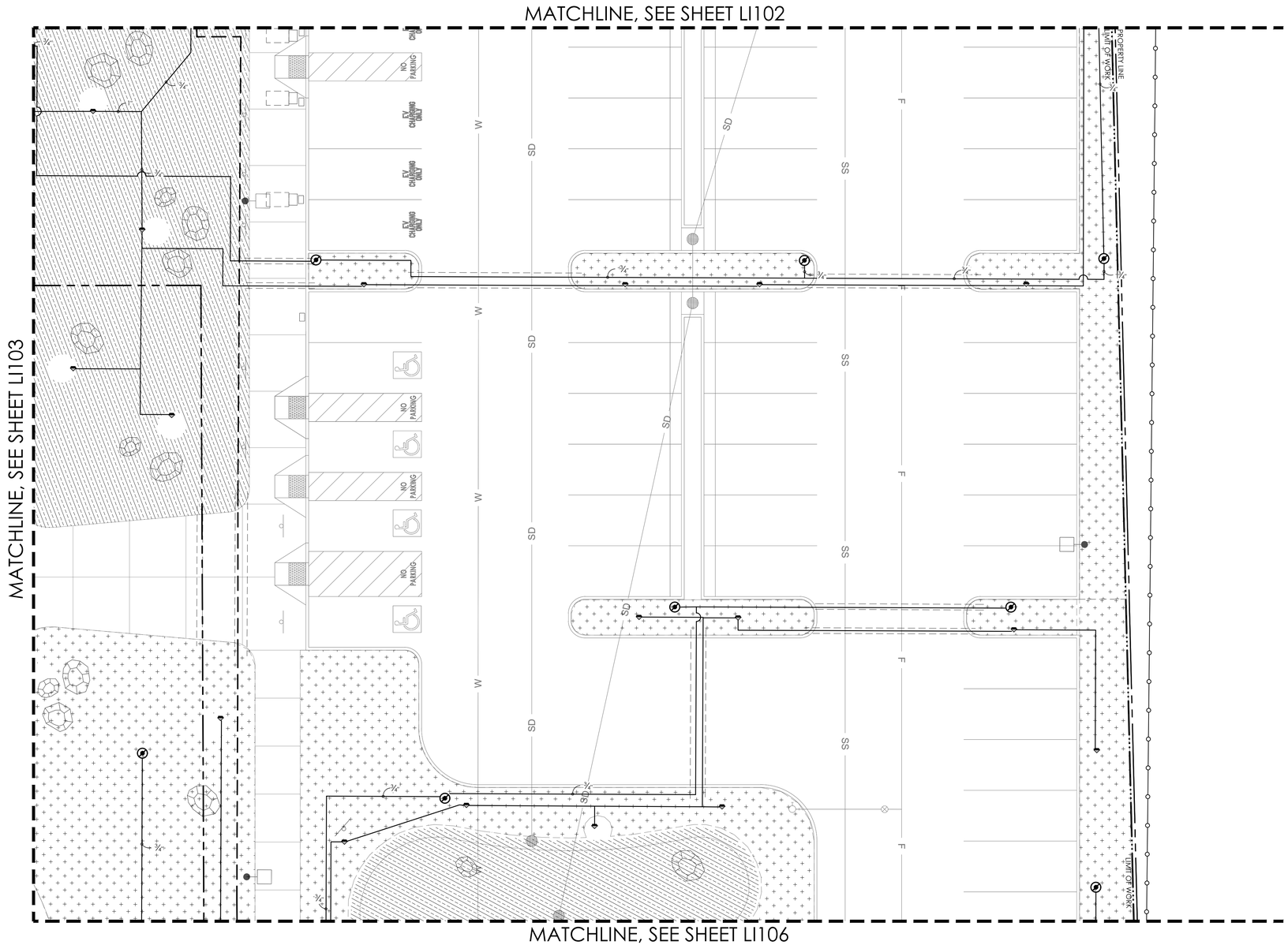

NOTES

1. LIMIT OF WORK DEPICTED IS APPROXIMATE. ACTUAL LIMIT OF WORK MAY VARY BASED ON FIELD CONDITIONS.
2. REFER TO SHEET LI001 FOR IRRIGATION SCHEDULE AND IRRIGATION NOTES.

0 5 10 20 30 feet
1"=10'

PLAN CHECK REVISION 2

rrm design group
rrmdesign.com | (805) 543-1794
3765 SOUTH HIGUERA STREET, SUITE 102
SAN LUIS OBISPO, CA 93401

THE INCLUDED DRAWINGS, SPECIFICATIONS, IDEAS, DESIGNS AND ARRANGEMENTS REPRESENTED THEREBY ARE AND SHALL REMAIN THE PROPERTY OF RRM DESIGN GROUP. THEY ARE NOT TO BE USED IN WHOLE OR IN PART FOR ANY PURPOSE NOT SPECIFIED IN CONNECTION WITH ANY WORK OR PROJECT OTHER THAN THE SPECIFIED PROJECT FOR WHICH THEY HAVE BEEN PREPARED AND DEVELOPED WITHOUT THE WRITTEN CONSENT OF RRM DESIGN GROUP. VISUAL CONTACT WITH THESE DRAWINGS AND SPECIFICATIONS SHALL CONSTITUTE PROOF OF ACCEPTANCE OF THE ABOVE RESTRICTIONS. SUBMITTAL OF THESE DOCUMENTS FOR PUBLIC AGENCY REVIEW SHALL NOT BE CONSIDERED A WAIVER OF RRM DESIGN GROUP'S RIGHTS.
RRM DESIGN GROUP COPYRIGHT 2024.
RRM IS A CALIFORNIA CORPORATION

LICENSED LANDSCAPE ARCHITECT
LANCE WIERSCHEM LIC. 4210
SIGNATURE
07.31.2026
RENEWAL DATE
DATE
STATE OF CALIFORNIA

CONSULTANT

AGENCY

FOURTH ST COMMUNITY CENTER AND PARK
HENDERSON AVE., PORTERVILLE, CA 93257

IRRIGATION PLAN

NO.	REVISION	DATE
△		
△		
△		
△		
△		
△		

PROJECT MANAGER LW
DRAWN BY DK
CHECKED BY LW
DATE 2024.09.19
PROJECT NUMBER 2883-01-RC22
SHEET LI104

N:\2800\2883-01-RC22-Porterville-Fourth-St-Park-Design\Landscape-Architecture\Task-L2-ConDocs\Sheet-Files\LI-2883-01.dwg, LI104, Sep 24, 2024 3:38pm, LDWierschem

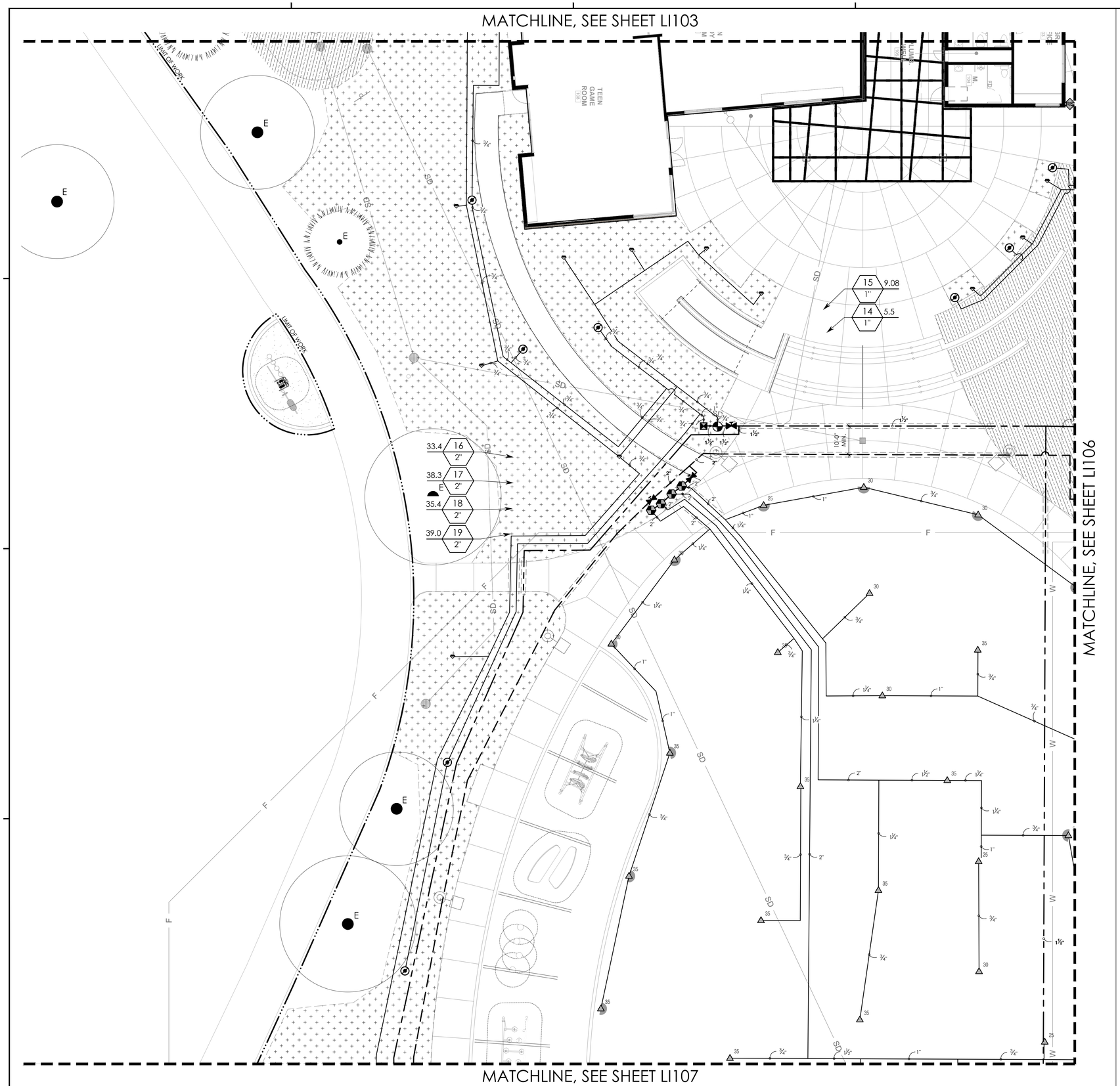

NOTES

1. LIMIT OF WORK DEPICTED IS APPROXIMATE. ACTUAL LIMIT OF WORK MAY VARY BASED ON FIELD CONDITIONS.
2. REFER TO SHEET LI001 FOR IRRIGATION SCHEDULE AND IRRIGATION NOTES.

0 5 10 20 30 feet
1"=10'

PLAN CHECK REVISION 2

rrm design group
rrmdesign.com | (805) 543-1794
3765 SOUTH HIGUERA STREET, SUITE 102
SAN LUIS OBISPO, CA 93401

THE INCLUDED DRAWINGS, SPECIFICATIONS, IDEAS, DESIGNS AND ARRANGEMENTS REPRESENTED THEREBY ARE AND SHALL REMAIN THE PROPERTY OF RRM DESIGN GROUP AND NO PART THEREOF SHALL BE COPIED, DISCLOSED TO OTHERS OR USED IN CONNECTION WITH ANY WORK OR PROJECT OTHER THAN THE SPECIFIED PROJECT FOR WHICH THEY HAVE BEEN PREPARED AND DEVELOPED WITHOUT THE WRITTEN CONSENT OF RRM DESIGN GROUP. VISUAL CONTACT WITH THESE DRAWINGS OR SPECIFICATIONS SHALL CONSTITUTE CONCLUSIVE EVIDENCE OF ACCEPTANCE OF THESE RESTRICTIONS. SUBMITTAL OF THESE DOCUMENTS FOR PUBLIC AGENCY REVIEW SHALL NOT BE CONSIDERED A WAIVER OF RRM DESIGN GROUP'S RIGHTS.
RRM DESIGN GROUP COPYRIGHT 2024.
RRM IS A CALIFORNIA CORPORATION

LICENSED LANDSCAPE ARCHITECT
LANCE WIERSCHEM LIC. #6210
SIGNATURE
07.31.2026
EXPIRATION DATE
DATE
STATE OF CALIFORNIA

CONSULTANT

AGENCY

FOURTH ST COMMUNITY CENTER AND PARK
HENDERSON AVE., PORTERVILLE, CA 93257

IRRIGATION PLAN

NO.	REVISION	DATE
△		
△		
△		
△		
△		
△		

PROJECT MANAGER: LW
DRAWN BY: DK
CHECKED BY: LW
DATE: 2024.09.19
PROJECT NUMBER: 2883-01-RC22
SHEET: LI105

N:\2800\2883-01-RC22-Porterville-Fourth-St-Park-Design\Landscape-Architecture\Task-L2-ConDocs\Sheet-Files\LI-2883-01.dwg, LI105, Sep 24, 2024 3:42pm, LDWierschem

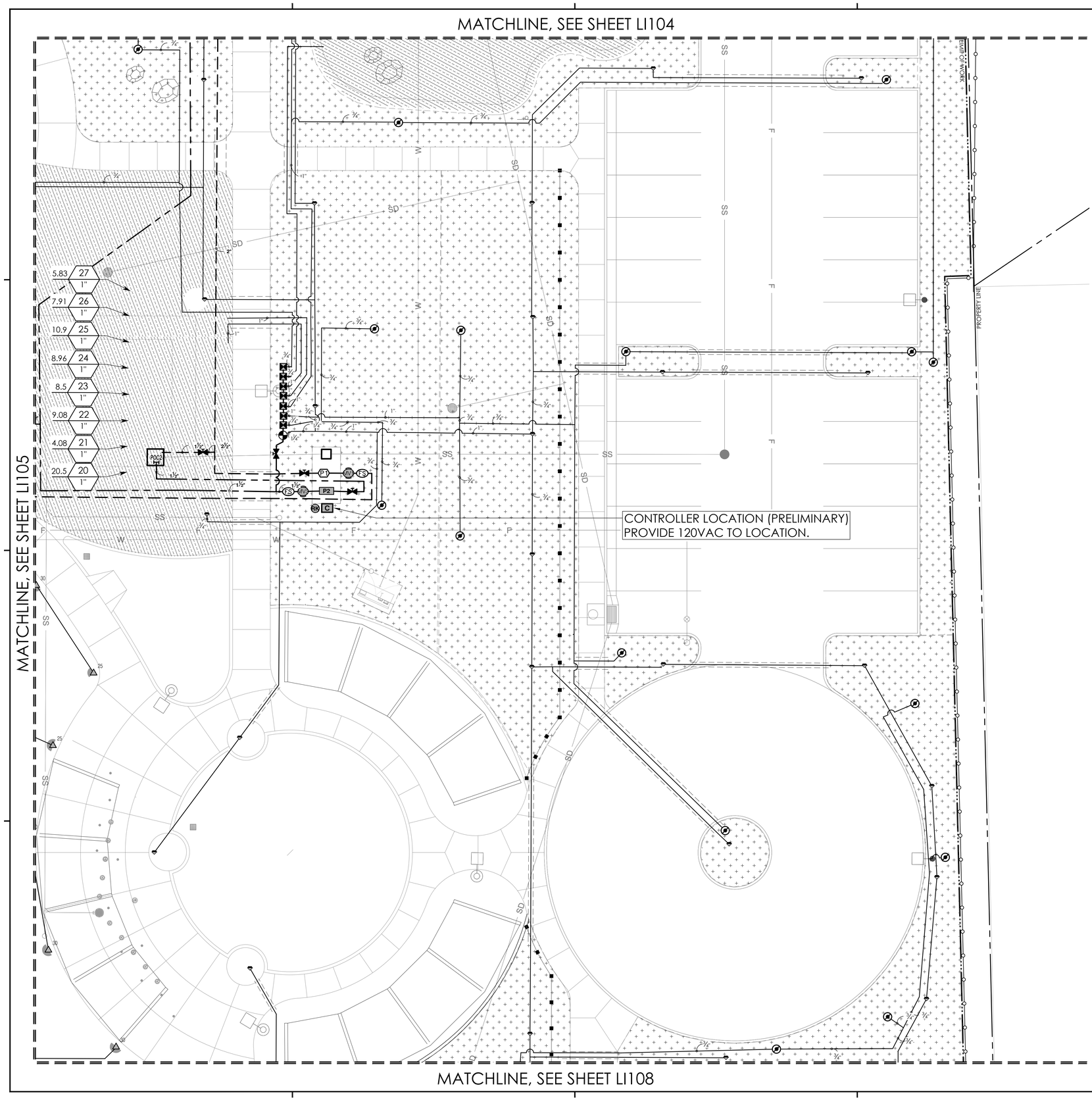

NOTES

1. LIMIT OF WORK DEPICTED IS APPROXIMATE. ACTUAL LIMIT OF WORK MAY VARY BASED ON FIELD CONDITIONS.
2. REFER TO SHEET LI001 FOR IRRIGATION SCHEDULE AND IRRIGATION NOTES.

0 5 10 20 30 feet
1"=10'

PLAN CHECK REVISION 2

rrm design group
rrmdesign.com | (805) 543-1794
3765 SOUTH HIGUERA STREET, SUITE 102
SAN LUIS OBISPO, CA 93401

THE INCLUDED DRAWINGS, SPECIFICATIONS, IDEAS, DESIGNS AND ARRANGEMENTS REPRESENTED THEREON ARE AND SHALL REMAIN THE PROPERTY OF RRM DESIGN GROUP. THEY ARE NOT TO BE USED IN WHOLE OR IN PART FOR ANY PURPOSE NOT SPECIFIED IN CONNECTION WITH ANY WORK OR PROJECT OTHER THAN THE SPECIFIED PROJECT FOR WHICH THEY HAVE BEEN PREPARED AND DEVELOPED WITHOUT THE WRITTEN CONSENT OF RRM DESIGN GROUP. VISUAL CONTACT WITH THESE DRAWINGS AND SPECIFICATIONS SHALL CONSTITUTE PROOF OF ACCEPTANCE OF THE ABOVE RESTRICTIONS. SUBMITTAL OF THESE DOCUMENTS FOR PUBLIC AGENCY REVIEW SHALL NOT BE CONSIDERED A WAIVER OF RRM DESIGN GROUP'S RIGHTS.
RRM DESIGN GROUP COPYRIGHT 2024.
RRM IS A CALIFORNIA CORPORATION

LICENSED LANDSCAPE ARCHITECT
LANCE WIERSCHEM LIC. 4210
SIGNATURE
07.31.2026
EXPIRATION DATE
STATE OF CALIFORNIA

CONSULTANT

AGENCY

FOURTH ST COMMUNITY CENTER AND PARK
HENDERSON AVE., PORTERVILLE, CA 93257

IRRIGATION PLAN

NO.	REVISION	DATE

PROJECT MANAGER LW
DRAWN BY DK
CHECKED BY LW
DATE 2024.09.19
PROJECT NUMBER 2883-01-RC22
SHEET LI106

N:\2800\2883-01-RC22-Porterville-Fourth-St-Park-Design\Landscape-Architecture\Task-L2-ConDocs\Sheet-Files\LI-2883-01.dwg, LI106, Sep 24, 2024 3:47pm, LDWierschem

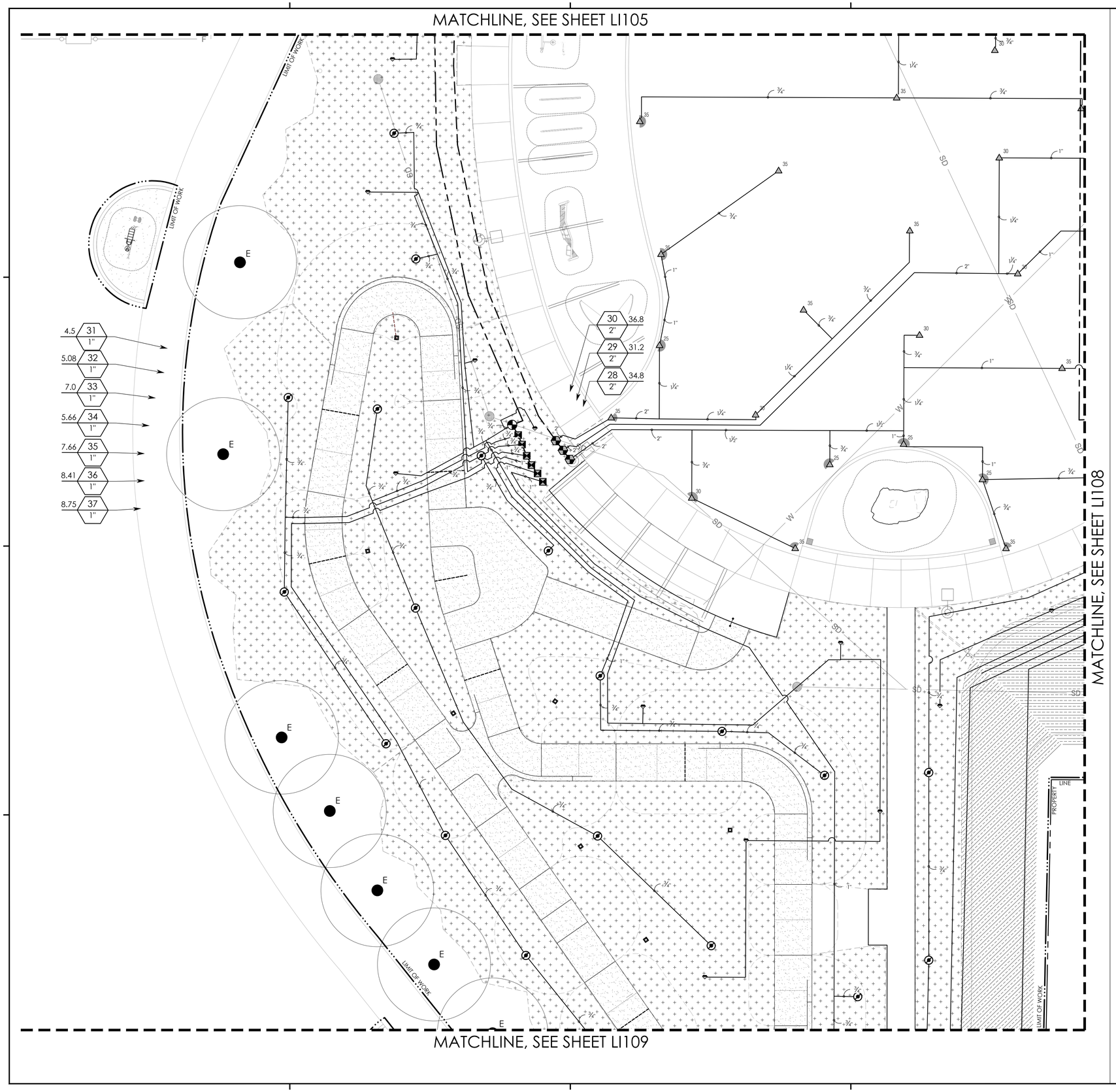

NOTES

1. LIMIT OF WORK DEPICTED IS APPROXIMATE. ACTUAL LIMIT OF WORK MAY VARY BASED ON FIELD CONDITIONS.
2. REFER TO SHEET LI001 FOR IRRIGATION SCHEDULE AND IRRIGATION NOTES.

0 5 10 20 30 feet
1"=10'

rrm design group
rrmdesign.com | (805) 543-1794
3765 SOUTH HIGUERA STREET, SUITE 102
SAN LUIS OBISPO, CA 93401

THE INCLUDED DRAWINGS, SPECIFICATIONS, IDEAS, DESIGNS AND ARRANGEMENTS REPRESENTED THEREBY ARE AND SHALL REMAIN THE PROPERTY OF RRM DESIGN GROUP AND NO PART THEREOF SHALL BE COPIED, DISCLOSED TO OTHERS OR USED IN CONNECTION WITH ANY WORK OR PROJECT OTHER THAN THE SPECIFIED PROJECT FOR WHICH THEY HAVE BEEN PREPARED AND DEVELOPED WITHOUT THE WRITTEN CONSENT OF RRM DESIGN GROUP. VISUAL CONTACT WITH THESE DRAWINGS OR SPECIFICATIONS SHALL CONSTITUTE CONCLUSIVE EVIDENCE OF ACCEPTANCE OF THESE RESTRICTIONS. SUBMITTAL OF THESE DOCUMENTS FOR PUBLIC AGENCY REVIEW SHALL NOT BE CONSIDERED A WAIVER OF RRM DESIGN GROUP'S RIGHTS.
RRM DESIGN GROUP COPYRIGHT 2024.
RRM IS A CALIFORNIA CORPORATION

LICENSED LANDSCAPE ARCHITECT
LANCE WIERSCHEM LIC. #6210
SIGNATURE
07.31.2026
EXPIRATION DATE
DATE
STATE OF CALIFORNIA

CONSULTANT

AGENCY

FOURTH ST COMMUNITY CENTER AND PARK
HENDERSON AVE., PORTERVILLE, CA 93257

IRRIGATION PLAN

NO.	REVISION	DATE
△		
△		
△		
△		
△		
△		

PROJECT MANAGER: LW
DRAWN BY: DK
CHECKED BY: LW
DATE: 2024.09.19
PROJECT NUMBER: 2883-01-RC22
SHEET: LI107

PLAN CHECK REVISION 2

N:\2800\2883-01-RC22-Porterville-Fourth-St-Park-Design\Landscape-Architecture\Task-L2-ConDocs\Sheet-Files\LI-2883-01.dwg, LI107, Sep 24, 2024 3:51pm, LDWierschem

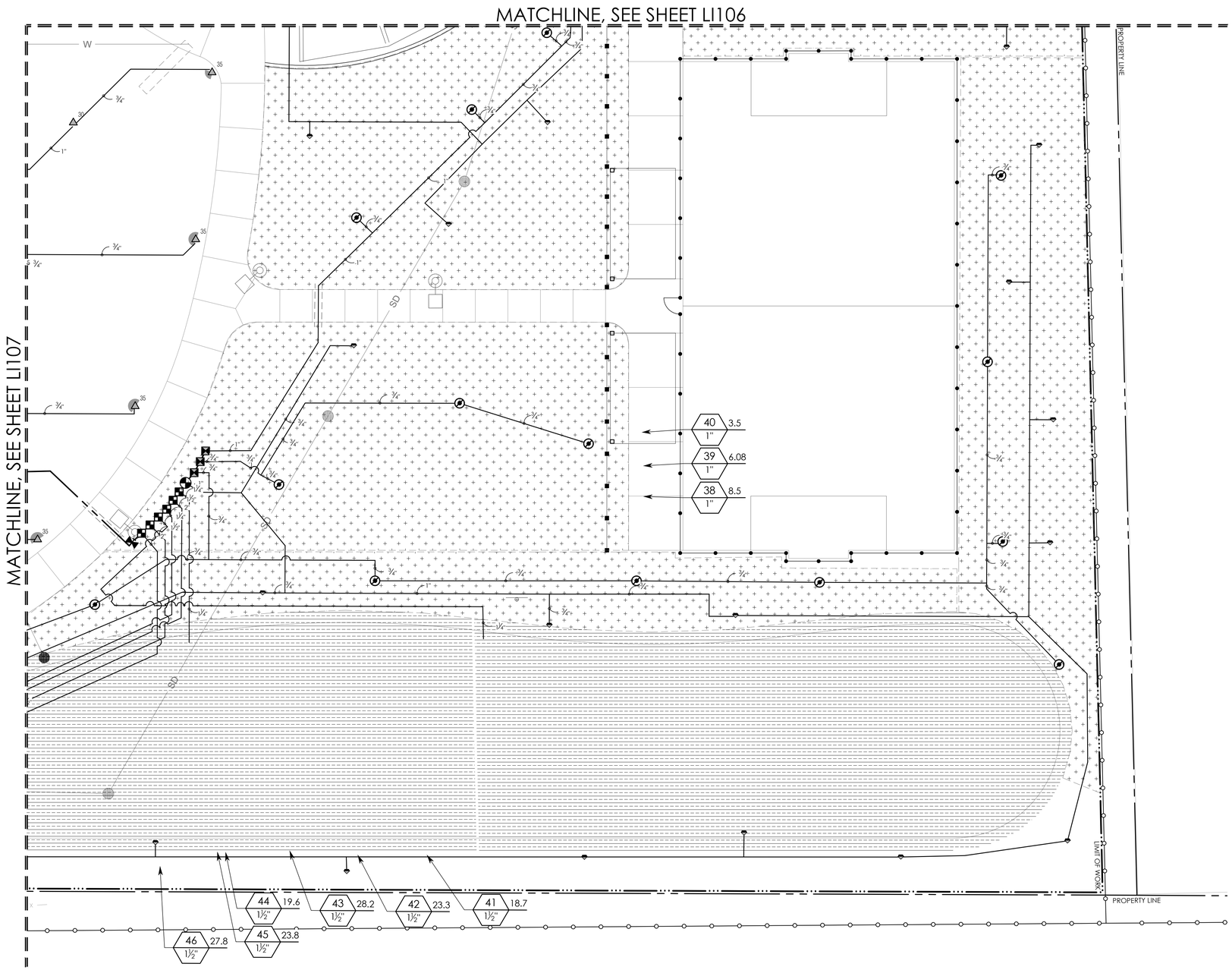

NOTES

1. LIMIT OF WORK DEPICTED IS APPROXIMATE. ACTUAL LIMIT OF WORK MAY VARY BASED ON FIELD CONDITIONS.
2. REFER TO SHEET LI001 FOR IRRIGATION SCHEDULE AND IRRIGATION NOTES.

0 5 10 20 30 feet
1"=10'

PLAN CHECK REVISION 2

rrm design group
rrmdesign.com | (805) 543-1794
3765 SOUTH HIGUERA STREET, SUITE 102
SAN LUIS OBISPO, CA 93401

THE INCLUDED DRAWINGS, SPECIFICATIONS, IDEAS, DESIGNS AND ARRANGEMENTS REPRESENTED THEREBY ARE AND SHALL REMAIN THE PROPERTY OF RRM DESIGN GROUP AND NO PART THEREOF SHALL BE COPIED, DISCLOSED TO OTHERS OR USED IN CONNECTION WITH ANY WORK OR PROJECT OTHER THAN THE SPECIFIED PROJECT FOR WHICH THEY HAVE BEEN PREPARED AND DEVELOPED WITHOUT THE WRITTEN CONSENT OF RRM DESIGN GROUP. VISUAL CONTACT WITH THESE DRAWINGS OR SPECIFICATIONS SHALL CONSTITUTE CONCLUSIVE EVIDENCE OF ACCEPTANCE OF THESE RESTRICTIONS. SUBMITTAL OF THESE DOCUMENTS FOR PUBLIC AGENCY REVIEW SHALL NOT BE CONSIDERED A WAIVER OF RRM DESIGN GROUP'S RIGHTS.
RRM DESIGN GROUP COPYRIGHT 2024.
RRM IS A CALIFORNIA CORPORATION

LICENSED LANDSCAPE ARCHITECT
LANCE WIERSCHEM LIC. #6210
SIGNATURE
07.31.2026
EXPIRATION DATE
DATE
STATE OF CALIFORNIA

CONSULTANT

AGENCY

FOURTH ST COMMUNITY CENTER AND PARK
HENDERSON AVE., PORTERVILLE, CA 93257

IRRIGATION PLAN

NO.	REVISION	DATE
△		
△		
△		
△		
△		
△		

PROJECT MANAGER
LW
DRAWN BY
DK
CHECKED BY
LW
DATE
2024.09.19
PROJECT NUMBER
2883-01-RC22
SHEET
LI108

N:\2800\2883-01-RC22-Porterville-Fourth-St-Park-Design\Landscape-Architecture\Task-L2-ConDocs\Sheet-Files\LI-2883-01.dwg, LI108, Sep 24, 2024 3:56pm, LDWierschem

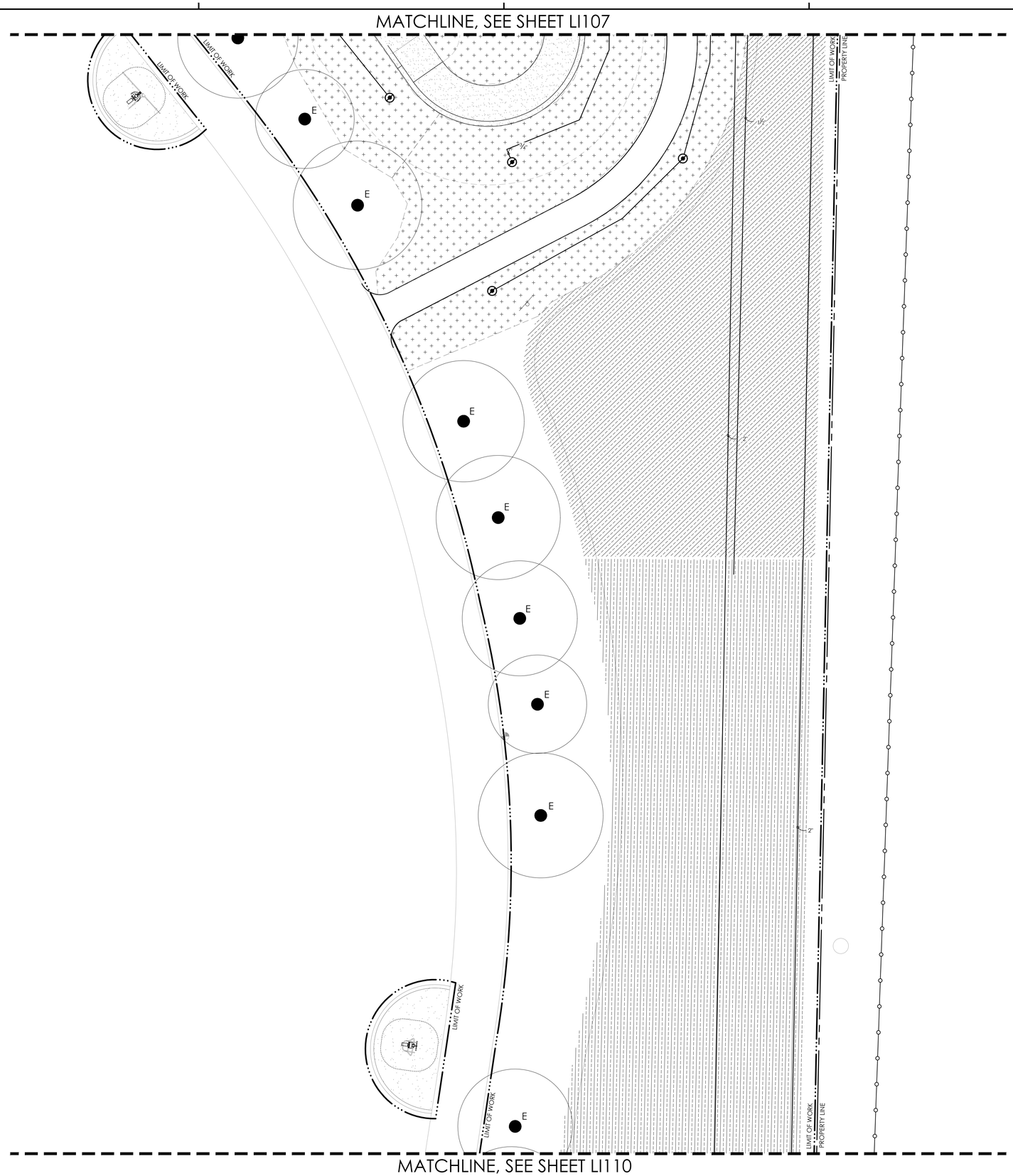

NOTES

1. LIMIT OF WORK DEPICTED IS APPROXIMATE. ACTUAL LIMIT OF WORK MAY VARY BASED ON FIELD CONDITIONS.
2. REFER TO SHEET LI001 FOR IRRIGATION SCHEDULE AND IRRIGATION NOTES.

0 5 10 20 30 feet

1"=10'

PLAN CHECK REVISION 2

rrm design group

rrmdesign.com | (805) 543-1794
3765 SOUTH HIGUERA STREET, SUITE 102
SAN LUIS OBISPO, CA 93401

THE INCLUDED DRAWINGS, SPECIFICATIONS, IDEAS, DESIGNS AND ARRANGEMENTS REPRESENTED THEREBY ARE AND SHALL REMAIN THE PROPERTY OF RRM DESIGN GROUP AND NO PART THEREOF SHALL BE COPIED, DISCLOSED TO OTHERS OR USED IN CONNECTION WITH ANY WORK OR PROJECT OTHER THAN THE SPECIFIED PROJECT FOR WHICH THEY HAVE BEEN PREPARED AND DEVELOPED WITHOUT THE WRITTEN CONSENT OF RRM DESIGN GROUP. VISUAL CONTACT WITH THESE DRAWINGS OR SPECIFICATIONS SHALL CONSTITUTE CONCLUSIVE EVIDENCE OF ACCEPTANCE OF THESE RESTRICTIONS. SUBMITTAL OF THESE DOCUMENTS FOR PUBLIC AGENCY REVIEW SHALL NOT BE CONSIDERED A WAIVER OF RRM DESIGN GROUP'S RIGHTS.

RRM DESIGN GROUP COPYRIGHT 2024.
RRM IS A CALIFORNIA CORPORATION

LICENSED LANDSCAPE ARCHITECT
LANCE WIERSCHEM LIC. #6210
SIGNATURE
07.31.2026
EXPIRATION DATE
DATE
STATE OF CALIFORNIA

CONSULTANT

AGENCY

FOURTH ST COMMUNITY CENTER AND PARK
HENDERSON AVE., PORTERVILLE, CA 93257

IRRIGATION PLAN

NO.	REVISION	DATE
△		
△		
△		
△		
△		
△		

PROJECT MANAGER
LW

DRAWN BY
DK

CHECKED BY
LW

DATE
2024.09.19

PROJECT NUMBER
2883-01-RC22

SHEET
LI109

N:\2800\2883-01-RC22-Porterville-Fourth-St-Park-Design\Landscape-Architecture\Task-L2-ConDocs\Sheet-Files\LI-2883-01.dwg, LI109, Sep 24, 2024 4:00pm, LDWierschem

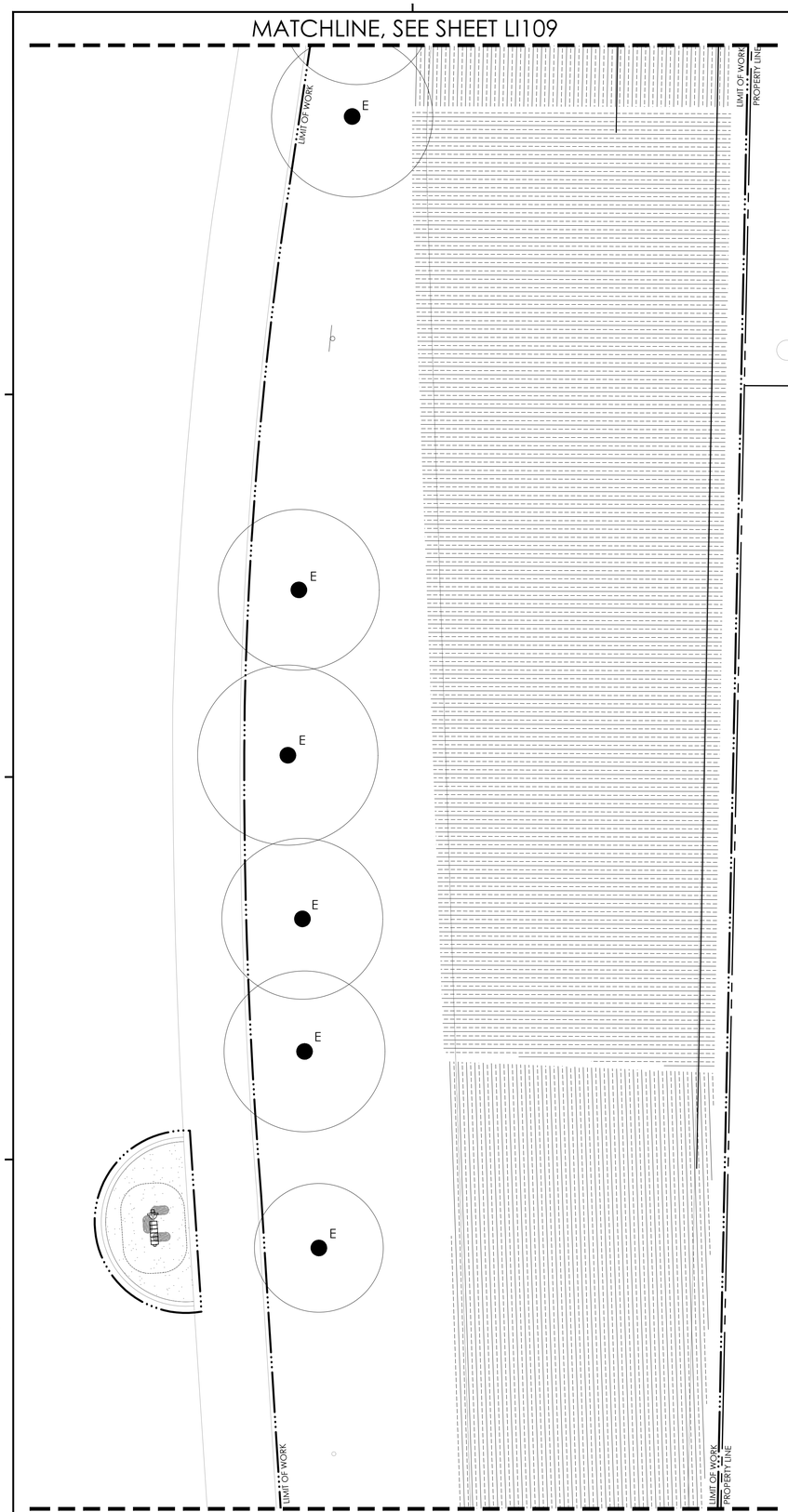

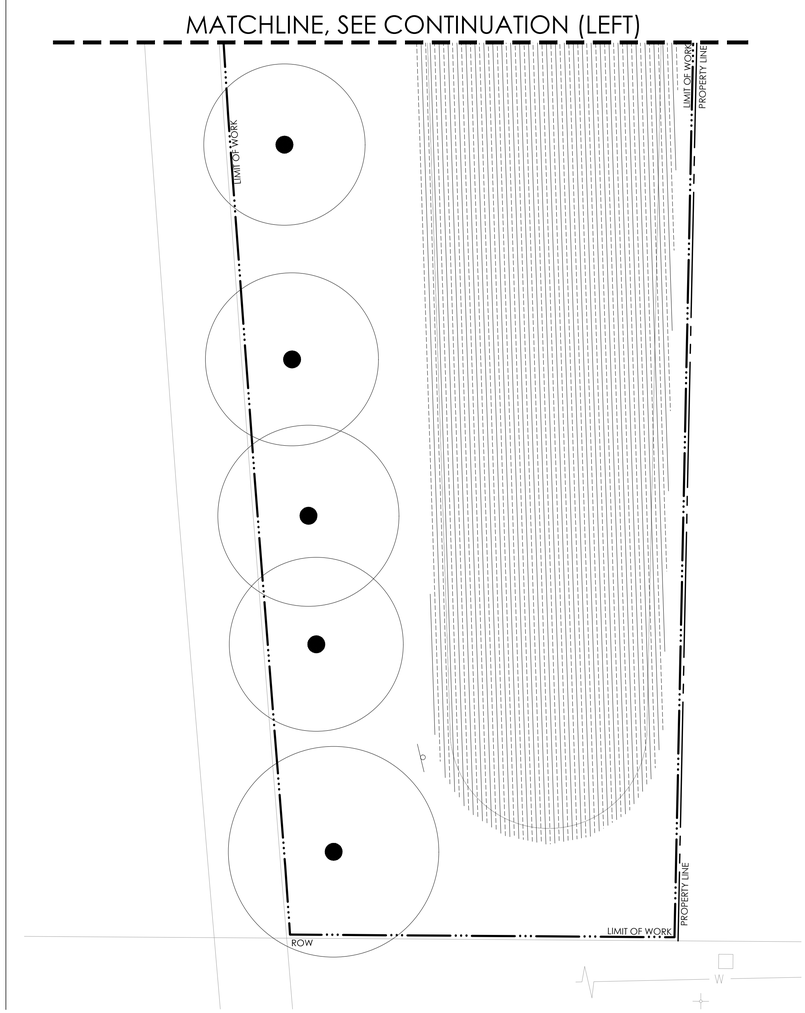

NOTES

1. LIMIT OF WORK DEPICTED IS APPROXIMATE. ACTUAL LIMIT OF WORK MAY VARY BASED ON FIELD CONDITIONS.
2. REFER TO SHEET LI001 FOR IRRIGATION SCHEDULE AND IRRIGATION NOTES.

0 5 10 20 30 feet
1"=10'

rrm design group
rrmdesign.com | (805) 543-1794
3765 SOUTH HIGUERA STREET, SUITE 102
SAN LUIS OBISPO, CA 93401

THE INCLUDED DRAWINGS, SPECIFICATIONS, IDEAS, DESIGNS AND ARRANGEMENTS REPRESENTED THEREBY ARE AND SHALL REMAIN THE PROPERTY OF RRM DESIGN GROUP AND NO PART THEREOF SHALL BE COPIED, DISCLOSED TO OTHERS OR USED IN CONNECTION WITH ANY WORK OR PROJECT OTHER THAN THE SPECIFIED PROJECT FOR WHICH THEY HAVE BEEN PREPARED AND DEVELOPED WITHOUT THE WRITTEN CONSENT OF RRM DESIGN GROUP. VISUAL CONTACT WITH THESE DRAWINGS OR SPECIFICATIONS SHALL CONSTITUTE CONCLUSIVE EVIDENCE OF ACCEPTANCE OF THESE RESTRICTIONS. SUBMITTAL OF THESE DOCUMENTS FOR PUBLIC AGENCY REVIEW SHALL NOT BE CONSIDERED A WAIVER OF RRM DESIGN GROUP'S RIGHTS.
RRM DESIGN GROUP COPYRIGHT 2024.
RRM IS A CALIFORNIA CORPORATION

LICENSED LANDSCAPE ARCHITECT
LANCE WIERSCHEM LIC. #3210
SIGNATURE
07.31.2026
EXPIRATION DATE
DATE
STATE OF CALIFORNIA

CONSULTANT

AGENCY

FOURTH ST COMMUNITY CENTER AND PARK
HENDERSON AVE., PORTERVILLE, CA 93257

IRRIGATION PLAN

NO.	REVISION	DATE
△		
△		
△		
△		
△		
△		

PROJECT MANAGER: LW
DRAWN BY: DK
CHECKED BY: LW
DATE: 2024.09.19
PROJECT NUMBER: 2883-01-RC22
SHEET: LI110

PLAN CHECK REVISION 2

N:\2800\2883-01-RC22-Porterville-Fourth-St-Park-Design\Landscape-Architecture\Task-L2-ConDocs\Sheet-Files\LI-2883-01.dwg, LI110, Sep 24, 2024 4:11pm, LDWierschem

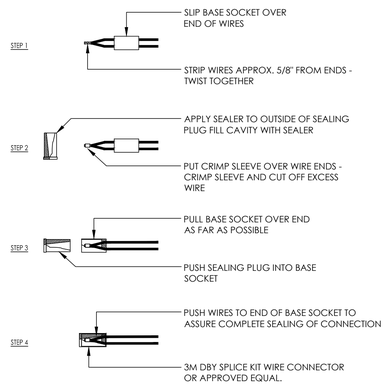

12 WIRING CONNECTIONS

1 1/2" = 1'-0" RRM-2800-2883.01-41

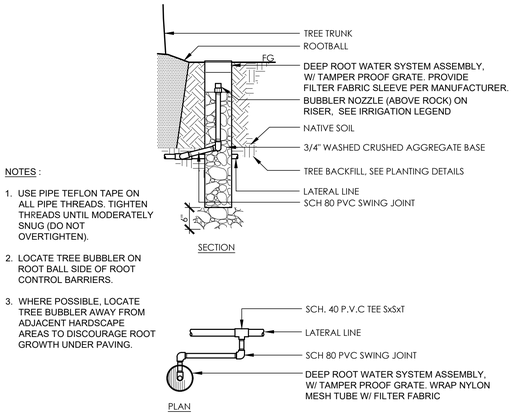

NOTES :

1. USE PIPE TEFLON TAPE ON ALL PIPE THREADS. TIGHTEN THREADS UNTIL MODERATELY SNUG (DO NOT OVERTIGHTEN).
2. LOCATE TREE BUBBLER ON ROOT BALL SIDE OF ROOT CONTROL BARRIERS.
3. WHERE POSSIBLE, LOCATE TREE BUBBLER AWAY FROM ADJACENT HARDSCAPE AREAS TO DISCOURAGE ROOT GROWTH UNDER PAVING.

9 DEEP ROOT TREE BUBBLER

3/4" = 1'-0" RRM-2800-2883.01-87

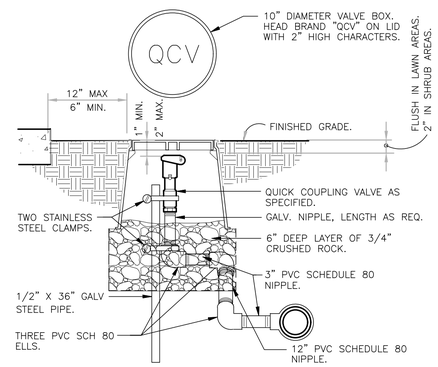

6 QUICK COUPLING VALVE IN BOX

1 1/2" = 1'-0" RRM-2800-2883.01-84

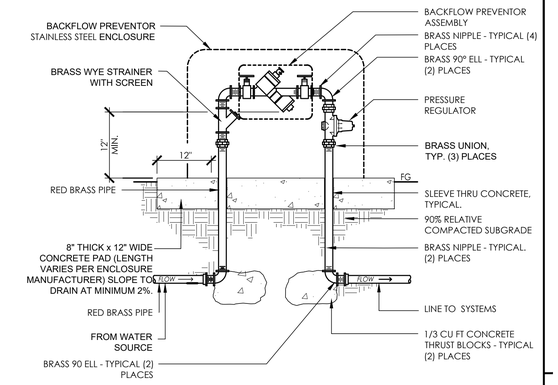

NOTES:
1. EQUIPMENT TO BE INSTALLED AT A MINIMUM OF 24" FROM ANY STRUCTURES OR HARDSCAPING.
2. WHEN UNIT IS NEXT TO A STRUCTURE (ie. WALL, BUILDING, ETC.) MOUNT TEST COCKS ON OPEN OR NON-STRUCTURE SIDE.

3 BACKFLOW PREVENTER WITH STEEL ENCLOSURE

1 1/2" = 1'-0" RRM-2800-2883.01-64

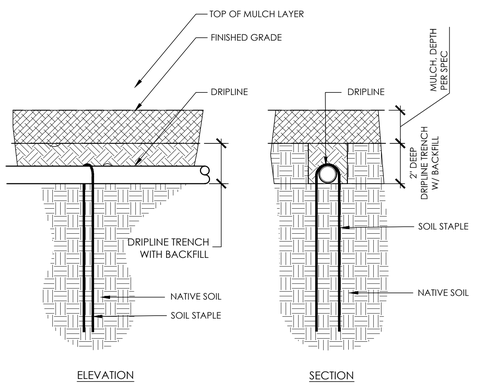

11 DRIPLINE STAKING

3/8" = 1'-0" RRM-2800-2883.01-90

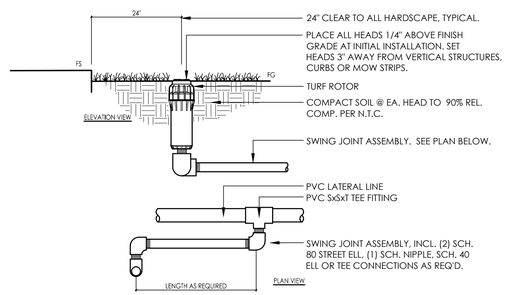

NOTES:

1. ALL PIPE THREADS ON SWING JOINT SHALL BE COATED WITH RECTORSEAL T PLUS 2 TEFLON PIPE COMPOUND OR APPROVED EQUAL BEFORE ASSEMBLY. DO NOT USE PIPE COMPOUND AND TAPE ON SWING JOINT THREADS. TIGHTEN THREADS UNTIL MODERATELY SNUG, DO NOT OVERTIGHTEN THREADS.
2. SIZE THE SWING JOINT USING THE FOLLOWING CRITERIA:
   - USE A 3/4" SIZE FOR A ROTOR WITH FLOWS LESS THAN 8 GPM.
   - USE A 1" SIZE FOR A ROTOR WITH FLOWS BETWEEN 8 - 11 GPM.
   - USE A 1 1/2" SIZE FOR A ROTOR WITH FLOWS GREATER THAN 11 GPM.

8 POP-UP ROTOR

1 1/2" = 1'-0" RRM-2800-2883.01-86

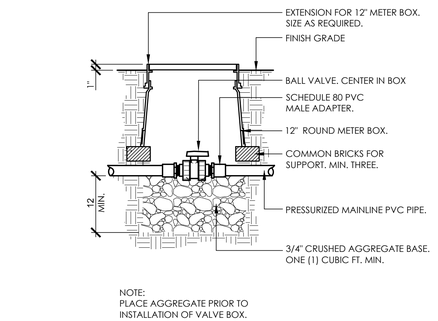

NOTE:
PLACE AGGREGATE PRIOR TO INSTALLATION OF VALVE BOX.

5 BALL VALVE

1" = 1'-0" RRM-ZU-96

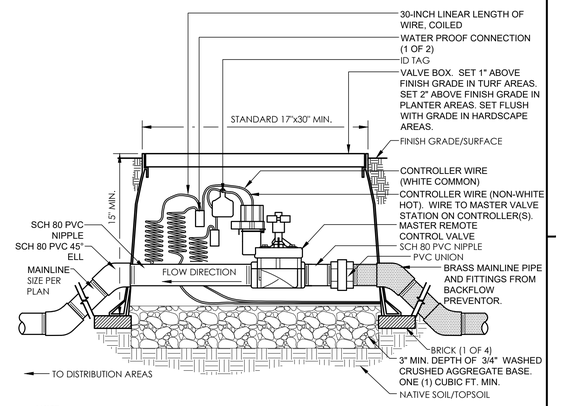

NOTE:
PLACE AGGREGATE PRIOR TO INSTALLATION OF VALVE BOX.

2 MASTER VALVE

3/4" = 1'-0" RRM-2800-2883.01-50

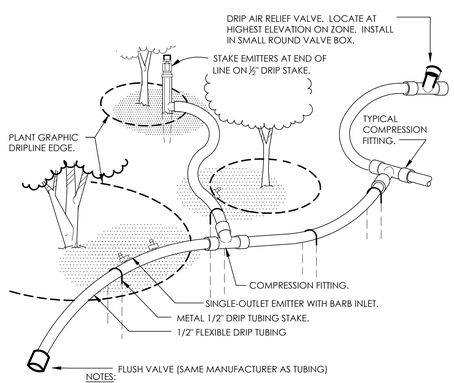

NOTES:
A. PLACE EMITTERS ¾ BETWEEN THE TRUNK AND OUTER DRIPLINE.
B. EVENLY SPACE EMITTERS AROUND PLANT.
C. STAKE THE DRIP TUBING AT EACH TEE, ELL, COUPLER, AT EACH EMITTER OR TRANSFER, AND AT 6'-0" MAX O.C.
D. 1/4" 'SPAGHETTI' TUBING IS NOT PERMITTED.
E. SEE SCHEDULE FOR NUMBER OF EMITTERS PER PLANT.

10 TYPICAL DRIP TUBING LAYOUT

1 1/2" = 1'-0" RRM-2800-2883.01-65

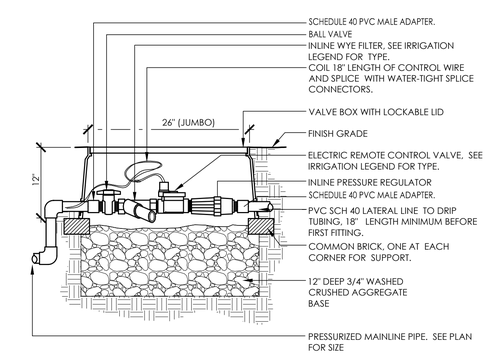

7 DRIP ZONE CONTROL VALVE

1/2" = 1'-0" RRM-2800-2883.01-69

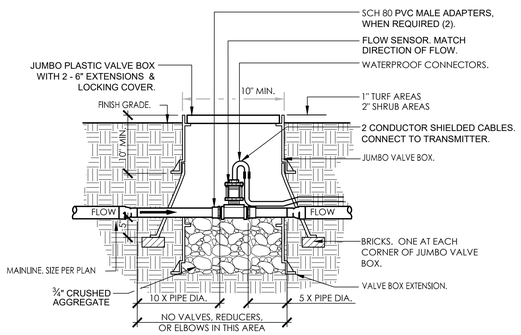

NOTES:
1. CONTRACTOR SHALL WIRE FLOW SENSOR TO IRRIGATION CONTROLLER IF CONTROLLER ALLOWS.
2. FLOW SENSOR MAKE AND MODEL SHALL BE COMPATIBLE WITH IRRIGATION CONTROLLER.

4 FLOW SENSOR

3/4" = 1'-0" RRM-2800-2883.01-07

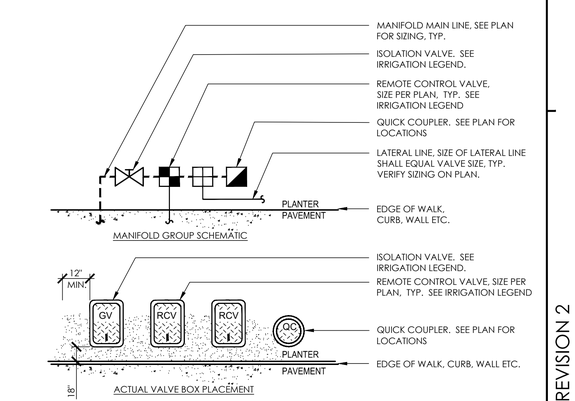

NOTES:

A. ALL VALVES SHALL BE RUN OFF A MANIFOLD GROUP SIMILAR TO THAT SHOWN IN ABOVE DIAGRAM.
B. ALL BOXES SHALL BE SQUARE TO ONE ANOTHER, AND TO EDGES OF ADJACENT FIXED OBJECTS.
C. ALL VALVE BOXES SHALL BE SET 2" ABOVE FINISH GRADE.
D. SEE IRRIGATION PLAN FOR MAINLINE PIPE SIZING.

1 VALVE BOX LAYOUT IN PLANTERS

3/8" = 1'-0" RRM-2800-2883.01-03

rrm design group
rrmdesign.com | (805) 543-1794
3765 SOUTH HIGUERA STREET, SUITE 102
SAN LUIS OBISPO, CA 93401

THE INCLUDED DRAWINGS, SPECIFICATIONS, IDEAS, DESIGNS AND ARRANGEMENTS REPRESENTED THEREBY ARE AND SHALL REMAIN THE PROPERTY OF RRM DESIGN GROUP. THEY ARE NOT TO BE USED IN WHOLE OR IN PART FOR ANY PURPOSE NOT AGREED IN CONNECTION WITH ANY WORK OR PROJECT. DESIGN THEREIN IS FOR PROJECT FOR WHICH THEY HAVE BEEN PREPARED AND DEVELOPED WITHOUT THE WRITTEN CONSENT OF RRM DESIGN GROUP. VISUAL CONTACT WITH THESE DRAWINGS AND SPECIFICATIONS SHALL CONSTITUTE PROOF OF ACCEPTANCE OF THE ABOVE RESTRICTIONS. SUBMITTAL OF THESE DOCUMENTS FOR PUBLIC AGENCY REVIEW SHALL NOT BE CONSIDERED A WAIVER OF RRM DESIGN GROUP'S RIGHTS.
RRM DESIGN GROUP COPYRIGHT 2024.
RRM IS A CALIFORNIA CORPORATION

LICENSED LANDSCAPE ARCHITECT
LANCE WIERSCHEM LIC. 4570
SIGNATURE
07.31.2024
EXPIRATION DATE
DATE
STATE OF CALIFORNIA

CONSULTANT

AGENCY

FOURTH ST COMMUNITY CENTER AND PARK

HENDERSON AVE., PORTERVILLE, CA 93257

IRRIGATION DETAILS

NO.	REVISION	DATE
△		
△		
△		
△		
△		
△		

PROJECT MANAGER: LW
DRAWN BY: DK
CHECKED BY: LW
DATE: 2024.09.19
PROJECT NUMBER: 2883-01-RC22
SHEET: LI501

PLAN CHECK REVISION 2

N:\2800\2883-01-RC22-Porterville-Fourth-St-Park-Design\Landscape-Architecture\Task-L2-ConDocs\Sheet-Files\LI-2883-01.dwg, LI501, Sep 24, 2024 4:12pm, LDWierschem

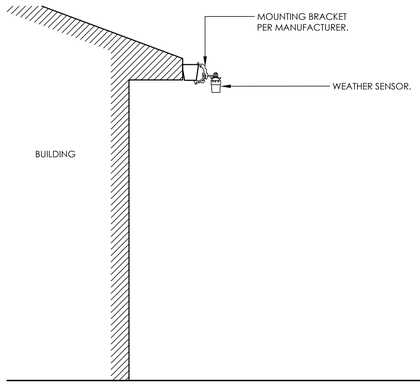

NOTES:

A. INSTALL WEATHER SENSOR CLEAR FROM OVERHEAD PROJECTIONS AT A MINIMUM ELEVATION OF 6' FROM THE GROUND. UTILIZE MANUFACTURER'S ACCESSORY CLIPS AND MOUNTING EQUIPMENT.
B. INSTALL WEATHER SENSOR WITHIN RANGE OF RECEIVER MODULE.

2 WIRELESS WEATHER SENSOR

1/2" = 1'-0" RRM-2800-2883.01-67

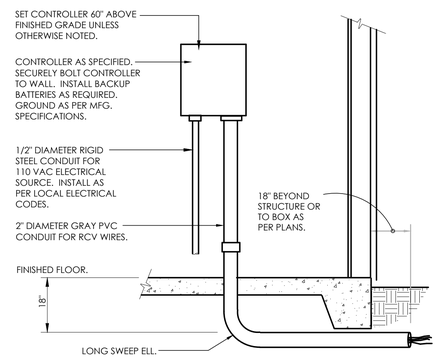

1 INTERIOR WALL MOUNT CONTROLLER

1" = 1'-0" RRM-2800-2883.01-09

rrm design group
rrmdesign.com | (805) 543-1794
3765 SOUTH HIGUERA STREET, SUITE 102
SAN LUIS OBISPO, CA 93401

THE INCLUDED DRAWINGS, SPECIFICATIONS, IDEAS, DESIGNS AND ARRANGEMENTS REPRESENTED THEREBY ARE AND SHALL REMAIN THE PROPERTY OF RRM DESIGN GROUP AND NO PART THEREOF SHALL BE COPIED, DISCLOSED TO OTHERS OR USED IN CONNECTION WITH ANY WORK OR PROJECT OTHER THAN THE SPECIFIED PROJECT FOR WHICH THEY HAVE BEEN PREPARED AND DEVELOPED WITHOUT THE WRITTEN CONSENT OF RRM DESIGN GROUP. VISUAL CONTACT WITH THESE DRAWINGS OR SPECIFICATIONS SHALL CONSTITUTE CONCLUSIVE EVIDENCE OF ACCEPTANCE OF THESE RESTRICTIONS. SUBMITTAL OF THESE DOCUMENTS FOR PUBLIC AGENCY REVIEW SHALL NOT BE CONSIDERED A WAIVER OF RRM DESIGN GROUP'S RIGHTS.
RRM DESIGN GROUP COPYRIGHT 2024.
RRM IS A CALIFORNIA CORPORATION

LICENSED LANDSCAPE ARCHITECT
LANCE WIERSCHEM LIC. #6210
SIGNATURE
07.31.2026
EXPIRATION DATE
DATE
STATE OF CALIFORNIA

CONSULTANT

AGENCY

FOURTH ST COMMUNITY CENTER AND PARK
HENDERSON AVE., PORTERVILLE, CA 93257

IRRIGATION DETAILS

NO.	REVISION	DATE
△		
△		
△		
△		
△		
△		

PROJECT MANAGER
LW
DRAWN BY: DK
CHECKED BY: LW
DATE
2024.09.19
PROJECT NUMBER
2883-01-RC22
SHEET
LI502

PLAN CHECK REVISION 2

N:\2800\2883-01-RC22-Porterville-Fourth-St-Park-Design\Landscape-Architecture\Task-L2-ConDocs\Sheet-Files\LI-2883-01.dwg, LI502, Sep 24, 2024 4:12pm, LDWierschem

PLANT SCHEDULE

SYMBOL	BOTANICAL NAME	COMMON NAME	CONT	WUCOLS	QTY
TREES					
	ARBUTUS 'MARINA' PER CITY OF PORTERVILLE STREET TREE LIST	STRAWBERRY TREE	36" BOX	LOW	6
	CEDRUS ATLANTICA 'GLAUCA' PER CITY OF PORTERVILLE STREET TREE LIST	BLUE ATLAS CEDAR	36" BOX	LOW	6
	CEDRUS DEODARA	DEODAR CEDAR	36" BOX	LOW	6
	CERCIDIUM X `DESERT MUSEUM` PER CITY OF PORTERVILLE STREET TREE LIST	DESERT MUSEUM PALO VERDE MULTI-TRUNK	36" BOX	VERY LOW	7
	PINUS ELDARICA PER CITY OF PORTERVILLE STREET TREE LIST	AFGHAN PINE	24" BOX	LOW	2
	PISTACIA CHINENSIS PER CITY OF PORTERVILLE STREET TREE LIST	CHINESE PISTACHE	24" BOX	LOW	11
	PLATANUS RACEMOSA	CALIFORNIA SYCAMORE	24" BOX	MODERATE	17
	PRUNUS CERASIFERA 'KRAUTER VESUVIUS' PER CITY OF PORTERVILLE STREET TREE LIST	KRAUTER VESUVIUS PURPLE-LEAF PLUM	24" BOX	MODERATE	24
	QUERCUS LOBATA PER CITY OF PORTERVILLE STREET TREE LIST	VALLEY OAK	36" BOX	LOW	2
	QUERCUS SUBER PER CITY OF PORTERVILLE STREET TREE LIST	CORK OAK	36" BOX	LOW	2
	SEARSIA LANCEA	AFRICAN SUMAC MULTI-TRUNK	24" BOX	LOW	11
	ULMUS WILSONIANA 'PROSPECTOR' PER CITY OF PORTERVILLE STREET TREE LIST	SIBERIAN ELM	36" BOX	LOW	13
	X CHITALPA TASHKENTENSIS 'PINK DAWN' PER CITY OF PORTERVILLE STREET TREE LIST	PINK DAWN CHITALPA MULTI-TRUNKED	36" BOX	LOW	18
	X CUPRESSOCYPARIS LEYLANDII PER CITY OF PORTERVILLE STREET TREE LIST	LEYLAND CYPRESS	24" BOX	LOW	5

SYMBOL	BOTANICAL NAME	COMMON NAME	CONT	WUCOLS	QTY
SHRUBS					
	ARCTOSTAPHYLOS X 'SUNSET'	SUNSET MANZANITA	5 GAL	LOW	35
	BACCHARIS PILULARIS 'PIGEON POINT'	PIGEON POINT COYOTE BRUSH	1 GAL	LOW	85
	BOUTELOUA GRACILIS 'BLONDE AMBITION'	BLUE GRAMA	1 GAL	LOW	322
	CAREX TUMULICOLA	FOOTHILL SEDGE	1 GAL	MODERATE	124
	CARPENTERIA CALIFORNICA	BUSH ANEMONE	5 GAL	LOW	7
	CEANOTHUS X 'CONCHA'	CONCHA WILD LILAC	5 GAL	LOW	22
	CHONDROPETALUM ELEPHANTINUM	LARGE CAPE RUSH	1 GAL	LOW	21
	CHONDROPETALUM TECTORUM 'EL CAMPO'	EL CAMPO CAPE RUSH	1 GAL	LOW	32
	CISTUS X 'SUNSET'	MAGENTA ROCKROSE	1 GAL	LOW	93
	DENDROMECON HARFORDII	BUSH POPPY	5 GAL	VERY LOW	11
	FEIJOA SELLOWIANA	PINEAPPLE GUAVA	15 GAL	LOW	12
	FREMONTODENDRON X 'KEN TAYLOR'	KEN TAYLOR FLANNEL BUSH	5 GAL	VERY LOW	15
	HESPERALOE PARVIFLORA	RED YUCCA	1 GAL	LOW	73
	HETEROMELES ARBUTIFOLIA	TOYON	15 GAL	VERY LOW	33
	JUNCUS PATENS 'ELK BLUE'	SPREADING RUSH	1 GAL	MODERATE	24
	LAURUS NOBILIS SHRUB/COLUMN FORM	SWEET BAY	24"BOX	LOW	6
	LOBELIA LAXIFLORA ANGUSTIFOLIA	MEXICAN LOBELIA	1 GAL	LOW	58
	MUHLENBERGIA DUBIA	PINE MUHLY	1 GAL	LOW	47
	MUHLENBERGIA RIGENS	DEER GRASS	1 GAL	LOW	126
	OLEA EUROPAEA 'MONTRA'	LITTLE OLLIE® OLIVE	5 GAL	LOW	68
	PEROVSKIA ATRIPLICIFOLIA 'BLUE SPIRE'	BLUE SPIRE RUSSIAN SAGE	1 GAL	LOW	11
	RHAMNUS CALIFORNICA	CALIFORNIA COFFEEBERRY	5 GAL	LOW	64
	ROSMARINUS OFFICINALIS 'HUNTINGTON CARPET'	DWARF ROSEMARY	1 GAL	LOW	148
	SALVIA LEUCOPHYLLA 'BEES BLISS'	BEE'S BLISS PURPLE SAGE	5 GAL	LOW	45

SYMBOL	BOTANICAL NAME	COMMON NAME	CONT	WUCOLS	SPACING	QTY
GROUND COVERS						
	BIORETENTION HYDROSEED	CA NATIVE BIOFILTER SEED MIX	HYDROSEED	LOW		40,139 SF
	BOUTELOUA GRACILIS 'BLONDE AMBITION'	BLONDE AMBITION BLUE GRAMA	1 GAL	LOW	36" o.c.	672
	CAREX PANSA	SAND DUNE SEDGE	PLUGS	MODERATE	12" o.c.	1,793
	TURF SOD	CELEBRATION BERMUDA GRASS	SOD	HIGH		29,436 SF

PLANTING NOTES

1. PLANT LIST IS FOR CONVENIENCE OF CONTRACTOR ONLY. IN CASE OF DISCREPANCIES BETWEEN THE PLANS AND THE LIST, PLANS SHALL PREVAIL.
2. PLANT LOCATIONS SHOWN ON THE PLANS ARE DIAGRAMMATIC. CONTRACTOR SHALL LOCATE ALL PLANT MATERIAL UNDER THE DIRECTION OF THE AUTHORIZED REPRESENTATIVE PRIOR TO PLANTING HOLE EXCAVATION.
3. THE AUTHORIZED REPRESENTATIVE RESERVES THE RIGHT TO MAKE SUBSTITUTIONS, ADDITIONS, AND DELETIONS TO THE PLANTING LAYOUT AS WORK PROGRESSES.
4. ALL GROUNDCOVER SHALL BE TRIANGULARLY SPACED UNLESS OTHERWISE NOTED.
5. CONTRACTOR SHALL INSTALL A 3-4 INCH LAYER OF MULCH IN ALL SHRUB PLANTING AREAS.
6. CONTRACTOR SHALL PROVIDE CONCRETE MOW CURB PER PLANS AND SPECIFICATIONS BETWEEN ALL TURF AND GROUNDCOVER SHRUB AREAS UNLESS OTHERWISE NOTED.

rrm design group
rrmdesign.com | (805) 543-1794
3765 SOUTH HIGUERA STREET, SUITE 102
SAN LUIS OBISPO, CA 93401

THE INCLUDED DRAWINGS, SPECIFICATIONS, IDEAS, DESIGNS AND ARRANGEMENTS REPRESENTED THEREBY ARE AND SHALL REMAIN THE PROPERTY OF RRM DESIGN GROUP. THEY ARE NOT TO BE USED IN WHOLE OR IN PART FOR ANY PURPOSE NOT AGREED IN CONNECTION WITH ANY WORK OR PROJECT DESIGNED BY RRM DESIGN GROUP FOR THE PROJECT FOR WHICH THEY HAVE BEEN PREPARED AND DEVELOPED WITHOUT THE WRITTEN CONSENT OF RRM DESIGN GROUP. VISUAL CONTACT WITH THESE DRAWINGS AND SPECIFICATIONS SHALL CONSTITUTE PROOF OF ACCEPTANCE OF THE ABOVE RESTRICTIONS. SUBMITTAL OF THESE DOCUMENTS FOR PUBLIC AGENCY REVIEW SHALL NOT BE CONSIDERED A WAIVER OF RRM DESIGN GROUP'S RIGHTS.
RRM DESIGN GROUP COPYRIGHT 2024.
RRM IS A CALIFORNIA CORPORATION

LICENSED LANDSCAPE ARCHITECT
LANCE WIERSCHEM LIC. 4210
SIGNATURE
07.31.2026
EXPIRATION DATE
STATE OF CALIFORNIA

CONSULTANT

AGENCY

FOURTH ST COMMUNITY CENTER AND PARK
HENDERSON AVE., PORTERVILLE, CA 93257

PLANTING NOTES AND SCHEDULE

NO.	REVISION	DATE

PROJECT MANAGER LW
DRAWN BY DK
CHECKED BY LW
DATE 2024.09.19
PROJECT NUMBER 2883-01-RC22
SHEET LP001

PLAN CHECK REVISION 2

N:\2800\2883-01-RC22-Porterville-Fourth-St-Park-Design\Landscape-Architecture\Task-L2-ConDocs\Sheet-Files\LP-2883-01.dwg, LP001, Sep 24, 2024 4:29pm, LDWierschem

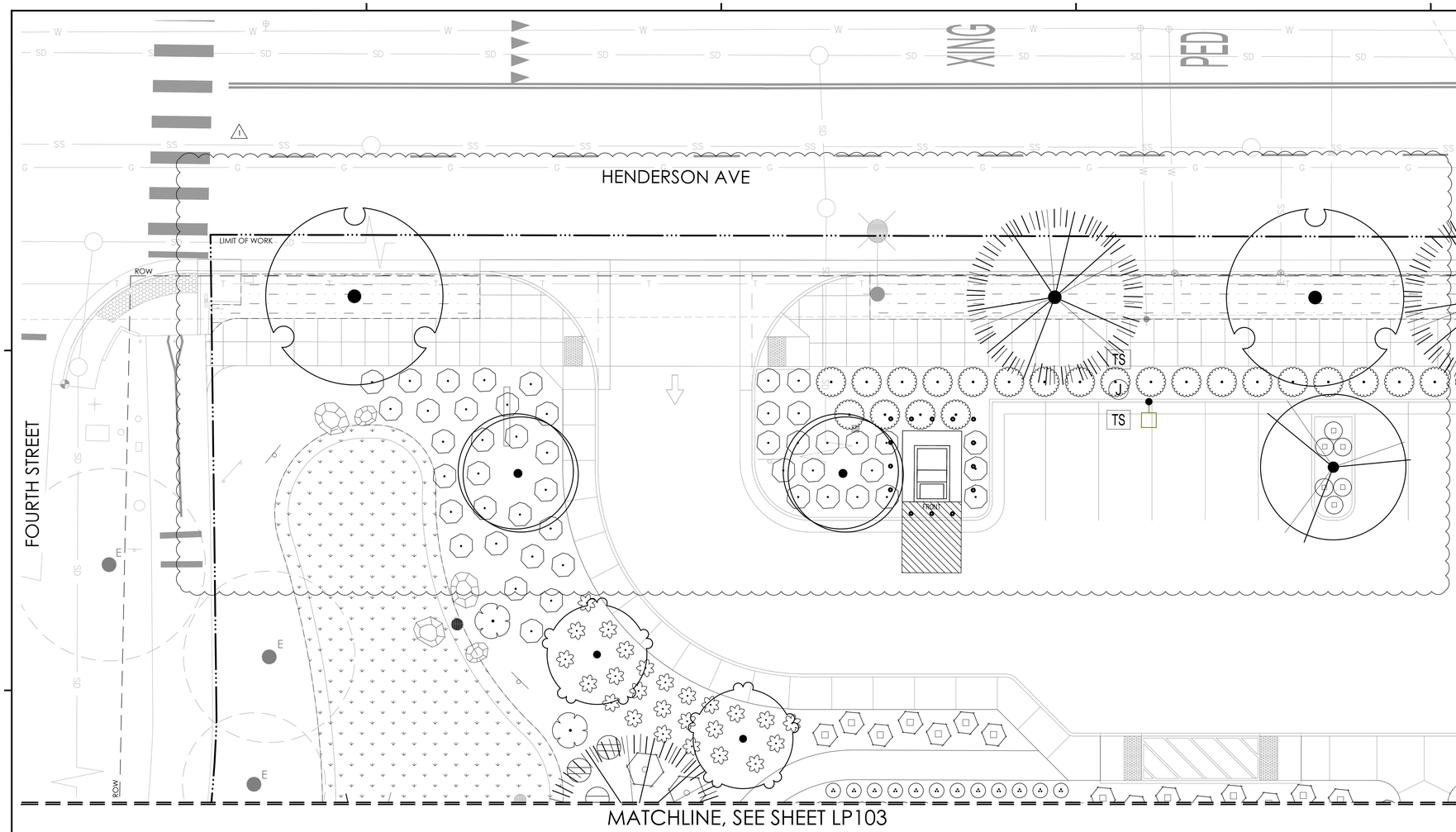

PLANT SCHEDULE

SYMBOL	BOTANICAL NAME	COMMON NAME
TREES		
	ARBUTUS 'MARINA' PER CITY OF PORTERVILLE STREET TREE LIST	STRAWBERRY TREE
	CEDRUS ATLANTICA 'GLAUCA' PER CITY OF PORTERVILLE STREET TREE LIST	BLUE ATLAS CEDAR
	CEDRUS DEODARA	DEODAR CEDAR
	CERCIDIUM X 'DESERT MUSEUM' PER CITY OF PORTERVILLE STREET TREE LIST	DESERT MUSEUM PALO VERDE MULTI-TRUNK
	PINUS ELDARICA PER CITY OF PORTERVILLE STREET TREE LIST	AFGHAN PINE
	PISTACIA CHINENSIS PER CITY OF PORTERVILLE STREET TREE LIST	CHINESE PISTACHE
	PLATANUS RACEMOSA	CALIFORNIA SYCAMORE
	PRUNUS CERASIFERA 'KRAUTER VESUVIUS' PER CITY OF PORTERVILLE STREET TREE LIST	KRAUTER VESUVIUS PURPLE-LEAF PLUM
	QUERCUS LOBATA PER CITY OF PORTERVILLE STREET TREE LIST	VALLEY OAK
	QUERCUS SUBER PER CITY OF PORTERVILLE STREET TREE LIST	CORK OAK
	SEARSIA LANCEA	AFRICAN SUMAC MULTI-TRUNK
	ULMUS WILSONIANA 'PROSPECTOR' PER CITY OF PORTERVILLE STREET TREE LIST	SIBERIAN ELM
	X CHITALPA TASHKENTENSIS 'PINK DAWN' PER CITY OF PORTERVILLE STREET TREE LIST	PINK DAWN CHITALPA MULTI-TRUNKED
	X CUPRESSOCYPARIS LEYLANDII PER CITY OF PORTERVILLE STREET TREE LIST	LEYLAND CYPRESS
SHRUBS		
	ARCTOSTAPHYLOS X 'SUNSET'	SUNSET MANZANITA
	BACCHARIS PILULARIS 'PIGEON POINT'	PIGEON POINT COYOTE BRUSH
	BOUTELOUA GRACILIS 'BLONDE AMBITION'	BLUE GRAMA
	CAREX TUMULICOLA	FOOTHILL SEDGE
	CARPENTERIA CALIFORNICA	BUSH ANEMONE
	CEANOTHUS X 'CONCHA'	CONCHA WILD LILAC
	CHONDROPETALUM ELEPHANTINUM	LARGE CAPE RUSH
	CHONDROPETALUM TECTORUM 'EL CAMPO'	EL CAMPO CAPE RUSH
	CISTUS X 'SUNSET'	MAGENTA ROCKROSE
	DENDROMECON HARFORDII	BUSH POPPY
	FEIJOA SELLOWIANA	PINEAPPLE GUAVA
	FREMONTODENDRON X 'KEN TAYLOR'	KEN TAYLOR FLANNEL BUSH
	HESPERALOE PARVIFLORA	RED YUCCA
	HETEROMELES ARBUTIFOLIA	TOYON
	JUNCUS PATENS 'ELK BLUE'	SPREADING RUSH
	LAURUS NOBILIS SHRUB/COLUMN FORM	SWEET BAY
	LOBELIA LAXIFLORA ANGUSTIFOLIA	MEXICAN LOBELIA
	MUHLENBERGIA DUBIA	PINE MUHLY
	MUHLENBERGIA RIGENS	DEER GRASS
	OLEA EUROPAEA 'MONTRA'	LITTLE OLLIE® OLIVE
	PEROVSKIA ATRIPLICIFOLIA 'BLUE SPIRE'	BLUE SPIRE RUSSIAN SAGE
	RHAMNUS CALIFORNICA	CALIFORNIA COFFEEBERRY
	ROSMARINUS OFFICINALIS 'HUNTINGTON CARPET'	DWARF ROSEMARY
	SALVIA LEUCOPHYLLA 'BEES BLISS'	BEE'S BLISS PURPLE SAGE

SYMBOL	BOTANICAL NAME	COMMON NAME
GROUND COVERS		
	BIORETENTION HYDROSEED	CA NATIVE BIOFILTER SEED MIX
	BOUTELOUA GRACILIS 'BLONDE AMBITION'	BLONDE AMBITION BLUE GRAMA
	CAREX PANSA	SAND DUNE SEDGE
	TURF SOD	CELEBRATION BERMUDA GRASS

MATCHLINE, SEE SHEET LP102

PLANTING NOTES

FOR GENERAL PLANTING NOTES AND PLANT SCHEDULE, SEE SHEET LP001.

0 5 10 20 30 feet

1"=10'

rrm design group
rrmdesign.com | (805) 543-1794
3765 SOUTH HIGUERA STREET, SUITE 102
SAN LUIS OBISPO, CA 93401

THE INCLUDED DRAWINGS, SPECIFICATIONS, IDEAS, DESIGNS AND ARRANGEMENTS REPRESENTED THEREBY ARE AND SHALL REMAIN THE PROPERTY OF RRM DESIGN GROUP. THEY ARE NOT TO BE USED IN WHOLE OR IN PART FOR ANY PURPOSE NOT SPECIFIED HEREIN OR CARRIED IN CONNECTION WITH ANY WORK OR PROJECT OTHER THAN THE SPECIFIED PROJECT FOR WHICH THEY HAVE BEEN PREPARED AND DEVELOPED WITHOUT THE WRITTEN CONSENT OF RRM DESIGN GROUP. VISUAL CONTACT WITH THESE DRAWINGS AND SPECIFICATIONS SHALL CONSTITUTE PROOF OF ACCEPTANCE OF THE ABOVE RESTRICTIONS. SUBMITTAL OF THESE DOCUMENTS FOR PUBLIC AGENCY REVIEW SHALL NOT BE CONSIDERED A WAIVER OF RRM DESIGN GROUP'S RIGHTS.
RRM DESIGN GROUP COPYRIGHT 2024.
RRM IS A CALIFORNIA CORPORATION

LICENSED LANDSCAPE ARCHITECT
LANCE WIERSCHEM LIC. 4210
SIGNATURE
07.31.2026
EXPIRATION DATE
DATE
STATE OF CALIFORNIA

CONSULTANT

AGENCY

FOURTH ST COMMUNITY CENTER AND PARK
HENDERSON AVE., PORTERVILLE, CA 93257

PLANTING PLAN

NO.	REVISION	DATE
1	PLAN CHECK REVISION 1	5/17/24

PROJECT MANAGER
LW
DRAWN BY DK
CHECKED BY LW
DATE
2024.09.19
PROJECT NUMBER
2883-01-RC22
SHEET
LP101

PLAN CHECK REVISION 2

N:\2800\2883-01-RC22-Porterville-Fourth-St-Park-Design\Landscape-Architecture\Task-L2-ConDocs\Sheet-Files\LP-2883-01.dwg, LP101, Sep 24, 2024 4:39pm, LDWierschem

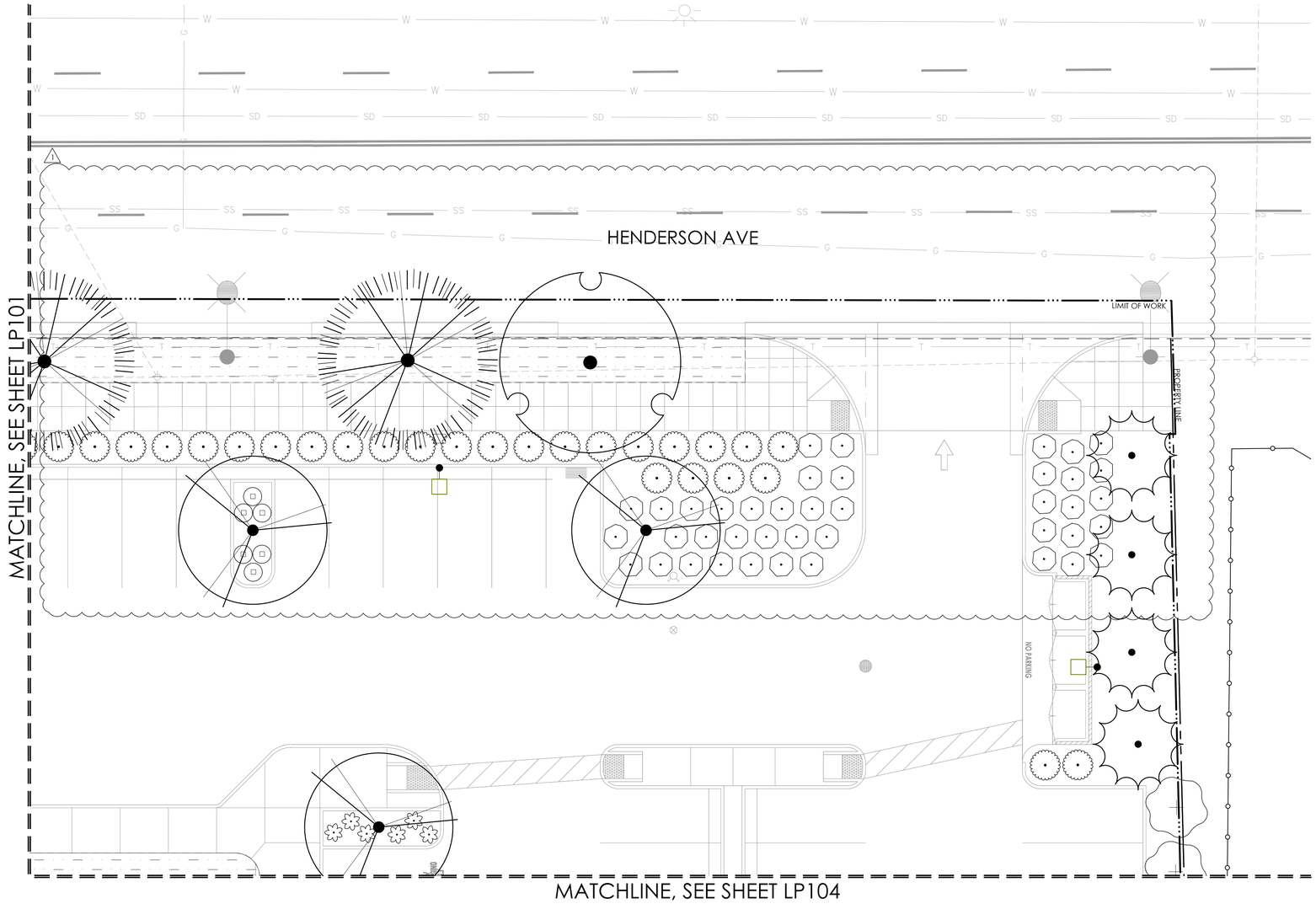

PLANT SCHEDULE

SYMBOL	BOTANICAL NAME	COMMON NAME
TREES		
	ARBUTUS 'MARINA' PER CITY OF PORTERVILLE STREET TREE LIST	STRAWBERRY TREE
	CEDRUS ATLANTICA 'GLAUCA' PER CITY OF PORTERVILLE STREET TREE LIST	BLUE ATLAS CEDAR
	CEDRUS DEODARA	DEODAR CEDAR
	CERCIDIUM X 'DESERT MUSEUM' PER CITY OF PORTERVILLE STREET TREE LIST	DESERT MUSEUM PALO VERDE MULTI-TRUNK
	PINUS ELDARICA PER CITY OF PORTERVILLE STREET TREE LIST	AFGHAN PINE
	PISTACIA CHINENSIS PER CITY OF PORTERVILLE STREET TREE LIST	CHINESE PISTACHE
	PLATANUS RACEMOSA	CALIFORNIA SYCAMORE
	PRUNUS CERASIFERA 'KRAUTER VESUVIUS' PER CITY OF PORTERVILLE STREET TREE LIST	KRAUTER VESUVIUS PURPLE-LEAF PLUM
	QUERCUS LOBATA PER CITY OF PORTERVILLE STREET TREE LIST	VALLEY OAK
	QUERCUS SUBER PER CITY OF PORTERVILLE STREET TREE LIST	CORK OAK
	SEARSIA LANCEA	AFRICAN SUMAC MULTI-TRUNK
	ULMUS WILSONIANA 'PROSPECTOR' PER CITY OF PORTERVILLE STREET TREE LIST	SIBERIAN ELM
	X CHITALPA TASHKENTENSIS 'PINK DAWN' PER CITY OF PORTERVILLE STREET TREE LIST	PINK DAWN CHITALPA MULTI-TRUNKED
	X CUPRESSOCYPARIS LEYLANDII PER CITY OF PORTERVILLE STREET TREE LIST	LEYLAND CYPRESS
SHRUBS		
	ARCTOSTAPHYLOS X 'SUNSET'	SUNSET MANZANITA
	BACCHARIS PILULARIS 'PIGEON POINT'	PIGEON POINT COYOTE BRUSH
	BOUTELOUA GRACILIS 'BLONDE AMBITION'	BLUE GRAMA
	CAREX TUMULICOLA	FOOTHILL SEDGE
	CARPENTERIA CALIFORNICA	BUSH ANEMONE
	CEANOTHUS X 'CONCHA'	CONCHA WILD LILAC
	CHONDROPETALUM ELEPHANTINUM	LARGE CAPE RUSH
	CHONDROPETALUM TECTORUM 'EL CAMPO'	EL CAMPO CAPE RUSH
	CISTUS X 'SUNSET'	MAGENTA ROCKROSE
	DENDROMECON HARFORDII	BUSH POPPY
	FEIJOA SELLOWIANA	PINEAPPLE GUAVA
	FREMONTODENDRON X 'KEN TAYLOR'	KEN TAYLOR FLANNEL BUSH
	HESPERALOE PARVIFLORA	RED YUCCA
	HETEROMELES ARBUTIFOLIA	TOYON
	JUNCUS PATENS 'ELK BLUE'	SPREADING RUSH
	LAURUS NOBILIS SHRUB/COLUMN FORM	SWEET BAY
	LOBELIA LAXIFLORA ANGUSTIFOLIA	MEXICAN LOBELIA
	MUHLENBERGIA DUBIA	PINE MUHLY
	MUHLENBERGIA RIGENS	DEER GRASS
	OLEA EUROPAEA 'MONTRA'	LITTLE OLLIE® OLIVE
	PEROVSKIA ATRIPLICIFOLIA 'BLUE SPIRE'	BLUE SPIRE RUSSIAN SAGE
	RHAMNUS CALIFORNICA	CALIFORNIA COFFEEBERRY
	ROSMARINUS OFFICINALIS 'HUNTINGTON CARPET'	DWARF ROSEMARY
	SALVIA LEUCOPHYLLA 'BEES BLISS'	BEE'S BLISS PURPLE SAGE

SYMBOL	BOTANICAL NAME	COMMON NAME
GROUND COVERS		
	BIORETENTION HYDROSEED	CA NATIVE BIOFILTER SEED MIX
	BOUTELOUA GRACILIS 'BLONDE AMBITION'	BLONDE AMBITION BLUE GRAMA
	CAREX PANSA	SAND DUNE SEDGE
	TURF SOD	CELEBRATION BERMUDA GRASS

PLANTING NOTES

FOR GENERAL PLANTING NOTES AND PLANT SCHEDULE, SEE SHEET LP001.

0 5 10 20 30 feet

1"=10'

rrm design group
rrmdesign.com | (805) 543-1794
3765 SOUTH HIGUERA STREET, SUITE 102
SAN LUIS OBISPO, CA 93401

THE INCLUDED DRAWINGS, SPECIFICATIONS, IDEAS, DESIGNS AND ARRANGEMENTS REPRESENTED THEREBY ARE AND SHALL REMAIN THE PROPERTY OF RRM DESIGN GROUP. THEY ARE NOT TO BE USED IN WHOLE OR IN PART FOR ANY PURPOSE OTHER THAN THE DESIGN IN CONNECTION WITH ANY WORK OR PROJECT DESIGNED BY RRM DESIGN GROUP FOR PROJECT FOR WHICH THEY HAVE BEEN PREPARED AND DEVELOPED WITHOUT THE WRITTEN CONSENT OF RRM DESIGN GROUP. VISUAL CONTACT WITH THESE DRAWINGS OR OTHER PROJECT DATA SHALL NOT CONSTITUTE AGREEMENT TO THESE RESTRICTIONS. SUBMITTAL OF THESE DOCUMENTS FOR PUBLIC AGENCY REVIEW SHALL NOT BE CONSIDERED A WAIVER OF RRM DESIGN GROUP'S RIGHTS.
RRM DESIGN GROUP COPYRIGHT 2024.
RRM IS A CALIFORNIA CORPORATION

LICENSED LANDSCAPE ARCHITECT
LANCE WIERSCHEM LIC. NO. 4210
SIGNATURE
07.31.2026
EXPIRATION DATE
STATE OF CALIFORNIA

CONSULTANT

AGENCY

FOURTH ST COMMUNITY CENTER AND PARK
HENDERSON AVE., PORTERVILLE, CA 93257

PLANTING PLAN

NO.	REVISION	DATE
1	PLAN CHECK REVISION 1	5/17/24

PROJECT MANAGER
LW
DRAWN BY DK
CHECKED BY LW
DATE
2024.09.19
PROJECT NUMBER
2883-01-RC22
SHEET
LP102

PLAN CHECK REVISION 2

N:\2800\2883-01-RC22-Portenville-Fourth-St-Park-Design\Landscape-Architecture\Task-L2-ConDocs\Sheet-Files\LP-2883-01.dwg, LP102, Sep 24, 2024 4:49pm, LDWierschem

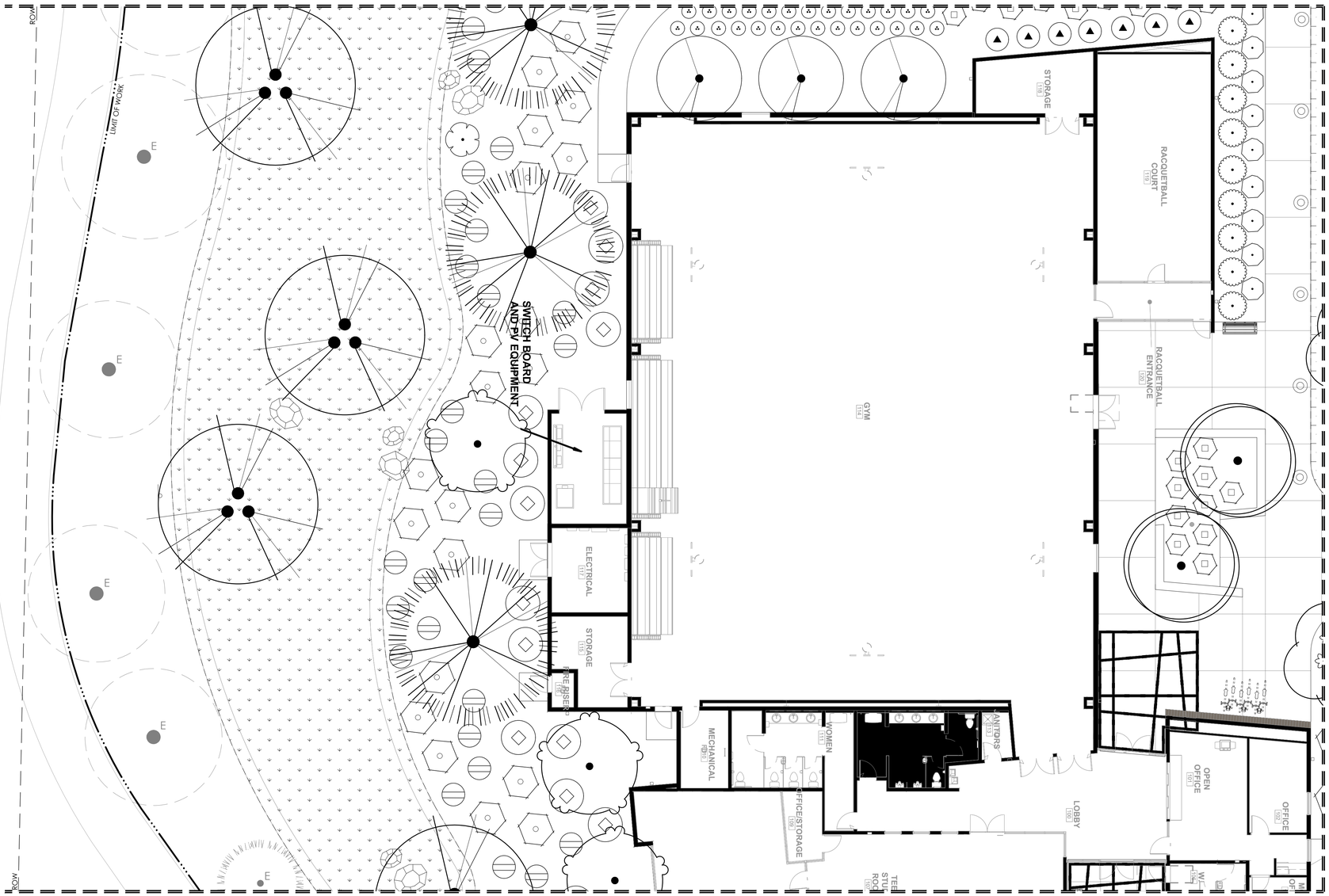

MATCHLINE, SEE SHEET LP103

PLANT SCHEDULE

SYMBOL	BOTANICAL NAME	COMMON NAME
TREES		
	ARBUTUS 'MARINA' PER CITY OF PORTERVILLE STREET TREE LIST	STRAWBERRY TREE
	CEDRUS ATLANTICA 'GLAUCA' PER CITY OF PORTERVILLE STREET TREE LIST	BLUE ATLAS CEDAR
	CEDRUS DEODARA	DEODAR CEDAR
	CERCIDIUM X 'DESERT MUSEUM' PER CITY OF PORTERVILLE STREET TREE LIST	DESERT MUSEUM PALO VERDE MULTI-TRUNK
	PINUS ELDARICA PER CITY OF PORTERVILLE STREET TREE LIST	AFGHAN PINE
	PISTACIA CHINENSIS PER CITY OF PORTERVILLE STREET TREE LIST	CHINESE PISTACHE
	PLATANUS RACEMOSA	CALIFORNIA SYCAMORE
	PRUNUS CERASIFERA 'KRAUTER VESUVIUS' PER CITY OF PORTERVILLE STREET TREE LIST	KRAUTER VESUVIUS PURPLE-LEAF PLUM
	QUERCUS LOBATA PER CITY OF PORTERVILLE STREET TREE LIST	VALLEY OAK
	QUERCUS SUBER PER CITY OF PORTERVILLE STREET TREE LIST	CORK OAK
	SEARSIA LANCEA	AFRICAN SUMAC MULTI-TRUNK
	ULMUS WILSONIANA 'PROSPECTOR' PER CITY OF PORTERVILLE STREET TREE LIST	SIBERIAN ELM
	X CHITALPA TASHKENTENSIS 'PINK DAWN' PER CITY OF PORTERVILLE STREET TREE LIST	PINK DAWN CHITALPA MULTI-TRUNKED
	X CUPRESSOCYPARIS LEYLANDII PER CITY OF PORTERVILLE STREET TREE LIST	LEYLAND CYPRESS
SHRUBS		
	ARCTOSTAPHYLOS X 'SUNSET'	SUNSET MANZANITA
	BACCHARIS PILULARIS 'PIGEON POINT'	PIGEON POINT COYOTE BRUSH
	BOUTELOUA GRACILIS 'BLONDE AMBITION'	BLUE GRAMA
	CAREX TUMULICOLA	FOOTHILL SEDGE
	CARPENTERIA CALIFORNICA	BUSH ANEMONE
	CEANOTHUS X 'CONCHA'	CONCHA WILD LILAC
	CHONDROPETALUM ELEPHANTINUM	LARGE CAPE RUSH
	CHONDROPETALUM TECTORUM 'EL CAMPO'	EL CAMPO CAPE RUSH
	CISTUS X 'SUNSET'	MAGENTA ROCKROSE
	DENDROMECON HARFORDII	BUSH POPPY
	FEIJOA SELLOWIANA	PINEAPPLE GUAVA
	FREMONTODENDRON X 'KEN TAYLOR'	KEN TAYLOR FLANNEL BUSH
	HESPERALOE PARVIFLORA	RED YUCCA
	HETEROMELES ARBUTIFOLIA	TOYON
	JUNCUS PATENS 'ELK BLUE'	SPREADING RUSH
	LAURUS NOBILIS SHRUB/COLUMN FORM	SWEET BAY
	LOBELIA LAXIFLORA ANGUSTIFOLIA	MEXICAN LOBELIA
	MUHLENBERGIA DUBIA	PINE MUHLY
	MUHLENBERGIA RIGENS	DEER GRASS
	OLEA EUROPAEA 'MONTRA'	LITTLE OLLIE® OLIVE
	PEROVSKIA ATRIPLICIFOLIA 'BLUE SPIRE'	BLUE SPIRE RUSSIAN SAGE
	RHAMNUS CALIFORNICA	CALIFORNIA COFFEEBERRY
	ROSMARINUS OFFICINALIS 'HUNTINGTON CARPET'	DWARF ROSEMARY
	SALVIA LEUCOPHYLLA 'BEES BLISS'	BEE'S BLISS PURPLE SAGE
SYMBOL	BOTANICAL NAME	COMMON NAME
GROUND COVERS		
	BIORETENTION HYDROSEED	CA NATIVE BIOFILTER SEED MIX
	BOUTELOUA GRACILIS 'BLONDE AMBITION'	BLONDE AMBITION BLUE GRAMA
	CAREX PANSA	SAND DUNE SEDGE
	TURF SOD	CELEBRATION BERMUDA GRASS

PLANTING NOTES

FOR GENERAL PLANTING NOTES AND PLANT SCHEDULE, SEE SHEET LP001.

0 5 10 20 30 feet

1"=10'

rrm design group
rrmdesign.com | (805) 543-1794
3765 SOUTH HIGUERA STREET, SUITE 102
SAN LUIS OBISPO, CA 93401

THE INCLUDED DRAWINGS, SPECIFICATIONS, IDEAS, DESIGNS AND ARRANGEMENTS REPRESENTED THEREBY ARE AND SHALL REMAIN THE PROPERTY OF RRM DESIGN GROUP. THEY ARE NOT TO BE USED IN WHOLE OR IN PART FOR ANY PURPOSE NOT AGREED IN CONNECTION WITH ANY WORK OR PROJECT. DESIGN BY RRM THE SPECIFIED PROJECT FOR WHICH THEY HAVE BEEN PREPARED AND PREVELOPED WITHOUT THE WRITTEN CONSENT OF RRM DESIGN GROUP. VISUAL CONTACT WITH THESE DRAWINGS AND SPECIFICATIONS SHALL CONSTITUTE PROOF OF ACCEPTANCE OF THESE RESTRICTIONS. SUBMITTAL OF THESE DOCUMENTS FOR PUBLIC AGENCY REVIEW SHALL NOT BE CONSIDERED A WAIVER OF RRM DESIGN GROUP'S RIGHTS.
RRM DESIGN GROUP COPYRIGHT 2024.
RRM IS A CALIFORNIA CORPORATION

LICENSED LANDSCAPE ARCHITECT
LANCE WIERSCHEM LIC. NO. 4210
SIGNATURE
07.31.2026
EXPIRATION DATE
DATE
STATE OF CALIFORNIA

CONSULTANT

AGENCY

FOURTH ST COMMUNITY CENTER AND PARK
HENDERSON AVE., PORTERVILLE, CA 93257

PLANTING PLAN

NO.	REVISION	DATE

PLAN CHECK REVISION 2

PROJECT MANAGER: LW
DRAWN BY: DK
CHECKED BY: LW
DATE: 2024.09.19
PROJECT NUMBER: 2883-01-RC22
SHEET: LP103

N:\2800\2883-01-RC22-Portervillle-Fourth-St-Park-Design\Landscape-Architecture\Task-L2-ConDocs\Sheet-Files\LP-2883-01.dwg, LP103, Sep 24, 2024 5:00pm, LDWierschem

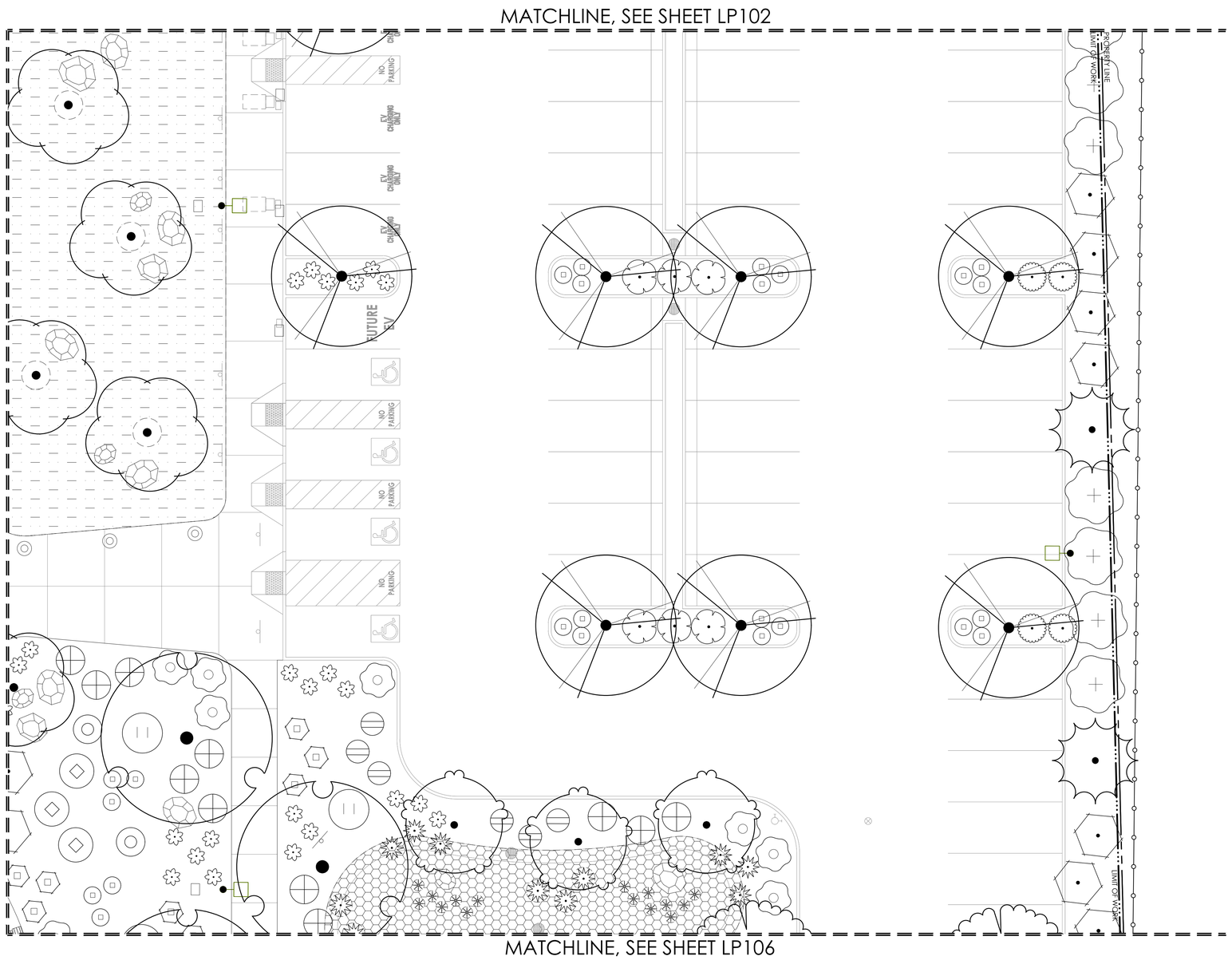

PLANT SCHEDULE

SYMBOL	BOTANICAL NAME	COMMON NAME
TREES		
	ARBUTUS 'MARINA' PER CITY OF PORTERVILLE STREET TREE LIST	STRAWBERRY TREE
	CEDRUS ATLANTICA 'GLAUCA' PER CITY OF PORTERVILLE STREET TREE LIST	BLUE ATLAS CEDAR
	CEDRUS DEODARA	DEODAR CEDAR
	CERCIDIUM X 'DESERT MUSEUM' PER CITY OF PORTERVILLE STREET TREE LIST	DESERT MUSEUM PALO VERDE MULTI-TRUNK
	PINUS ELDARICA PER CITY OF PORTERVILLE STREET TREE LIST	AFGHAN PINE
	PISTACIA CHINENSIS PER CITY OF PORTERVILLE STREET TREE LIST	CHINESE PISTACHE
	PLATANUS RACEMOSA	CALIFORNIA SYCAMORE
	PRUNUS CERASIFERA 'KRAUTER VESUVIUS' PER CITY OF PORTERVILLE STREET TREE LIST	KRAUTER VESUVIUS PURPLE-LEAF PLUM
	QUERCUS LOBATA PER CITY OF PORTERVILLE STREET TREE LIST	VALLEY OAK
	QUERCUS SUBER PER CITY OF PORTERVILLE STREET TREE LIST	CORK OAK
	SEARSIA LANCEA	AFRICAN SUMAC MULTI-TRUNK
	ULMUS WILSONIANA 'PROSPECTOR' PER CITY OF PORTERVILLE STREET TREE LIST	SIBERIAN ELM
	X CHITALPA TASHKENTENSIS 'PINK DAWN' PER CITY OF PORTERVILLE STREET TREE LIST	PINK DAWN CHITALPA MULTI-TRUNKED
	X CUPRESSOCYPARIS LEYLANDII PER CITY OF PORTERVILLE STREET TREE LIST	LEYLAND CYPRESS
SHRUBS		
	ARCTOSTAPHYLOS X 'SUNSET'	SUNSET MANZANITA
	BACCHARIS PILULARIS 'PIGEON POINT'	PIGEON POINT COYOTE BRUSH
	BOUTELOUA GRACILIS 'BLONDE AMBITION'	BLUE GRAMA
	CAREX TUMULICOLA	FOOTHILL SEDGE
	CARPENTERIA CALIFORNICA	BUSH ANEMONE
	CEANOTHUS X 'CONCHA'	CONCHA WILD LILAC
	CHONDROPETALUM ELEPHANTINUM	LARGE CAPE RUSH
	CHONDROPETALUM TECTORUM 'EL CAMPO'	EL CAMPO CAPE RUSH
	CISTUS X 'SUNSET'	MAGENTA ROCKROSE
	DENDROMECON HARFORDII	BUSH POPPY
	FEIJOA SELLOWIANA	PINEAPPLE GUAVA
	FREMONTODENDRON X 'KEN TAYLOR'	KEN TAYLOR FLANNEL BUSH
	HESPERALOE PARVIFLORA	RED YUCCA
	HETEROMELES ARBUTIFOLIA	TOYON
	JUNCUS PATENS 'ELK BLUE'	SPREADING RUSH
	LAURUS NOBILIS SHRUB/COLUMN FORM	SWEET BAY
	LOBELIA LAXIFLORA ANGUSTIFOLIA	MEXICAN LOBELIA
	MUHLENBERGIA DUBIA	PINE MUHLY
	MUHLENBERGIA RIGENS	DEER GRASS
	OLEA EUROPAEA 'MONTRA'	LITTLE OLLIE® OLIVE
	PEROVSKIA ATRIPLICIFOLIA 'BLUE SPIRE'	BLUE SPIRE RUSSIAN SAGE
	RHAMNUS CALIFORNICA	CALIFORNIA COFFEEBERRY
	ROSMARINUS OFFICINALIS 'HUNTINGTON CARPET'	DWARF ROSEMARY
	SALVIA LEUCOPHYLLA 'BEES BLISS'	BEE'S BLISS PURPLE SAGE

SYMBOL	BOTANICAL NAME	COMMON NAME
GROUND COVERS		
	BIORETENTION HYDROSEED	CA NATIVE BIOFILTER SEED MIX
	BOUTELOUA GRACILIS 'BLONDE AMBITION'	BLONDE AMBITION BLUE GRAMA
	CAREX PANSA	SAND DUNE SEDGE
	TURF SOD	CELEBRATION BERMUDA GRASS

PLANTING NOTES

FOR GENERAL PLANTING NOTES AND PLANT SCHEDULE, SEE SHEET LP001.

0 5 10 20 30 feet

1"=10'

rrm design group
rrmdesign.com | (805) 543-1794
3765 SOUTH HIGUERA STREET, SUITE 102
SAN LUIS OBISPO, CA 93401

THE INCLUDED DRAWINGS, SPECIFICATIONS, IDEAS, DESIGNS AND ARRANGEMENTS REPRESENTED THEREBY ARE AND SHALL REMAIN THE PROPERTY OF RRM DESIGN GROUP. THEY ARE NOT TO BE USED IN WHOLE OR IN PART FOR ANY PURPOSE NOT AGREED IN CONNECTION WITH ANY WORK OR PROJECT DESIGNED BY RRM DESIGN GROUP FOR PROJECT FOR WHICH THEY HAVE BEEN PREPARED AND DEVELOPED WITHOUT THE WRITTEN CONSENT OF RRM DESIGN GROUP. VISUAL CONTACT WITH THESE DRAWINGS OR OTHER PROPERTY OF RRM DESIGN GROUP SHALL CONSTITUTE PROOF OF THESE RESTRICTIONS. SUBMITTAL OF THESE DOCUMENTS FOR PUBLIC AGENCY REVIEW SHALL NOT BE CONSIDERED A WAIVER OF RRM DESIGN GROUP'S RIGHTS.
RRM DESIGN GROUP COPYRIGHT 2024.
RRM IS A CALIFORNIA CORPORATION

LICENSED LANDSCAPE ARCHITECT
LANCE WIERSCHEM LIC. 4210
SIGNATURE
07.31.2026
EXPIRATION DATE
DATE
STATE OF CALIFORNIA

CONSULTANT

AGENCY

FOURTH ST COMMUNITY CENTER AND PARK
HENDERSON AVE., PORTERVILLE, CA 93257

PLANTING PLAN

NO.	REVISION	DATE

PROJECT MANAGER
LW
DRAWN BY DK
CHECKED BY LW
DATE
2024.09.19
PROJECT NUMBER
2883-01-RC22
SHEET
LP104

PLAN CHECK REVISION 2

N:\2800\2883-01-RC22-Portervillle-Fourth-St-Park-Design\Landscape-Architecture\Task-L2-ConDocs\Sheet-Files\LP-2883-01.dwg, LP104, Sep 24, 2024 5:11pm, LDWierschem

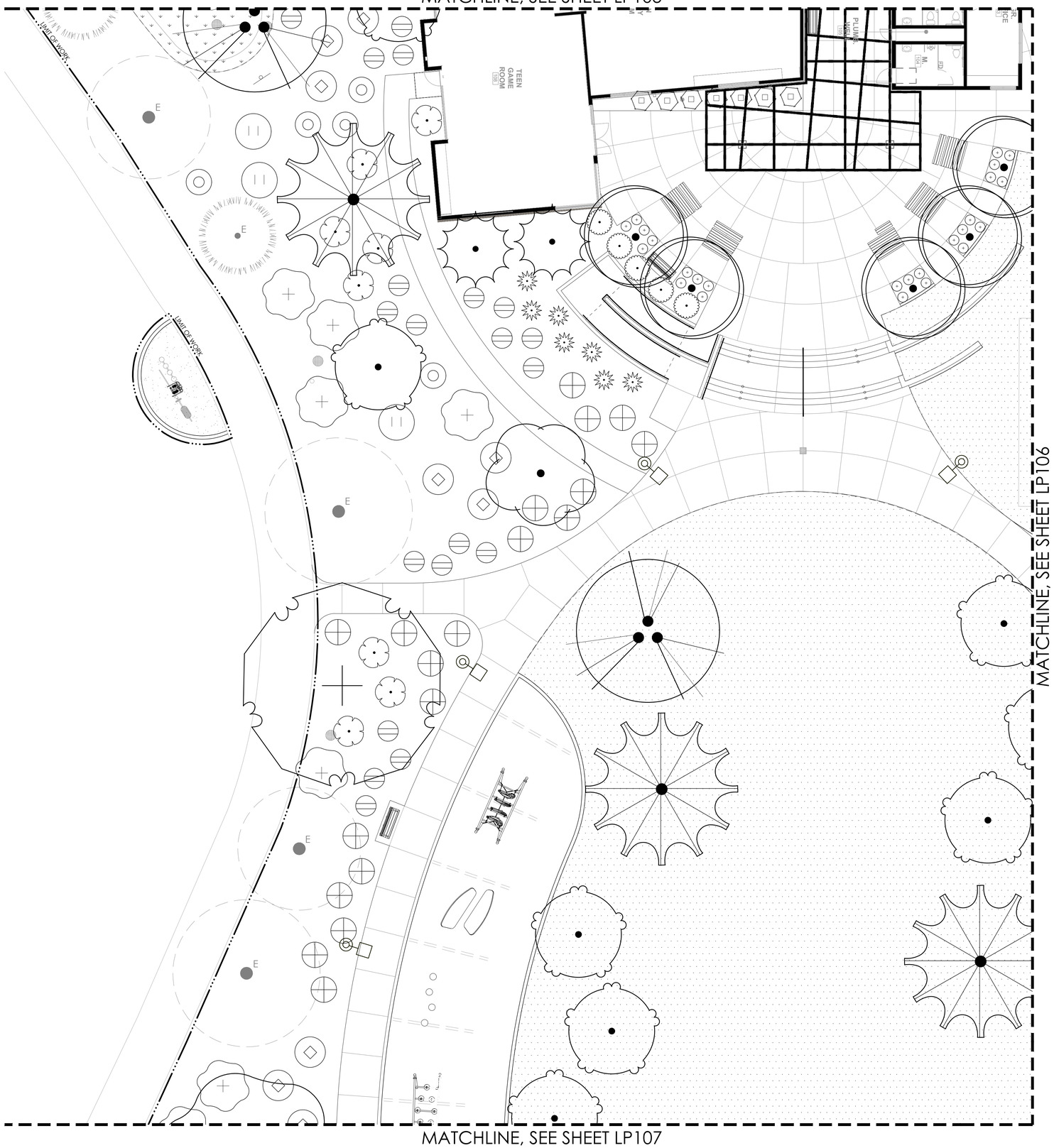

PLANT SCHEDULE

SYMBOL	BOTANICAL NAME	COMMON NAME
TREES		
	ARBUTUS 'MARINA' PER CITY OF PORTERVILLE STREET TREE LIST	STRAWBERRY TREE
	CEDRUS ATLANTICA 'GLAUCA' PER CITY OF PORTERVILLE STREET TREE LIST	BLUE ATLAS CEDAR
	CEDRUS DEODARA	DEODAR CEDAR
	CERCIDIUM X 'DESERT MUSEUM' PER CITY OF PORTERVILLE STREET TREE LIST	DESERT MUSEUM PALO VERDE MULTI-TRUNK
	PINUS ELDARICA PER CITY OF PORTERVILLE STREET TREE LIST	AFGHAN PINE
	PISTACIA CHINENSIS PER CITY OF PORTERVILLE STREET TREE LIST	CHINESE PISTACHE
	PLATANUS RACEMOSA	CALIFORNIA SYCAMORE
	PRUNUS CERASIFERA 'KRAUTER VESUVIUS' PER CITY OF PORTERVILLE STREET TREE LIST	KRAUTER VESUVIUS PURPLE-LEAF PLUM
	QUERCUS LOBATA PER CITY OF PORTERVILLE STREET TREE LIST	VALLEY OAK
	QUERCUS SUBER PER CITY OF PORTERVILLE STREET TREE LIST	CORK OAK
	SEARSIA LANCEA	AFRICAN SUMAC MULTI-TRUNK
	ULMUS WILSONIANA 'PROSPECTOR' PER CITY OF PORTERVILLE STREET TREE LIST	SIBERIAN ELM
	X CHITALPA TASHKENTENSIS 'PINK DAWN' PER CITY OF PORTERVILLE STREET TREE LIST	PINK DAWN CHITALPA MULTI-TRUNKED
	X CUPRESSOCYPARIS LEYLANDII PER CITY OF PORTERVILLE STREET TREE LIST	LEYLAND CYPRESS
SHRUBS		
	ARCTOSTAPHYLOS X 'SUNSET'	SUNSET MANZANITA
	BACCHARIS PILULARIS 'PIGEON POINT'	PIGEON POINT COYOTE BRUSH
	BOUTELOUA GRACILIS 'BLONDE AMBITION'	BLUE GRAMA
	CAREX TUMULICOLA	FOOTHILL SEDGE
	CARPENTERIA CALIFORNICA	BUSH ANEMONE
	CEANOTHUS X 'CONCHA'	CONCHA WILD LILAC
	CHONDROPETALUM ELEPHANTINUM	LARGE CAPE RUSH
	CHONDROPETALUM TECTORUM 'EL CAMPO'	EL CAMPO CAPE RUSH
	CISTUS X 'SUNSET'	MAGENTA ROCKROSE
	DENDROMECON HARFORDII	BUSH POPPY
	FEIJOA SELLOWIANA	PINEAPPLE GUAVA
	FREMONTODENDRON X 'KEN TAYLOR'	KEN TAYLOR FLANNEL BUSH
	HESPERALOE PARVIFLORA	RED YUCCA
	HETEROMELES ARBUTIFOLIA	TOYON
	JUNCUS PATENS 'ELK BLUE'	SPREADING RUSH
	LAURUS NOBILIS SHRUB/COLUMN FORM	SWEET BAY
	LOBELIA LAXIFLORA ANGUSTIFOLIA	MEXICAN LOBELIA
	MUHLENBERGIA DUBIA	PINE MUHLY
	MUHLENBERGIA RIGENS	DEER GRASS
	OLEA EUROPAEA 'MONTRA'	LITTLE OLLIE® OLIVE
	PEROVSKIA ATRIPLICIFOLIA 'BLUE SPIRE'	BLUE SPIRE RUSSIAN SAGE
	RHAMNUS CALIFORNICA	CALIFORNIA COFFEEBERRY
	ROSMARINUS OFFICINALIS 'HUNTINGTON CARPET'	DWARF ROSEMARY
	SALVIA LEUCOPHYLLA 'BEES BLISS'	BEE'S BLISS PURPLE SAGE

SYMBOL	BOTANICAL NAME	COMMON NAME
GROUND COVERS		
	BIORETENTION HYDROSEED	CA NATIVE BIOFILTER SEED MIX
	BOUTELOUA GRACILIS 'BLONDE AMBITION'	BLONDE AMBITION BLUE GRAMA
	CAREX PANSA	SAND DUNE SEDGE
	TURF SOD	CELEBRATION BERMUDA GRASS

PLANTING NOTES

FOR GENERAL PLANTING NOTES AND PLANT SCHEDULE, SEE SHEET LP001.

0 5 10 20 30 feet

1"=10'

rrm design group
rrmdesign.com | (805) 543-1794
3765 SOUTH HIGUERA STREET, SUITE 102
SAN LUIS OBISPO, CA 93401

THE INCLUDED DRAWINGS, SPECIFICATIONS, IDEAS, DESIGNS AND ARRANGEMENTS REPRESENTED THEREON ARE AND SHALL REMAIN THE PROPERTY OF RRM DESIGN GROUP. THEY ARE NOT TO BE USED IN WHOLE OR IN PART FOR ANY PURPOSE NOT SPECIFIED IN CONNECTION WITH ANY WORK OR PROJECT OTHER THAN THE SPECIFIED PROJECT FOR WHICH THEY HAVE BEEN PREPARED AND DEVELOPED WITHOUT THE WRITTEN CONSENT OF RRM DESIGN GROUP. VISUAL CONTACT WITH THESE DRAWINGS AND SPECIFICATIONS SHALL CONSTITUTE PROOF OF ACCEPTANCE OF THE ABOVE RESTRICTIONS. SUBMITTAL OF THESE DOCUMENTS FOR PUBLIC AGENCY REVIEW SHALL NOT BE CONSIDERED A WAIVER OF RRM DESIGN GROUP'S RIGHTS.
RRM DESIGN GROUP COPYRIGHT 2024.
RRM IS A CALIFORNIA CORPORATION

LICENSED LANDSCAPE ARCHITECT
LANCE WIERSCHEM LIC. 4210
SIGNATURE
07.31.2026
EXPIRATION DATE
STATE OF CALIFORNIA

CONSULTANT

AGENCY

FOURTH ST COMMUNITY CENTER AND PARK
HENDERSON AVE., PORTERVILLE, CA 93257

PLANTING PLAN

NO.	REVISION	DATE

PLAN CHECK REVISION 2

PROJECT MANAGER
LW

DRAWN BY DK
CHECKED BY LW

DATE
2024.09.19

PROJECT NUMBER
2883-01-RC22

SHEET
LP105

N:\2800\2883-01-RC22-Portersville-Fourth-St-Park-Design\Landscape-Architecture\Task-L2-ConDocs\Sheet-Files\LP-2883-01.dwg, LP105, Sep 24, 2024, 5:21pm, LDWierschem

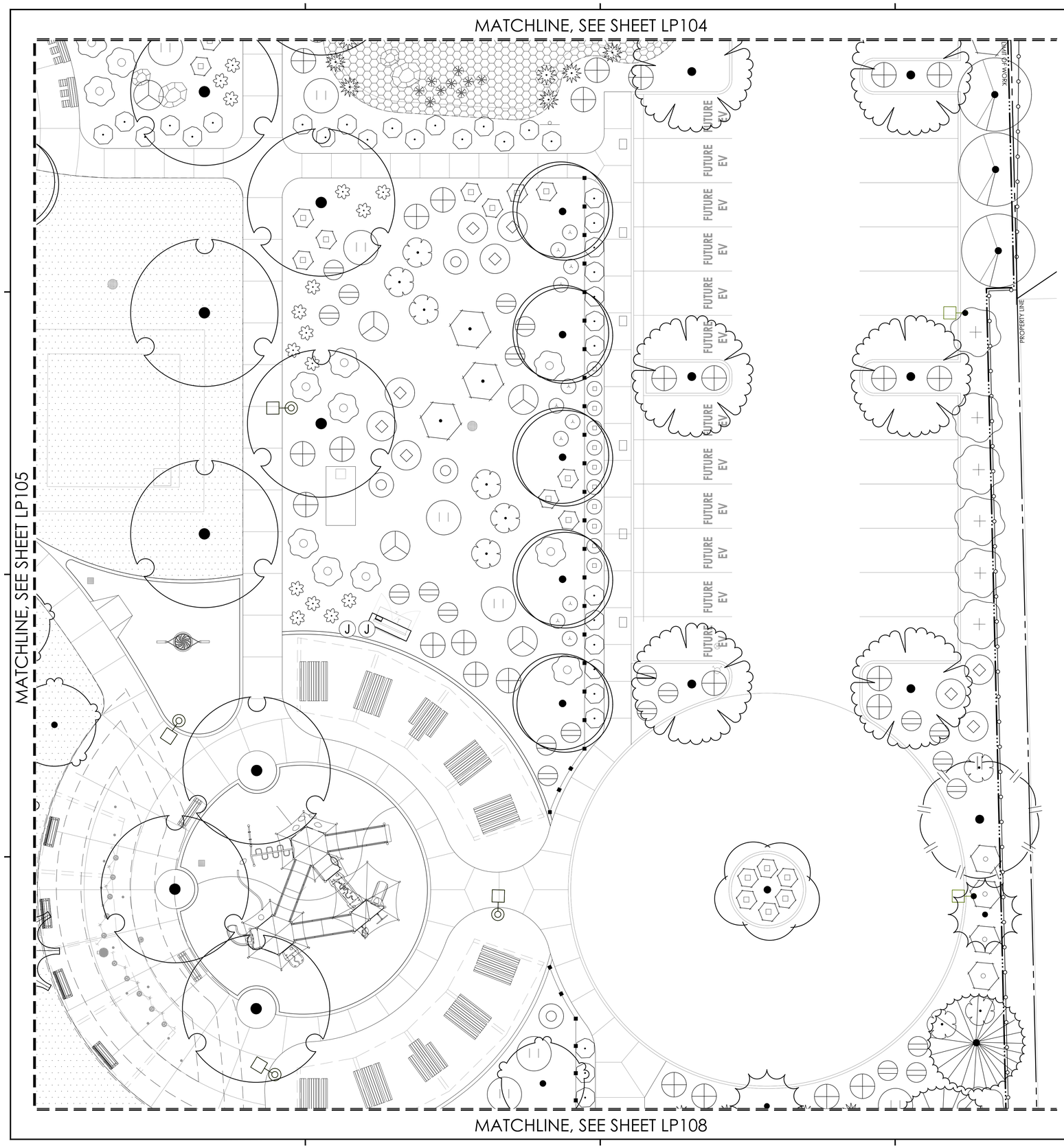

PLANT SCHEDULE

SYMBOL	BOTANICAL NAME	COMMON NAME
TREES		
	ARBUTUS 'MARINA' PER CITY OF PORTERVILLE STREET TREE LIST	STRAWBERRY TREE
	CEDRUS ATLANTICA 'GLAUCA' PER CITY OF PORTERVILLE STREET TREE LIST	BLUE ATLAS CEDAR
	CEDRUS DEODARA	DEODAR CEDAR
	CERCIDIUM X 'DESERT MUSEUM' PER CITY OF PORTERVILLE STREET TREE LIST	DESERT MUSEUM PALO VERDE MULTI-TRUNK
	PINUS ELDARICA PER CITY OF PORTERVILLE STREET TREE LIST	AFGHAN PINE
	PISTACIA CHINENSIS PER CITY OF PORTERVILLE STREET TREE LIST	CHINESE PISTACHE
	PLATANUS RACEMOSA	CALIFORNIA SYCAMORE
	PRUNUS CERASIFERA 'KRAUTER VESUVIUS' PER CITY OF PORTERVILLE STREET TREE LIST	KRAUTER VESUVIUS PURPLE-LEAF PLUM
	QUERCUS LOBATA PER CITY OF PORTERVILLE STREET TREE LIST	VALLEY OAK
	QUERCUS SUBER PER CITY OF PORTERVILLE STREET TREE LIST	CORK OAK
	SEARSIA LANCEA	AFRICAN SUMAC MULTI-TRUNK
	ULMUS WILSONIANA 'PROSPECTOR' PER CITY OF PORTERVILLE STREET TREE LIST	SIBERIAN ELM
	X CHITALPA TASHKENTENSIS 'PINK DAWN' PER CITY OF PORTERVILLE STREET TREE LIST	PINK DAWN CHITALPA MULTI-TRUNKED
	X CUPRESSOCYPARIS LEYLANDII PER CITY OF PORTERVILLE STREET TREE LIST	LEYLAND CYPRESS
SHRUBS		
	ARCTOSTAPHYLOS X 'SUNSET'	SUNSET MANZANITA
	BACCHARIS PILULARIS 'PIGEON POINT'	PIGEON POINT COYOTE BRUSH
	BOUTELOUA GRACILIS 'BLONDE AMBITION'	BLUE GRAMA
	CAREX TUMULICOLA	FOOTHILL SEDGE
	CARPENTERIA CALIFORNICA	BUSH ANEMONE
	CEANOTHUS X 'CONCHA'	CONCHA WILD LILAC
	CHONDROPETALUM ELEPHANTINUM	LARGE CAPE RUSH
	CHONDROPETALUM TECTORUM 'EL CAMPO'	EL CAMPO CAPE RUSH
	CISTUS X 'SUNSET'	MAGENTA ROCKROSE
	DENDROMECON HARFORDII	BUSH POPPY
	FEIJOA SELLOWIANA	PINEAPPLE GUAVA
	FREMONTODENDRON X 'KEN TAYLOR'	KEN TAYLOR FLANNEL BUSH
	HESPERALOE PARVIFLORA	RED YUCCA
	HETEROMELES ARBUTIFOLIA	TOYON
	JUNCUS PATENS 'ELK BLUE'	SPREADING RUSH
	LAURUS NOBILIS SHRUB/COLUMN FORM	SWEET BAY
	LOBELIA LAXIFLORA ANGUSTIFOLIA	MEXICAN LOBELIA
	MUHLENBERGIA DUBIA	PINE MUHLY
	MUHLENBERGIA RIGENS	DEER GRASS
	OLEA EUROPAEA 'MONTRA'	LITTLE OLLIE® OLIVE
	PEROVSKIA ATRIPLICIFOLIA 'BLUE SPIRE'	BLUE SPIRE RUSSIAN SAGE
	RHAMNUS CALIFORNICA	CALIFORNIA COFFEEBERRY
	ROSMARINUS OFFICINALIS 'HUNTINGTON CARPET'	DWARF ROSEMARY
	SALVIA LEUCOPHYLLA 'BEES BLISS'	BEE'S BLISS PURPLE SAGE

SYMBOL	BOTANICAL NAME	COMMON NAME
GROUND COVERS		
	BIORETENTION HYDROSEED	CA NATIVE BIOFILTER SEED MIX
	BOUTELOUA GRACILIS 'BLONDE AMBITION'	BLONDE AMBITION BLUE GRAMA
	CAREX PANSA	SAND DUNE SEDGE
	TURF SOD	CELEBRATION BERMUDA GRASS

PLANTING NOTES

FOR GENERAL PLANTING NOTES AND PLANT SCHEDULE, SEE SHEET LP001.

0 5 10 20 30 feet

1"=10'

rrm design group
rrmdesign.com | (805) 543-1794
3765 SOUTH HIGUERA STREET, SUITE 102
SAN LUIS OBISPO, CA 93401

THE INCLUDED DRAWINGS, SPECIFICATIONS, IDEAS, DESIGNS AND ARRANGEMENTS REPRESENTED THEREBY ARE AND SHALL REMAIN THE PROPERTY OF RRM DESIGN GROUP. THEY ARE NOT TO BE USED IN WHOLE OR IN PART FOR ANY PURPOSE NOT SPECIFIED IN CONNECTION WITH ANY WORK OR PROJECT OTHER THAN THE SPECIFIED PROJECT FOR WHICH THEY HAVE BEEN PREPARED AND DEVELOPED. WITHOUT THE WRITTEN CONSENT OF RRM DESIGN GROUP, VISUAL CONTACT WITH THESE DRAWINGS AND SPECIFICATIONS SHALL ESTABLISH ANOTHER PARTY'S ACCEPTANCE OF THESE RESTRICTIONS. SUBMITTAL OF THESE DOCUMENTS FOR PUBLIC AGENCY REVIEW SHALL NOT BE CONSIDERED A WAIVER OF RRM DESIGN GROUP'S RIGHTS.
RRM DESIGN GROUP COPYRIGHT 2024.
RRM IS A CALIFORNIA CORPORATION

LICENSED LANDSCAPE ARCHITECT
LANCE WIERSCHEM LIC. 4210
SIGNATURE
07.31.2026
EXPIRATION DATE
STATE OF CALIFORNIA

CONSULTANT

AGENCY

FOURTH ST COMMUNITY CENTER AND PARK
HENDERSON AVE., PORTERVILLE, CA 93257

PLANTING PLAN

NO.	REVISION	DATE

PROJECT MANAGER
LW
DRAWN BY DK
CHECKED BY LW
DATE
2024.09.19
PROJECT NUMBER
2883-01-RC22
SHEET
LP106

PLAN CHECK REVISION 2

N:\2800\2883-01-RC22-Porterville-Fourth-St-Park-Design\Landscape-Architecture\Task-L2-ConDocs\Sheet-Files\LP-2883-01.dwg, LP106, Sep 24, 2024 5:32pm, LDWierschem

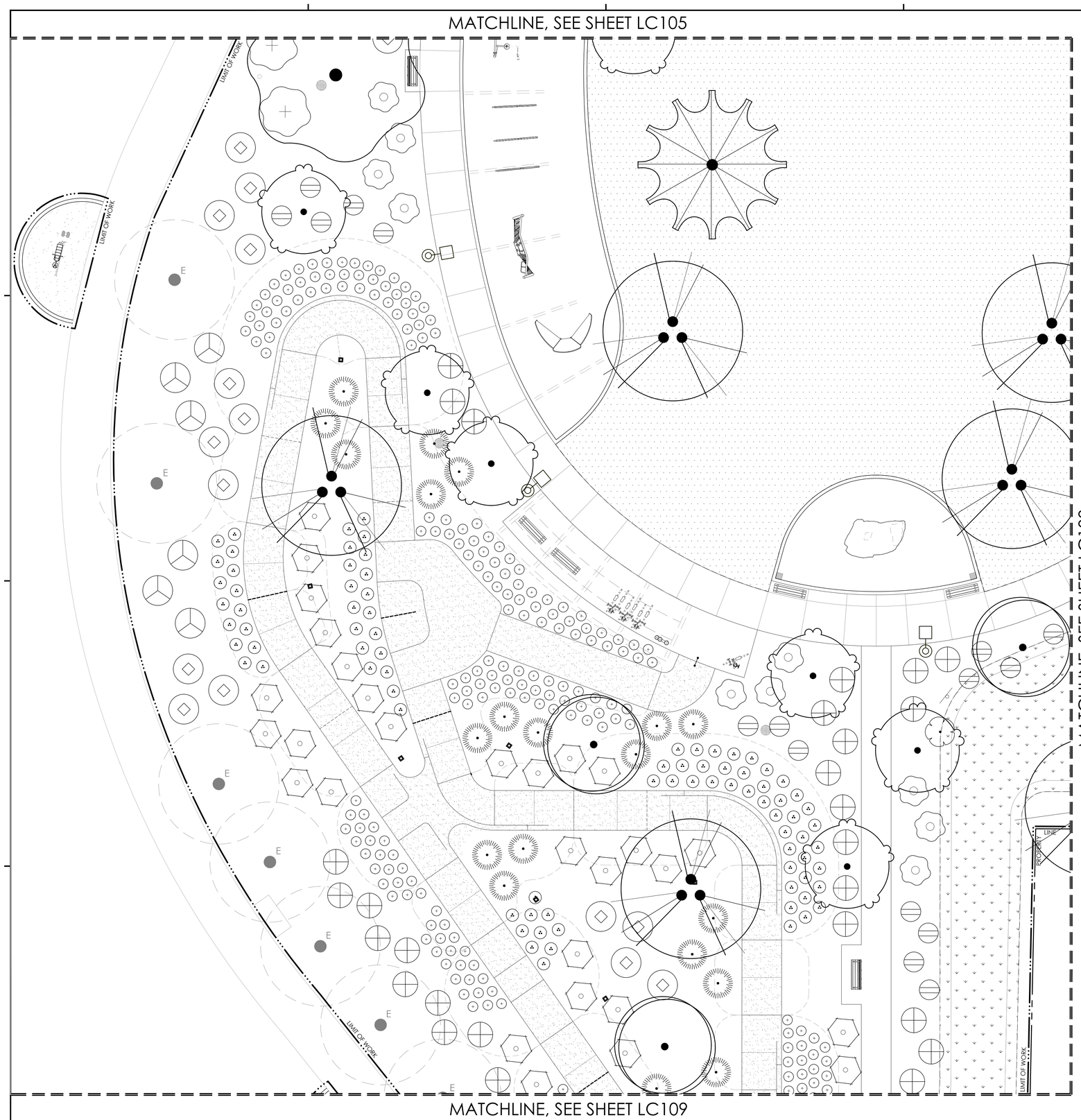

PLANT SCHEDULE

SYMBOL	BOTANICAL NAME	COMMON NAME
TREES		
	ARBUTUS 'MARINA' PER CITY OF PORTERVILLE STREET TREE LIST	STRAWBERRY TREE
	CEDRUS ATLANTICA 'GLAUCA' PER CITY OF PORTERVILLE STREET TREE LIST	BLUE ATLAS CEDAR
	CEDRUS DEODARA	DEODAR CEDAR
	CERCIDIUM X 'DESERT MUSEUM' PER CITY OF PORTERVILLE STREET TREE LIST	DESERT MUSEUM PALO VERDE MULTI-TRUNK
	PINUS ELDARICA PER CITY OF PORTERVILLE STREET TREE LIST	AFGHAN PINE
	PISTACIA CHINENSIS PER CITY OF PORTERVILLE STREET TREE LIST	CHINESE PISTACHE
	PLATANUS RACEMOSA	CALIFORNIA SYCAMORE
	PRUNUS CERASIFERA 'KRAUTER VESUVIUS' PER CITY OF PORTERVILLE STREET TREE LIST	KRAUTER VESUVIUS PURPLE-LEAF PLUM
	QUERCUS LOBATA PER CITY OF PORTERVILLE STREET TREE LIST	VALLEY OAK
	QUERCUS SUBER PER CITY OF PORTERVILLE STREET TREE LIST	CORK OAK
	SEARSIA LANCEA	AFRICAN SUMAC MULTI-TRUNK
	ULMUS WILSONIANA 'PROSPECTOR' PER CITY OF PORTERVILLE STREET TREE LIST	SIBERIAN ELM
	X CHITALPA TASHKENTENSIS 'PINK DAWN' PER CITY OF PORTERVILLE STREET TREE LIST	PINK DAWN CHITALPA MULTI-TRUNKED
	X CUPRESSOCYPARIS LEYLANDII PER CITY OF PORTERVILLE STREET TREE LIST	LEYLAND CYPRESS
SHRUBS		
	ARCTOSTAPHYLOS X 'SUNSET'	SUNSET MANZANITA
	BACCHARIS PILULARIS 'PIGEON POINT'	PIGEON POINT COYOTE BRUSH
	BOUTELOUA GRACILIS 'BLONDE AMBITION'	BLUE GRAMA
	CAREX TUMULICOLA	FOOTHILL SEDGE
	CARPENTERIA CALIFORNICA	BUSH ANEMONE
	CEANOTHUS X 'CONCHA'	CONCHA WILD LILAC
	CHONDROPETALUM ELEPHANTINUM	LARGE CAPE RUSH
	CHONDROPETALUM TECTORUM 'EL CAMPO'	EL CAMPO CAPE RUSH
	CISTUS X 'SUNSET'	MAGENTA ROCKROSE
	DENDROMECON HARFORDII	BUSH POPPY
	FEIJOA SELLOWIANA	PINEAPPLE GUAVA
	FREMONTODENDRON X 'KEN TAYLOR'	KEN TAYLOR FLANNEL BUSH
	HESPERALOE PARVIFLORA	RED YUCCA
	HETEROMELES ARBUTIFOLIA	TOYON
	JUNCUS PATENS 'ELK BLUE'	SPREADING RUSH
	LAURUS NOBILIS SHRUB/COLUMN FORM	SWEET BAY
	LOBELIA LAXIFLORA ANGUSTIFOLIA	MEXICAN LOBELIA
	MUHLENBERGIA DUBIA	PINE MUHLY
	MUHLENBERGIA RIGENS	DEER GRASS
	OLEA EUROPAEA 'MONTRA'	LITTLE OLLIE® OLIVE
	PEROVSKIA ATRIPLICIFOLIA 'BLUE SPIRE'	BLUE SPIRE RUSSIAN SAGE
	RHAMNUS CALIFORNICA	CALIFORNIA COFFEEBERRY
	ROSMARINUS OFFICINALIS 'HUNTINGTON CARPET'	DWARF ROSEMARY
	SALVIA LEUCOPHYLLA 'BEES BLISS'	BEE'S BLISS PURPLE SAGE

SYMBOL	BOTANICAL NAME	COMMON NAME
GROUND COVERS		
	BIORETENTION HYDROSEED	CA NATIVE BIOFILTER SEED MIX
	BOUTELOUA GRACILIS 'BLONDE AMBITION'	BLONDE AMBITION BLUE GRAMA
	CAREX PANSA	SAND DUNE SEDGE
	TURF SOD	CELEBRATION BERMUDA GRASS

PLANTING NOTES

FOR GENERAL PLANTING NOTES AND PLANT SCHEDULE, SEE SHEET LP001.

0 5 10 20 30 feet

1"=10'

rrm design group
rrmdesign.com | (805) 543-1794
3765 SOUTH HIGUERA STREET, SUITE 102
SAN LUIS OBISPO, CA 93401

THE INCLUDED DRAWINGS, SPECIFICATIONS, IDEAS, DESIGNS AND ARRANGEMENTS REPRESENTED THEREIN ARE AND SHALL REMAIN THE PROPERTY OF RRM DESIGN GROUP. THEY ARE NOT TO BE USED IN WHOLE OR IN PART FOR ANY PURPOSE NOT SPECIFIED IN CONNECTION WITH ANY WORK OR PROJECT OTHER THAN THE SPECIFIED PROJECT FOR WHICH THEY HAVE BEEN PREPARED AND DEVELOPED WITHOUT THE WRITTEN CONSENT OF RRM DESIGN GROUP. VISUAL CONTACT WITH THESE DRAWINGS AND SPECIFICATIONS SHALL CONSTITUTE PROOF OF ACCEPTANCE OF THE ABOVE RESTRICTIONS. SUBMITTAL OF THESE DOCUMENTS FOR PUBLIC AGENCY REVIEW SHALL NOT BE CONSIDERED A WAIVER OF RRM DESIGN GROUP'S RIGHTS.
RRM DESIGN GROUP COPYRIGHT 2024.
RRM IS A CALIFORNIA CORPORATION

LICENSED LANDSCAPE ARCHITECT
LANCE WIERSCHEM LIC. 4210
SIGNATURE
07.31.2026
EXPIRATION DATE
DATE
STATE OF CALIFORNIA

CONSULTANT

AGENCY

FOURTH ST COMMUNITY CENTER AND PARK
HENDERSON AVE., PORTERVILLE, CA 93257

PLANTING PLAN

NO.	REVISION	DATE

PLAN CHECK REVISION 2

PROJECT MANAGER
LW

DRAWN BY DK
CHECKED BY LW

DATE
2024.09.19

PROJECT NUMBER
2883-01-RC22

SHEET
LP107

N:\2800\2883-01-RC22-Porterville-Fourth-St-Park-Design\Landscape-Architecture\Task-L2-ConDocs\Sheet-Files\LP-2883-01.dwg, LP107, Sep 24, 2024 5:42pm, LDWierschem

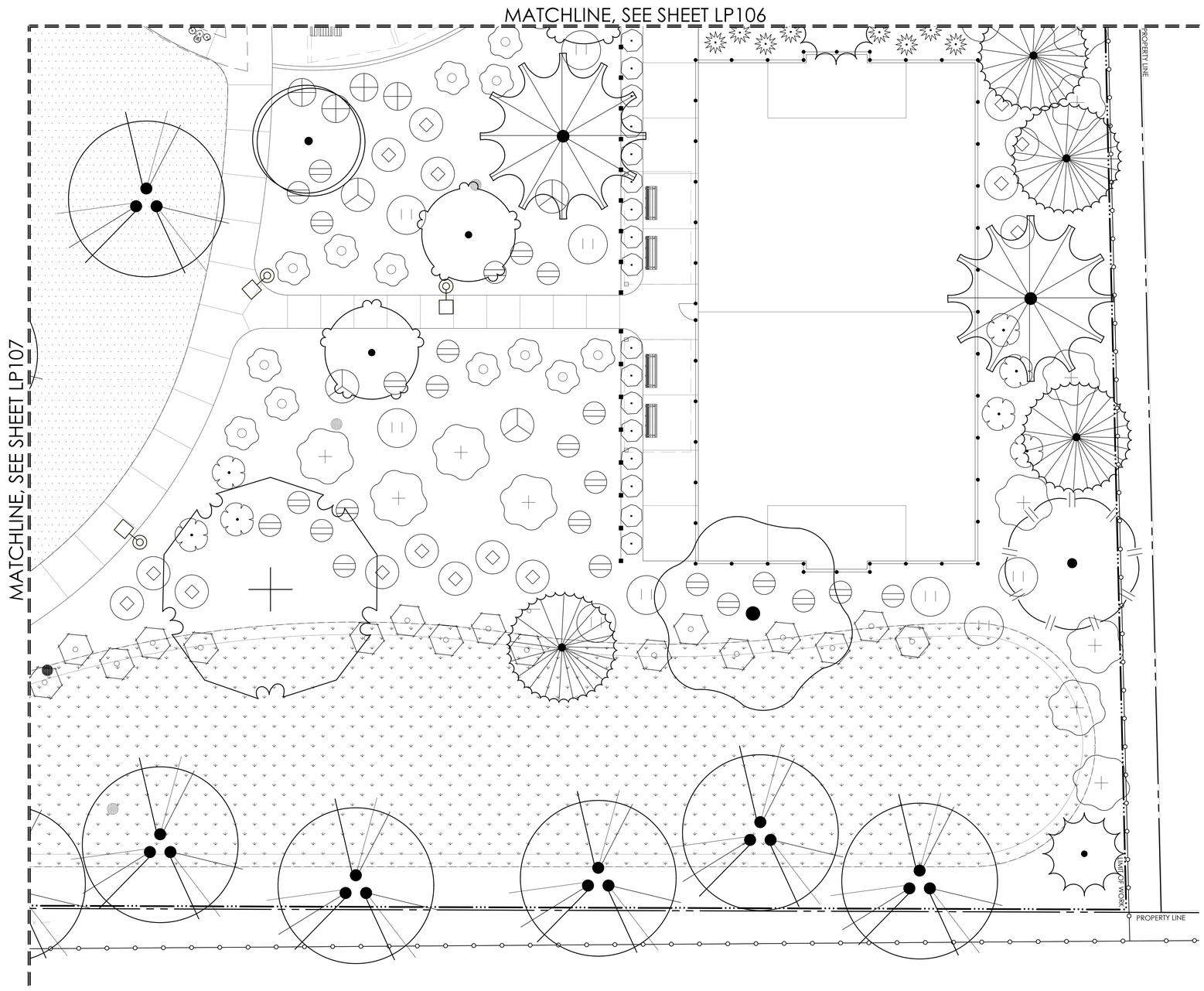

PLANT SCHEDULE

SYMBOL	BOTANICAL NAME	COMMON NAME
TREES		
	ARBUTUS 'MARINA' PER CITY OF PORTERVILLE STREET TREE LIST	STRAWBERRY TREE
	CEDRUS ATLANTICA 'GLAUCA' PER CITY OF PORTERVILLE STREET TREE LIST	BLUE ATLAS CEDAR
	CEDRUS DEODARA	DEODAR CEDAR
	CERCIDIUM X 'DESERT MUSEUM' PER CITY OF PORTERVILLE STREET TREE LIST	DESERT MUSEUM PALO VERDE MULTI-TRUNK
	PINUS ELDARICA PER CITY OF PORTERVILLE STREET TREE LIST	AFGHAN PINE
	PISTACIA CHINENSIS PER CITY OF PORTERVILLE STREET TREE LIST	CHINESE PISTACHE
	PLATANUS RACEMOSA	CALIFORNIA SYCAMORE
	PRUNUS CERASIFERA 'KRAUTER VESUVIUS' PER CITY OF PORTERVILLE STREET TREE LIST	KRAUTER VESUVIUS PURPLE-LEAF PLUM
	QUERCUS LOBATA PER CITY OF PORTERVILLE STREET TREE LIST	VALLEY OAK
	QUERCUS SUBER PER CITY OF PORTERVILLE STREET TREE LIST	CORK OAK
	SEARSIA LANCEA	AFRICAN SUMAC MULTI-TRUNK
	ULMUS WILSONIANA 'PROSPECTOR' PER CITY OF PORTERVILLE STREET TREE LIST	SIBERIAN ELM
	X CHITALPA TASHKENTENSIS 'PINK DAWN' PER CITY OF PORTERVILLE STREET TREE LIST	PINK DAWN CHITALPA MULTI-TRUNKED
	X CUPRESSOCYPARIS LEYLANDII PER CITY OF PORTERVILLE STREET TREE LIST	LEYLAND CYPRESS
SHRUBS		
	ARCTOSTAPHYLOS X 'SUNSET'	SUNSET MANZANITA
	BACCHARIS PILULARIS 'PIGEON POINT'	PIGEON POINT COYOTE BRUSH
	BOUTELOUA GRACILIS 'BLONDE AMBITION'	BLUE GRAMA
	CAREX TUMULICOLA	FOOTHILL SEDGE
	CARPENTERIA CALIFORNICA	BUSH ANEMONE
	CEANOTHUS X 'CONCHA'	CONCHA WILD LILAC
	CHONDROPETALUM ELEPHANTINUM	LARGE CAPE RUSH
	CHONDROPETALUM TECTORUM 'EL CAMPO'	EL CAMPO CAPE RUSH
	CISTUS X 'SUNSET'	MAGENTA ROCKROSE
	DENDROMECON HARFORDII	BUSH POPPY
	FEIJOA SELLOWIANA	PINEAPPLE GUAVA
	FREMONTODENDRON X 'KEN TAYLOR'	KEN TAYLOR FLANNEL BUSH
	HESPERALOE PARVIFLORA	RED YUCCA
	HETEROMELES ARBUTIFOLIA	TOYON
	JUNCUS PATENS 'ELK BLUE'	SPREADING RUSH
	LAURUS NOBILIS SHRUB/COLUMN FORM	SWEET BAY
	LOBELIA LAXIFLORA ANGUSTIFOLIA	MEXICAN LOBELIA
	MUHLENBERGIA DUBIA	PINE MUHLY
	MUHLENBERGIA RIGENS	DEER GRASS
	OLEA EUROPAEA 'MONTRA'	LITTLE OLLIE® OLIVE
	PEROVSKIA ATRIPLICIFOLIA 'BLUE SPIRE'	BLUE SPIRE RUSSIAN SAGE
	RHAMNUS CALIFORNICA	CALIFORNIA COFFEEBERRY
	ROSMARINUS OFFICINALIS 'HUNTINGTON CARPET'	DWARF ROSEMARY
	SALVIA LEUCOPHYLLA 'BEES BLISS'	BEE'S BLISS PURPLE SAGE

SYMBOL	BOTANICAL NAME	COMMON NAME
GROUND COVERS		
	BIORETENTION HYDROSEED	CA NATIVE BIOFILTER SEED MIX
	BOUTELOUA GRACILIS 'BLONDE AMBITION'	BLONDE AMBITION BLUE GRAMA
	CAREX PANSA	SAND DUNE SEDGE
	TURF SOD	CELEBRATION BERMUDA GRASS

PLANTING NOTES

FOR GENERAL PLANTING NOTES AND PLANT SCHEDULE, SEE SHEET LP001.

0 5 10 20 30 feet

1"=10'

rrm design group
rrmdesign.com | (805) 543-1794
3765 SOUTH HIGUERA STREET, SUITE 102
SAN LUIS OBISPO, CA 93401

THE INCLUDED DRAWINGS, SPECIFICATIONS, IDEAS, DESIGNS AND ARRANGEMENTS REPRESENTED THEREBY ARE AND SHALL REMAIN THE PROPERTY OF RRM DESIGN GROUP. THEY ARE NOT TO BE USED IN WHOLE OR IN PART FOR ANY PURPOSE NOT SPECIFIED IN CONNECTION WITH ANY WORK OR PROJECT DESIGNED BY RRM DESIGN GROUP FOR THE PROJECT FOR WHICH THEY HAVE BEEN PREPARED AND DEVELOPED WITHOUT THE WRITTEN CONSENT OF RRM DESIGN GROUP. VISUAL CONTACT WITH THESE DRAWINGS AND SPECIFICATIONS SHALL CONSTITUTE PROOF OF ACCEPTANCE OF THESE RESTRICTIONS. SUBMITTAL OF THESE DOCUMENTS FOR PUBLIC AGENCY REVIEW SHALL NOT BE CONSIDERED A WAIVER OF RRM DESIGN GROUP'S RIGHTS.
RRM DESIGN GROUP COPYRIGHT 2024.
RRM IS A CALIFORNIA CORPORATION

LICENSED LANDSCAPE ARCHITECT
LANCE WIERSCHEM LIC. 4210
SIGNATURE
07.31.2026
EXPIRATION DATE
DATE
STATE OF CALIFORNIA

CONSULTANT

AGENCY

FOURTH ST COMMUNITY CENTER AND PARK

HENDERSON AVE., PORTERVILLE, CA 93257

PLANTING PLAN

NO.	REVISION	DATE

PLAN CHECK REVISION 2

PROJECT MANAGER
LW

DRAWN BY DK
CHECKED BY LW

DATE
2024.09.19

PROJECT NUMBER
2883-01-RC22

SHEET
LP108

N:\2800\2883-01-RC22-Porterville-Fourth-St-Park-Design\Landscape-Architecture\Task-L2-ConDocs\Sheet-Files\LP-2883-01.dwg, LP108, Sep 24, 2024 5:53pm, LDWierschem

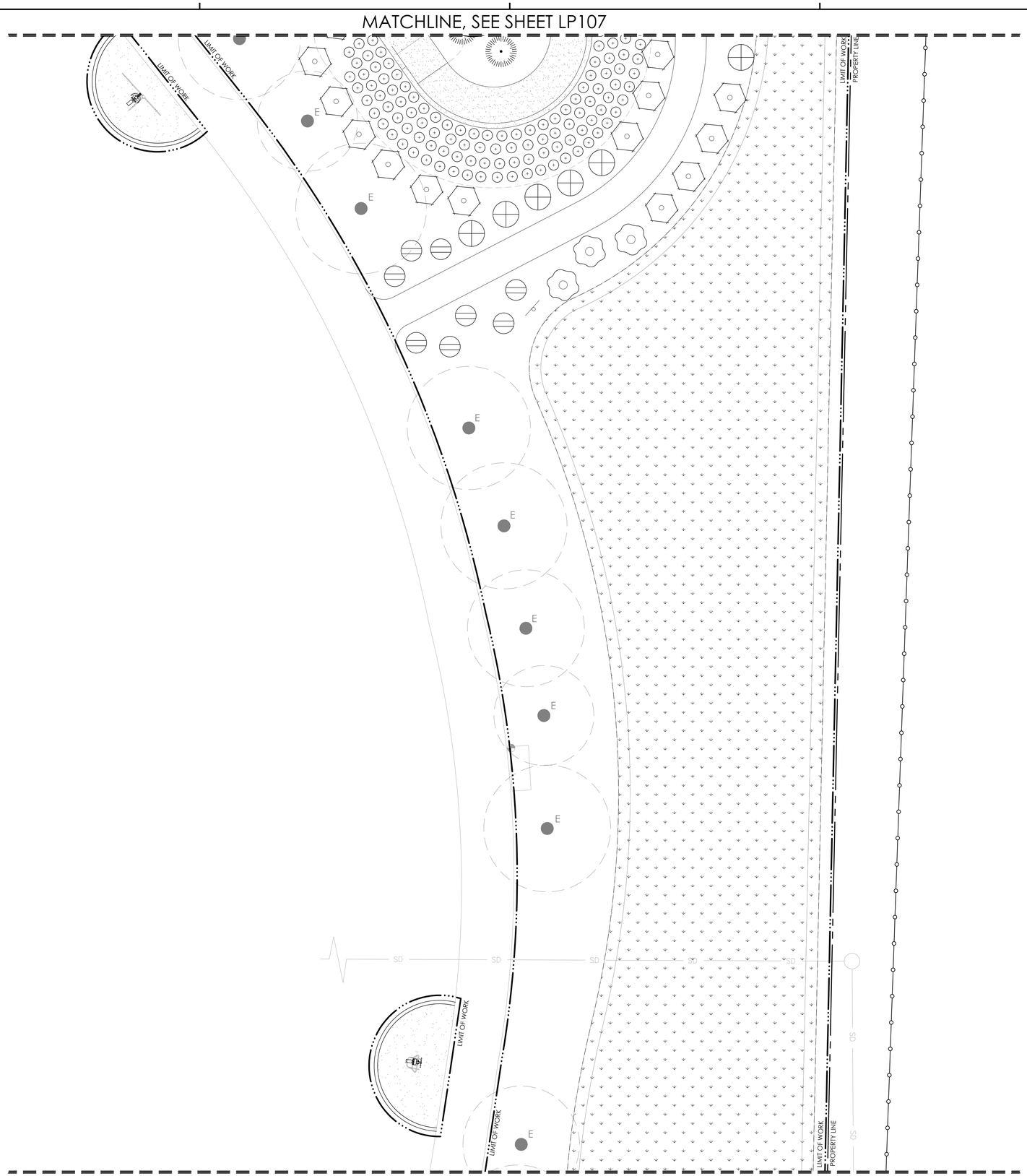

PLANT SCHEDULE

SYMBOL	BOTANICAL NAME	COMMON NAME
TREES		
	ARBUTUS 'MARINA' PER CITY OF PORTERVILLE STREET TREE LIST	STRAWBERRY TREE
	CEDRUS ATLANTICA 'GLAUCA' PER CITY OF PORTERVILLE STREET TREE LIST	BLUE ATLAS CEDAR
	CEDRUS DEODARA	DEODAR CEDAR
	CERCIDIUM X 'DESERT MUSEUM' PER CITY OF PORTERVILLE STREET TREE LIST	DESERT MUSEUM PALO VERDE MULTI-TRUNK
	PINUS ELDARICA PER CITY OF PORTERVILLE STREET TREE LIST	AFGHAN PINE
	PISTACIA CHINENSIS PER CITY OF PORTERVILLE STREET TREE LIST	CHINESE PISTACHE
	PLATANUS RACEMOSA	CALIFORNIA SYCAMORE
	PRUNUS CERASIFERA 'KRAUTER VESUVIUS' PER CITY OF PORTERVILLE STREET TREE LIST	KRAUTER VESUVIUS PURPLE-LEAF PLUM
	QUERCUS LOBATA PER CITY OF PORTERVILLE STREET TREE LIST	VALLEY OAK
	QUERCUS SUBER PER CITY OF PORTERVILLE STREET TREE LIST	CORK OAK
	SEARSIA LANCEA	AFRICAN SUMAC MULTI-TRUNK
	ULMUS WILSONIANA 'PROSPECTOR' PER CITY OF PORTERVILLE STREET TREE LIST	SIBERIAN ELM
	X CHITALPA TASHKENTENSIS 'PINK DAWN' PER CITY OF PORTERVILLE STREET TREE LIST	PINK DAWN CHITALPA MULTI-TRUNKED
	X CUPRESSOCYPARIS LEYLANDII PER CITY OF PORTERVILLE STREET TREE LIST	LEYLAND CYPRESS
SHRUBS		
	ARCTOSTAPHYLOS X 'SUNSET'	SUNSET MANZANITA
	BACCHARIS PILULARIS 'PIGEON POINT'	PIGEON POINT COYOTE BRUSH
	BOUTELOUA GRACILIS 'BLONDE AMBITION'	BLUE GRAMA
	CAREX TUMULICOLA	FOOTHILL SEDGE
	CARPENTERIA CALIFORNICA	BUSH ANEMONE
	CEANOTHUS X 'CONCHA'	CONCHA WILD LILAC
	CHONDROPETALUM ELEPHANTINUM	LARGE CAPE RUSH
	CHONDROPETALUM TECTORUM 'EL CAMPO'	EL CAMPO CAPE RUSH
	CISTUS X 'SUNSET'	MAGENTA ROCKROSE
	DENDROMECON HARFORDII	BUSH POPPY
	FEIJOA SELLOWIANA	PINEAPPLE GUAVA
	FREMONTODENDRON X 'KEN TAYLOR'	KEN TAYLOR FLANNEL BUSH
	HESPERALOE PARVIFLORA	RED YUCCA
	HETEROMELES ARBUTIFOLIA	TOYON
	JUNCUS PATENS 'ELK BLUE'	SPREADING RUSH
	LAURUS NOBILIS SHRUB/COLUMN FORM	SWEET BAY
	LOBELIA LAXIFLORA ANGUSTIFOLIA	MEXICAN LOBELIA
	MUHLENBERGIA DUBIA	PINE MUHLY
	MUHLENBERGIA RIGENS	DEER GRASS
	OLEA EUROPAEA 'MONTRA'	LITTLE OLLIE® OLIVE
	PEROVSKIA ATRIPLICIFOLIA 'BLUE SPIRE'	BLUE SPIRE RUSSIAN SAGE
	RHAMNUS CALIFORNICA	CALIFORNIA COFFEEBERRY
	ROSMARINUS OFFICINALIS 'HUNTINGTON CARPET'	DWARF ROSEMARY
	SALVIA LEUCOPHYLLA 'BEES BLISS'	BEE'S BLISS PURPLE SAGE

SYMBOL	BOTANICAL NAME	COMMON NAME
GROUND COVERS		
	BIORETENTION HYDROSEED	CA NATIVE BIOFILTER SEED MIX
	BOUTELOUA GRACILIS 'BLONDE AMBITION'	BLONDE AMBITION BLUE GRAMA
	CAREX PANSA	SAND DUNE SEDGE
	TURF SOD	CELEBRATION BERMUDA GRASS

PLANTING NOTES

FOR GENERAL PLANTING NOTES AND PLANT SCHEDULE, SEE SHEET LP001.

0 5 10 20 30 feet

1"=10'

rrm design group
rrmdesign.com | (805) 543-1794
3765 SOUTH HIGUERA STREET, SUITE 102
SAN LUIS OBISPO, CA 93401

THE INCLUDED DRAWINGS, SPECIFICATIONS, IDEAS, DESIGNS AND ARRANGEMENTS REPRESENTED THEREBY ARE AND SHALL REMAIN THE PROPERTY OF RRM DESIGN GROUP. THEY ARE NOT TO BE USED IN WHOLE OR IN PART FOR ANY PURPOSE NOT SPECIFIED IN WRITING BY RRM DESIGN GROUP. THIS DRAWING IS TO BE USED ONLY FOR THE PROJECT FOR WHICH THEY HAVE BEEN PREPARED AND DEVELOPED. WITHOUT THE WRITTEN CONSENT OF RRM DESIGN GROUP, VISUAL CONTACT WITH THESE DRAWINGS OR OTHER PROPERTY RIGHTS SHALL NOT CONSTITUTE EVIDENCE OF ACCEPTANCE OF RESTRICTIONS. SUBMITTAL OF THESE DOCUMENTS FOR PUBLIC AGENCY REVIEW SHALL NOT BE CONSIDERED A WAIVER OF RRM DESIGN GROUP'S RIGHTS.
RRM DESIGN GROUP COPYRIGHT 2024.
RRM IS A CALIFORNIA CORPORATION

LICENSED LANDSCAPE ARCHITECT
LANCE WIERSCHEM LIC. 4210
SIGNATURE
07.31.2026
EXPIRATION DATE
DATE
STATE OF CALIFORNIA

CONSULTANT

AGENCY

FOURTH ST COMMUNITY CENTER AND PARK

HENDERSON AVE., PORTERVILLE, CA 93257

PLANTING PLAN

NO.	REVISION	DATE

PLAN CHECK REVISION 2

PROJECT MANAGER	LW
DRAWN BY	DK
CHECKED BY	LW
DATE	2024.09.19
PROJECT NUMBER	2883-01-RC22
SHEET	LP109

N:\2800\2883-01-RC22-Porterville-Fourth-St-Park-Design\Landscape-Architecture\Task-L2-ConDocs\Sheet-Files\LP-2883-01.dwg, LP109, Sep 24, 2024 6:03pm, LDWierschem

MATCHLINE, SEE SHEET LP109

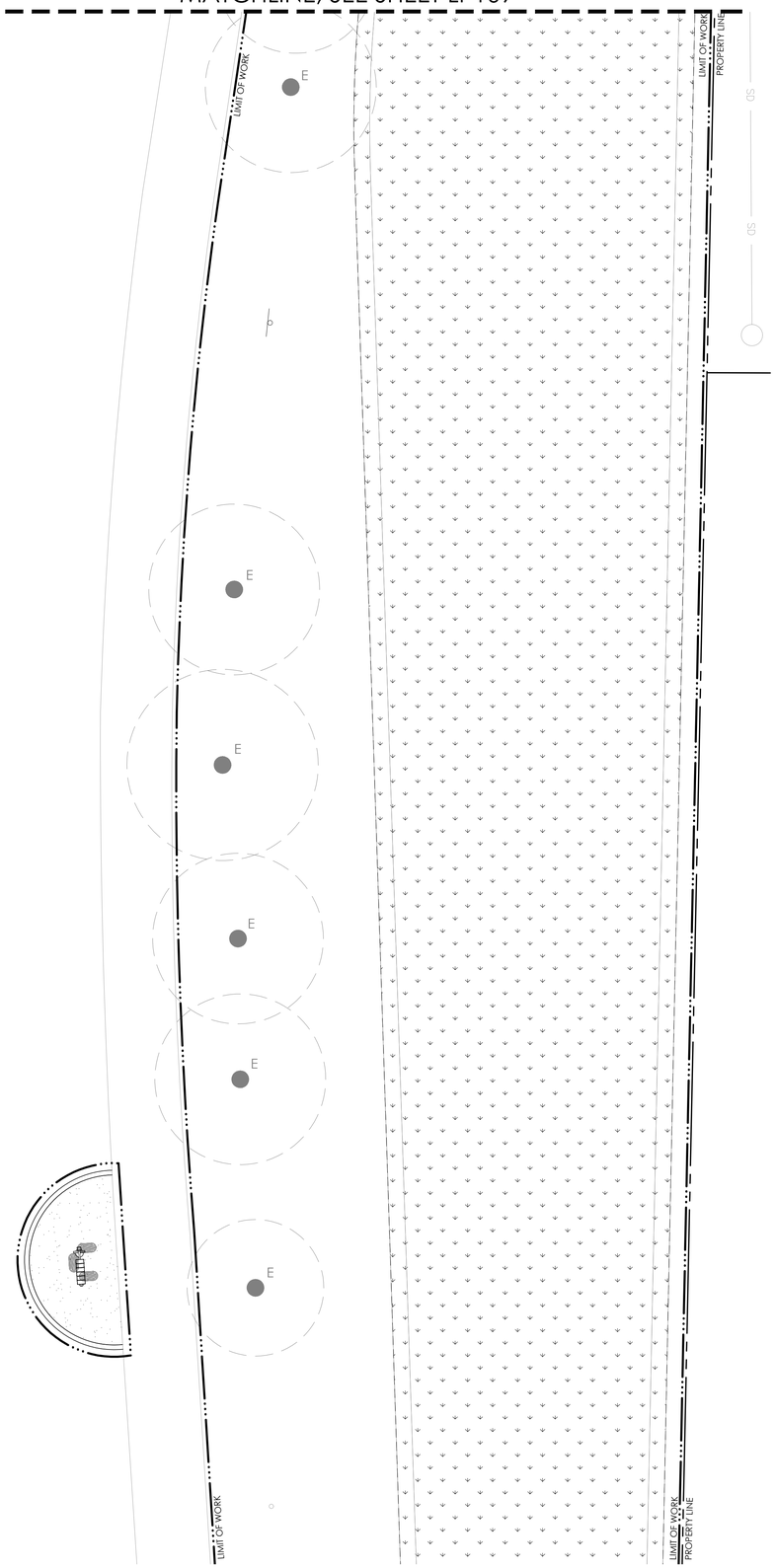

MATCHLINE, SEE CONTINUATION (RIGHT)

MATCHLINE, SEE CONTINUATION (LEFT)

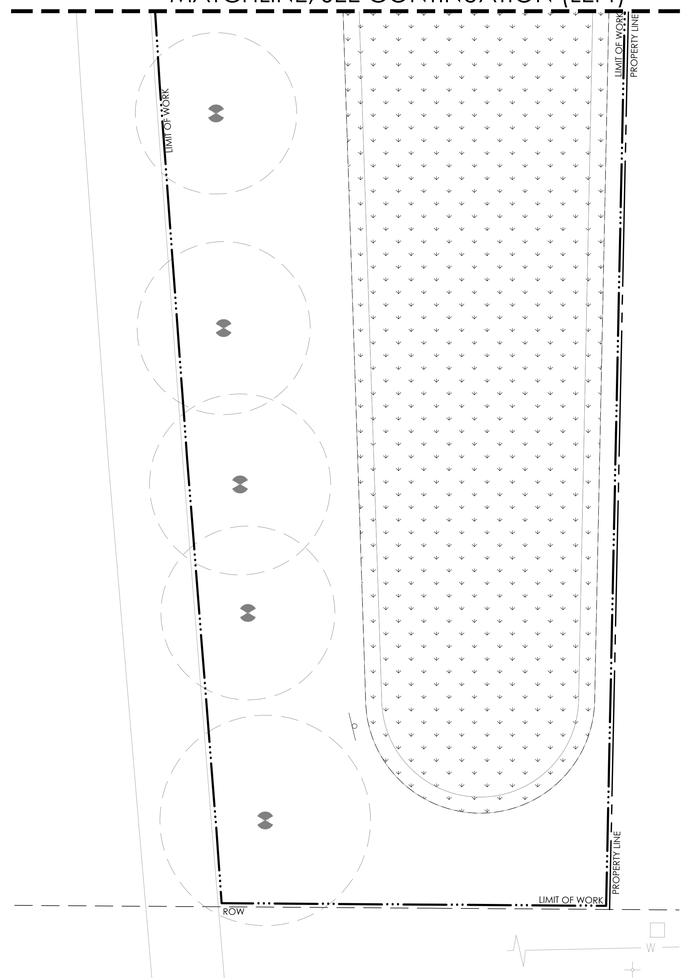

PLANT SCHEDULE

SYMBOL	BOTANICAL NAME	COMMON NAME
TREES		
	ARBUTUS 'MARINA' PER CITY OF PORTERVILLE STREET TREE LIST	STRAWBERRY TREE
	CEDRUS ATLANTICA 'GLAUCA' PER CITY OF PORTERVILLE STREET TREE LIST	BLUE ATLAS CEDAR
	CEDRUS DEODARA	DEODAR CEDAR
	CERCIDIUM X 'DESERT MUSEUM' PER CITY OF PORTERVILLE STREET TREE LIST	DESERT MUSEUM PALO VERDE MULTI-TRUNK
	PINUS ELDARICA PER CITY OF PORTERVILLE STREET TREE LIST	AFGHAN PINE
	PISTACIA CHINENSIS PER CITY OF PORTERVILLE STREET TREE LIST	CHINESE PISTACHE
	PLATANUS RACEMOSA	CALIFORNIA SYCAMORE
	PRUNUS CERASIFERA 'KRAUTER VESUVIUS' PER CITY OF PORTERVILLE STREET TREE LIST	KRAUTER VESUVIUS PURPLE-LEAF PLUM
	QUERCUS LOBATA PER CITY OF PORTERVILLE STREET TREE LIST	VALLEY OAK
	QUERCUS SUBER PER CITY OF PORTERVILLE STREET TREE LIST	CORK OAK
	SEARSIA LANCEA	AFRICAN SUMAC MULTI-TRUNK
	ULMUS WILSONIANA 'PROSPECTOR' PER CITY OF PORTERVILLE STREET TREE LIST	SIBERIAN ELM
	X CHITALPA TASHKENTENSIS 'PINK DAWN' PER CITY OF PORTERVILLE STREET TREE LIST	PINK DAWN CHITALPA MULTI-TRUNKED
	X CUPRESSOCYPARIS LEYLANDII PER CITY OF PORTERVILLE STREET TREE LIST	LEYLAND CYPRESS
SHRUBS		
	ARCTOSTAPHYLOS X 'SUNSET'	SUNSET MANZANITA
	BACCHARIS PILULARIS 'PIGEON POINT'	PIGEON POINT COYOTE BRUSH
	BOUTELOUA GRACILIS 'BLONDE AMBITION'	BLUE GRAMA
	CAREX TUMULICOLA	FOOTHILL SEDGE
	CARPENTERIA CALIFORNICA	BUSH ANEMONE
	CEANOTHUS X 'CONCHA'	CONCHA WILD LILAC
	CHONDROPETALUM ELEPHANTINUM	LARGE CAPE RUSH
	CHONDROPETALUM TECTORUM 'EL CAMPO'	EL CAMPO CAPE RUSH
	CISTUS X 'SUNSET'	MAGENTA ROCKROSE
	DENDROMECON HARFORDII	BUSH POPPY
	FEIJOA SELLOWIANA	PINEAPPLE GUAVA
	FREMONTODENDRON X 'KEN TAYLOR'	KEN TAYLOR FLANNEL BUSH
	HESPERALOE PARVIFLORA	RED YUCCA
	HETEROMELES ARBUTIFOLIA	TOYON
	JUNCUS PATENS 'ELK BLUE'	SPREADING RUSH
	LAURUS NOBILIS SHRUB/COLUMN FORM	SWEET BAY
	LOBELIA LAXIFLORA ANGUSTIFOLIA	MEXICAN LOBELIA
	MUHLENBERGIA DUBIA	PINE MUHLY
	MUHLENBERGIA RIGENS	DEER GRASS
	OLEA EUROPAEA 'MONTRA'	LITTLE OLLIE® OLIVE
	PEROVSKIA ATRIPLICIFOLIA 'BLUE SPIRE'	BLUE SPIRE RUSSIAN SAGE
	RHAMNUS CALIFORNICA	CALIFORNIA COFFEEBERRY
	ROSMARINUS OFFICINALIS 'HUNTINGTON CARPET'	DWARF ROSEMARY
	SALVIA LEUCOPHYLLA 'BEES BLISS'	BEE'S BLISS PURPLE SAGE

SYMBOL	BOTANICAL NAME	COMMON NAME
GROUND COVERS		
	BIORETENTION HYDROSEED	CA NATIVE BIOFILTER SEED MIX
	BOUTELOUA GRACILIS 'BLONDE AMBITION'	BLONDE AMBITION BLUE GRAMA
	CAREX PANSA	SAND DUNE SEDGE
	TURF SOD	CELEBRATION BERMUDA GRASS

PLANTING NOTES

FOR GENERAL PLANTING NOTES AND PLANT SCHEDULE, SEE SHEET LP001.

0 5 10 20 30 feet

1"=10'

rrm design group

rrmdesign.com | (805) 543-1794

3765 SOUTH HIGUERA STREET, SUITE 102

SAN LUIS OBISPO, CA 93401

THE INCLUDED DRAWINGS, SPECIFICATIONS, IDEAS, DESIGNS AND ARRANGEMENTS REPRESENTED THEREBY ARE AND SHALL REMAIN THE PROPERTY OF RRM DESIGN GROUP AND SHALL NOT BE USED IN WHOLE OR IN PART FOR ANY PURPOSE NOT SPECIFICALLY AGREED ON CONTRACT WITH RRM WORK OF PERSUASIVE DESIGN. DRAWINGS THEREIN ARE PROJECT FOR WHICH THEY HAVE BEEN PREPARED AND DEVELOPED WITHOUT THE WRITTEN CONSENT OF RRM DESIGN GROUP. VISUAL CONTACT WITH THESE DRAWINGS AND ANY USE OF THEM OTHER THAN THE RECEIPT THEREOF DIRECTLY FROM RRM DESIGN GROUP IN ACCORDANCE WITH GOVERNMENT CODE SECTIONS 6250 ET SEQ. SUBMITTAL OF THESE DOCUMENTS FOR PUBLIC AGENCY REVIEW SHALL NOT BE CONSIDERED A WAIVER OF RRM DESIGN GROUP'S RIGHTS.

RRM DESIGN GROUP COPYRIGHT 2024.

RRM IS A CALIFORNIA CORPORATION

LICENSED LANDSCAPE ARCHITECT
LANCE WIERSCHEM LIC. 4210
SIGNATURE
07.31.2026
EXPIRATION DATE
DATE
STATE OF CALIFORNIA

CONSULTANT

AGENCY

FOURTH ST COMMUNITY CENTER AND PARK

HENDERSON AVE., PORTERVILLE, CA 93257

PLANTING PLAN

NO.	REVISION	DATE

PROJECT MANAGER
LW

DRAWN BY DK

CHECKED BY LW

DATE
2024.09.19

PROJECT NUMBER
2883-01-RC22

SHEET
LP110

PLAN CHECK REVISION 2

N:\2800\2883-01-RC22-Portervillle-Fourth-St-Park-Design\Landscape-Architecture\Task-L2-ConDocs\Sheet-Files\LP-2883-01.dwg, LP110, Sep 24, 2024 6:18pm, LDWierschem

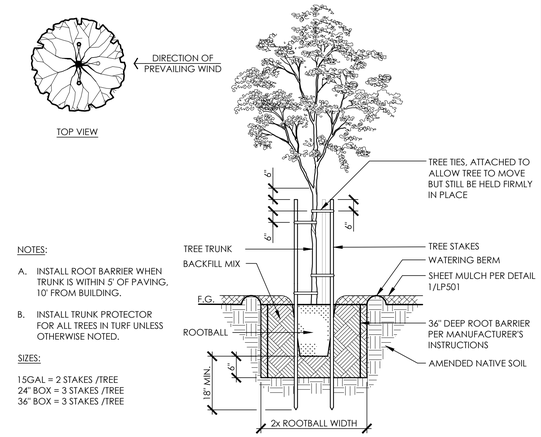

NOTES:

A. INSTALL ROOT BARRIER WHEN TRUNK IS WITHIN 5' OF PAVING, 10' FROM BUILDING.

B. INSTALL TRUNK PROTECTOR FOR ALL TREES IN TURF UNLESS OTHERWISE NOTED.

SIZES:

15GAL = 2 STAKES /TREE
24" BOX = 3 STAKES /TREE
36" BOX = 3 STAKES /TREE

3 TREE PLANTING WITH WOOD STAKING

1/2" = 1'-0" RRM-2800-2883.01-12

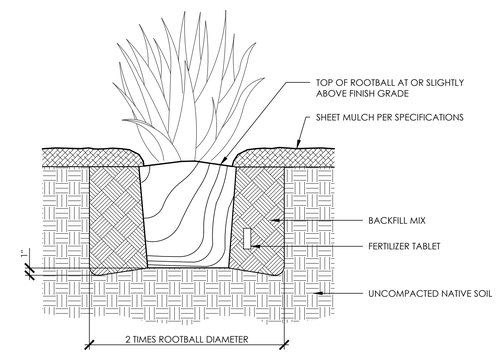

2 SHRUB PLANTING

1 1/2" = 1'-0" RRM-2800-2883.01-05

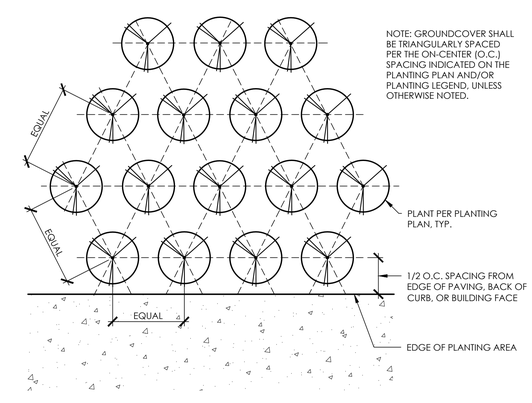

1 GROUNDCOVER SPACING

1 1/2" = 1'-0" RRM-2800-2883.01-11

rrm design group
rrmdesign.com | (805) 543-1794
3765 SOUTH HIGUERA STREET, SUITE 102
SAN LUIS OBISPO, CA 93401

THE INCLUDED DRAWINGS, SPECIFICATIONS, IDEAS, DESIGNS AND ARRANGEMENTS REPRESENTED THEREBY ARE AND SHALL REMAIN THE PROPERTY OF RRM DESIGN GROUP AND NO PART THEREOF SHALL BE COPIED, DISCLOSED TO OTHERS OR USED IN CONNECTION WITH ANY WORK OR PROJECT OTHER THAN THE SPECIFIED PROJECT FOR WHICH THEY HAVE BEEN PREPARED AND DEVELOPED WITHOUT THE WRITTEN CONSENT OF RRM DESIGN GROUP. VISUAL CONTACT WITH THESE DRAWINGS OR SPECIFICATIONS SHALL CONSTITUTE CONCLUSIVE EVIDENCE OF ACCEPTANCE OF THESE RESTRICTIONS. SUBMITTAL OF THESE DOCUMENTS FOR PUBLIC AGENCY REVIEW SHALL NOT BE CONSIDERED A WAIVER OF RRM DESIGN GROUP'S RIGHTS.
RRM DESIGN GROUP COPYRIGHT 2024.
RRM IS A CALIFORNIA CORPORATION

LICENSED LANDSCAPE ARCHITECT
LANCE WIERSCHEM LIC. #6210
SIGNATURE
07.31.2026
EXPIRATION DATE
DATE
STATE OF CALIFORNIA

CONSULTANT

AGENCY

FOURTH ST COMMUNITY CENTER AND PARK
HENDERSON AVE., PORTERVILLE, CA 93257

PLANTING DETAILS

NO.	REVISION	DATE
△		
△		
△		
△		
△		
△		

PROJECT MANAGER: LW
DRAWN BY: DK
CHECKED BY: LW
DATE: 2024.09.19
PROJECT NUMBER: 2883-01-RC22
SHEET: LP501

PLAN CHECK REVISION 2

N:\2800\2883-01-RC22-Porterville-Fourth-St-Park-Design\Landscape-Architecture\Task-L2-ConDocs\Sheet-Files\LP-2883-01.dwg, LP501, Sep 24, 2024 6:18pm, LDWierschem

FOURTH STREET PARK PUMPTRACK

GENERAL PUMPTRACK CONSTRUCTION NOTES

GENERAL NOTES

1. CONTRACTOR SHALL VERIFY AND COORDINATE FINISH GRADES WITH SITE CONDITIONS. CONTRACTOR SHALL IMMEDIATELY REPORT ANY CONFLICTS OR DISCREPANCIES TO THE OWNER'S REPRESENTATIVE AND THE PUMPTRACK DESIGNER.
2. CONTRACTOR SHALL BE RESPONSIBLE FOR REMOVING ANY RAIN WATER OR DEBRIS FROM THE PROJECT SITE, AS NEEDED, DURING CONSTRUCTION AND PRIOR TO PLACING ANY BASE MATERIAL OR ASPHALT PAVEMENT WITHIN ANY AREA.
3. THE CONTRACTOR SHALL BE RESPONSIBLE FOR CONFIRMING GROUND ELEVATIONS, PIPE INVERTS, SITE UTILITIES AND OVERALL TOPOGRAPHY OF THE SITE, AS WELL AS, ALL SITE DIMENSIONS PRIOR TO START OF CONSTRUCTION. THE CONTRACTOR SHALL IMMEDIATELY NOTIFY THE OWNER'S REPRESENTATIVE AND THE PUMPTRACK DESIGNER IN WRITING OF ANY DIFFERENCES IN TOPOGRAPHY OR SITE DIMENSIONS THAT DIFFER FROM THOSE SHOWN ON THE PLANS.
4. THE CONTRACTOR SHALL ESTIMATE EARTHWORK QUANTITIES PRIOR TO START OF CONSTRUCTION. CONTRACTOR SHALL ARRANGE FOR IMPORT OR EXPORT OF SOIL MATERIALS AS REQUIRED TO COMPLETE THE GRADING AS SHOWN ON THE PLANS. NO ADDITIONAL COMPENSATION SHALL BE MADE FOR ANY EXPORT OR IMPORT REQUIRED.
5. THE CONTRACTOR IS RESPONSIBLE FOR MATCHING EXISTING IMPROVEMENTS WITH A SMOOTH TRANSITION TO EXISTING GRADES AND TO AVOID ANY ABRUPT OR APPARENT CHANGES IN GRADES OR CROSS SLOPES, LOW SPOTS OR OTHER CASES WHICH MAY CAUSE HAZARDOUS CONDITIONS.
6. WRITTEN DIMENSIONS ARE TO TAKE PRECEDENCE OVER SCALED DIMENSIONS. NOTIFY OWNER'S REPRESENTATIVE AND PUMPTRACK DESIGNER OF ANY DISCREPANCIES FOUND IN THE FIELD.
7. THE CONTRACTOR SHALL NOTIFY UNDERGROUND SERVICE ALERT AT LEAST 48 HOURS PRIOR TO ANY EXCAVATION ON THIS PROJECT (U.S.A. AT 800-227-2600).
8. ALL WORK SHALL COMPLY WITH THE PROJECT GEOTECHNICAL REPORT. IF DISCEPANCIES OCCUR BETWEEN PLANS/SPECIFICATIONS AND GEOTECHNICAL REPORT, GEOTECHNICAL REPORT SHALL PREVAIL. CONTACT OWNER'S REPRESENTATIVE IMMEDIATELY.
9. CONTRACTOR SHALL OBTAIN WRITTEN APPROVAL FROM THE OWNER'S REPRESENTATIVE FOR ANY CHANGES TO THE PROJECT LAYOUT OR DESIGN. ANY CHANGES OR DEVIATIONS WITHOUT WRITTEN APPROVAL BY THE OWNER'S REPRESENTATIVE SHALL ABSOLVE THE OWNER AND PROJECT DESIGNER OF ANY AND ALL RESPONSIBILITY OF SAID CHANGE OR DEVIATION.

BEST MANAGEMENT PRACTICES

1. BEST MANAGEMENT PRACTICES (BMP'S) (MATERIALS AND THEIR INSTALLATION) SHALL BE IN ACCORDANCE WITH STATE AND LOCAL REQUIREMENTS.
3. EXPOSED SOIL SHALL BE PROTECTED FROM EROSION AT ALL TIMES. HAY BALES, FILTER BERMS, BIOSWALES OR OTHER MEANS SHALL BE EMPLOYED TO PREVENT TURBID RUNOFF TO THE DRAINAGE AREA OR TO ADJOINING PROPERTIES. THESE MEASURES ARE INTENDED TO BE USED FOR INTERIM EROSION AND SEDIMENT WATER POLLUTION CONTROL ONLY AND ARE NOT TO BE USED FOR FINAL ELEVATIONS OR PERMANENT IMPROVEMENTS.
4. CONTRACTOR SHALL BE RESPONSIBLE FOR MONITORING EROSION AND SEDIMENT CONTROL PRIOR TO, DURING, AND AFTER STORM EVENTS, AND SHALL PROMPTLY CORRECT ANY DEFICIENCIES NOTED.
5. ANY EXCESS MATERIAL SHALL BE DISPOSED OF OFF-SITE OR STOCKPILED IN A MANNER TO AVOID RUNOFF ONTO ADJOINING PROPERTIES.
6. ESTABLISH AND MAINTAIN EFFECTIVE PERIMETER CONTROLS AND STABILIZE ALL CONSTRUCTION ENTRANCES AND EXITS TO SUFFICIENTLY CONTROL EROSION AND SEDIMENT DISCHARGES FROM THE SITE
7. CONTRACTOR SHALL BE RESPONSIBLE FOR THE PROPER HANDLING OF STORM WATER, INCLUDING DEWATERING, AND DEBRIS REMOVAL FROM THE PROJECT SITE, AS NEEDED, DURING CONSTRUCTION AND PRIOR TO PLACING ANY ASPHALT PAVING.

ABBREVIATIONS

@	AT	HORIZ.	HORIZONTAL	TC	TOP OF CURB
ALT.	ALTERNATE	I.D.	INSIDE DIAMETER	TD	TOP OF DRAIN
BETW.	BETWEEN	O.D.	OUTER DIAMETER	THK.	THICK
BOT.	BOTTOM	INV. EL.	INVERT ELEVATION	TF	TOP OF FENCE
℄	CENTERLINE	LF	LINEAR FEET	TW	TOP OF WALL
CJ	COLD JOINT	LM	LINEAR METER	TYP.	TYPICAL
CONC.	CONCRETE	MAX.	MAXIMUM	VERT.	VERTICAL
CONT.	CONTINUOUS	MIN.	MINIMUM	W/	WITH
DD	DECK DRAIN	(N)	NEW		
Ø	DIAMETER	N/ A	NOT APPLICABLE		
EA.	EACH	N.I.C.	NOT IN CONTRACT		
EJ	EXPANSION JOINT	N.T.S.	NOT TO SCALE		
(E)	EXISTING	O.C.	ON CENTER		
FG	FINISH GRADE	RAD.	RADIUS		
FS	FINISH SURFACE	REBAR	STEEL REINFORCEMENT		
GALV.	GALVANIZED	RE	RIM ELEVATION		
HP	HIGH POINT	TP	TANGENT POINT		

X — DETAIL NUMBER
XX — SHEET NUMBER

SYMBOL LEGEND

LEGEND

SYMBOL	DESCRIPTION
	NON–RIDE, RETURN TO GRADE.
	PUMPTRACK LANE HIGH POINT.
	PUMPTRACK LANE LOW POINT.
	RIDE DIRECTION.
B	BLEND ZONE: BLEND BETWEEN MULTIPLE FEATURES.
	HORIZONTAL LAYOUT BENCHMARK.
+X.XX'	SPOT ELEVATIONS.
	MEET FLUSH WITH PEDESTRIAN CONCRETE.

INDEX OF SHEETS

NO.	SHEET	DESCRIPTION
1.	PT-1.0	PUMPTRACK GENERAL NOTES
2.	PT-2.0	PUMPTRACK CONSTRUCTION PLAN
3.	PT-3.0	PUMPTRACK LAYOUT PLAN
4.	PT-4.0	PUMPTRACK GRADING & DRAINAGE PLAN
5.	PT-5.0	PUMPTRACK MATERIALS PLAN
6.	PT-5.1	PUMPTRACK PAINTING PLAN
7.	PT-6.0	STANDARD PUMPTRACK DETAILS
8.	PT-7.0	PUMPTRACK DETAILS
9.	PT-7.1	PUMPTRACK DETAILS
10.	PT-7.2	PUMPTRACK DETAILS
11.	PT-7.3	PUMPTRACK DETAILS

rrm design group
rrmdesign.com | (805) 543-1794
3765 SOUTH HIGUERA STREET, SUITE 102
SAN LUIS OBISPO, CA 93401

THE INCLUDED DRAWINGS, SPECIFICATIONS, IDEAS, DESIGNS AND ARRANGEMENTS REPRESENTED THEREBY ARE AND SHALL REMAIN THE PROPERTY OF RRM DESIGN GROUP AND NO PART THEREOF SHALL BE COPIED, DISCLOSED TO OTHERS OR USED IN CONNECTION WITH ANY WORK OR PROJECT OTHER THAN THE SPECIFIC PROJECT FOR WHICH THEY HAVE BEEN PREPARED AND DEVELOPED WITHOUT THE WRITTEN CONSENT OF RRM DESIGN GROUP. VISUAL CONTACT WITH THESE DRAWINGS OR OTHERWISE OBTAINING OR RECEIVING INFORMATION FROM THESE DRAWINGS OR ANY PART THEREOF, BY ANY PERSON OR ENTITY, SUBMITTAL OF THESE DOCUMENTS FOR PUBLIC AGENCY REVIEW SHALL NOT BE CONSIDERED A WAIVER OF RRM DESIGN GROUP'S RIGHTS.
RRM DESIGN GROUP COPYRIGHT 2024.
RRM IS A CALIFORNIA CORPORATION

REGISTERED LANDSCAPE ARCHITECT
ZACHARY WORTHINGTON
No. 6095
Exp. 10/31/26
STATE OF CALIFORNIA

CONSULTANT
Wormhoudt INC

AGENCY

100% CONSTRUCTION DOCUMENTS

FOURTH ST COMMUNITY CENTER AND PARK
HENDERSON AVE., PORTERVILLE, CA 93257

PUMPTRACK GENERAL NOTES

NO.	REVISION	DATE
1	PLAN CHECK REVISION 1	05/17/24

PROJECT MANAGER

DRAWN BY: BR / KM
CHECKED BY: ZW

DATE: 2024.05.17

PROJECT NUMBER: 2883-01-RC22

SHEET: PT-1.0

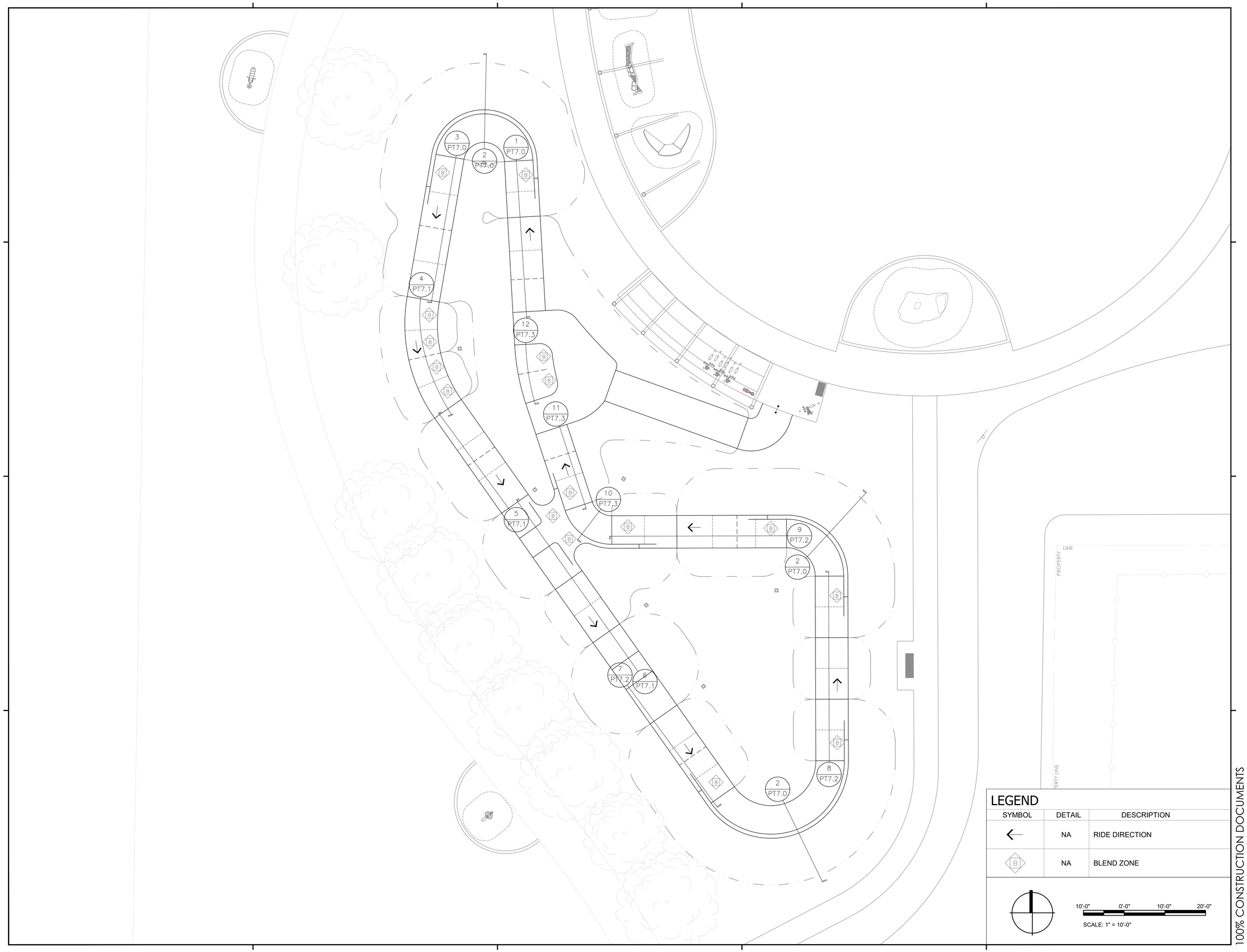

LEGEND

SYMBOL	DETAIL	DESCRIPTION
←	NA	RIDE DIRECTION
B	NA	BLEND ZONE

10'-0" 0'-0" 10'-0" 20'-0"

SCALE: 1" = 10'-0"

100% CONSTRUCTION DOCUMENTS

rrm design group

rrmdesign.com | (805) 543-1794
3765 SOUTH HIGUERA STREET, SUITE 102
SAN LUIS OBISPO, CA 93401

THE INCLUDED DRAWINGS, SPECIFICATIONS, IDEAS, DESIGNS AND ARRANGEMENTS REPRESENTED THEREBY ARE AND SHALL REMAIN THE PROPERTY OF RRM DESIGN GROUP AND NO PART THEREOF SHALL BE COPIED, DISCLOSED TO OTHERS OR USED IN CONNECTION WITH ANY WORK OR PROJECT OTHER THAN THE SPECIFIED PROJECT FOR WHICH THEY HAVE BEEN PREPARED AND DEVELOPED WITHOUT THE WRITTEN CONSENT OF RRM DESIGN GROUP. VISUAL CONTACT WITH THESE DRAWINGS OR SPECIFICATIONS SHALL CONSTITUTE PROOF OF SUBSCRIBER'S ACCEPTANCE OF RESTRICTIONS. SUBMITTAL OF THESE DOCUMENTS FOR PUBLIC AGENCY REVIEW SHALL NOT BE CONSIDERED A WAIVER OF RRM DESIGN GROUP'S RIGHTS.
RRM DESIGN GROUP COPYRIGHT 2024.
RRM IS A CALIFORNIA CORPORATION

REGISTERED LANDSCAPE ARCHITECT
ZACHARY WORTHOUDT
No. 6095
Exp. 10/31/26
STATE OF CALIFORNIA

CONSULTANT
Wormhoudt INC

AGENCY

FOURTH ST COMMUNITY CENTER AND PARK

HENDERSON AVE., PORTERVILLE, CA 93257

PUMPTRACK CONSTRUCTION PLAN

NO.	REVISION	DATE
1	PLAN CHECK REVISION 1	05/17/24

PROJECT MANAGER

DRAWN BY: BR / KM
CHECKED BY: ZW

DATE: 2024.05.17

PROJECT NUMBER: 2883-01-RC22

SHEET: PT-2.0

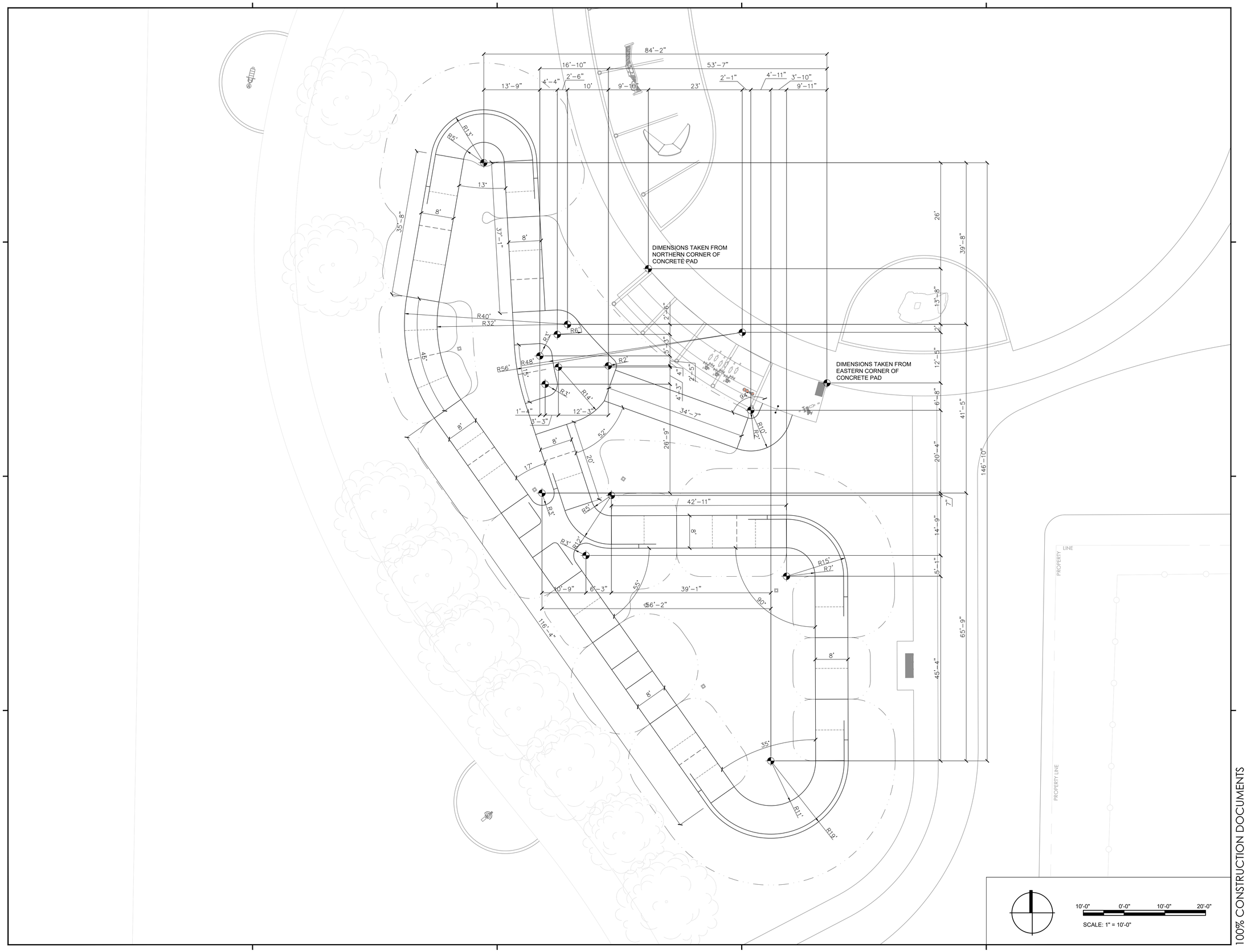

100% CONSTRUCTION DOCUMENTS

rrm design group

rrmdesign.com | (805) 543-1794
3765 SOUTH HIGUERA STREET, SUITE 102
SAN LUIS OBISPO, CA 93401

THE INCLUDED DRAWINGS, SPECIFICATIONS, IDEAS, DESIGNS AND ARRANGEMENTS REPRESENTED THEREBY ARE AND SHALL REMAIN THE PROPERTY OF RRM DESIGN GROUP AND NO PART THEREOF SHALL BE COPIED, DISCLOSED TO OTHERS OR USED IN CONNECTION WITH ANY WORK OR PROJECT OTHER THAN THE SPECIFIED PROJECT FOR WHICH THEY HAVE BEEN PREPARED AND DEVELOPED WITHOUT THE WRITTEN CONSENT OF RRM DESIGN GROUP. VISUAL CONTACT WITH THESE DRAWINGS OR SPECIFICATIONS SHALL CONSTITUTE CONCLUSIVE EVIDENCE OF ACCEPTANCE OF THESE RESTRICTIONS. SUBMITTAL OF THESE DOCUMENTS FOR PUBLIC AGENCY REVIEW SHALL NOT BE CONSIDERED A WAIVER OF RRM DESIGN GROUP'S RIGHTS.

RRM DESIGN GROUP COPYRIGHT 2024.
RRM IS A CALIFORNIA CORPORATION

REGISTERED LANDSCAPE ARCHITECT
Exp. 10/31/26
STATE OF CALIFORNIA

CONSULTANT

Wormhoudt INC

AGENCY

FOURTH ST COMMUNITY CENTER AND PARK

HENDERSON AVE., PORTERVILLE, CA 93257

PUMPTRACK LAYOUT PLAN

NO.	REVISION	DATE
1	PLAN CHECK REVISION 1	05/17/24

PROJECT MANAGER

DRAWN BY: BR / KM
CHECKED BY: ZW

DATE: 2024.05.17

PROJECT NUMBER: 2883-01-RC22

SHEET: PT-3.0

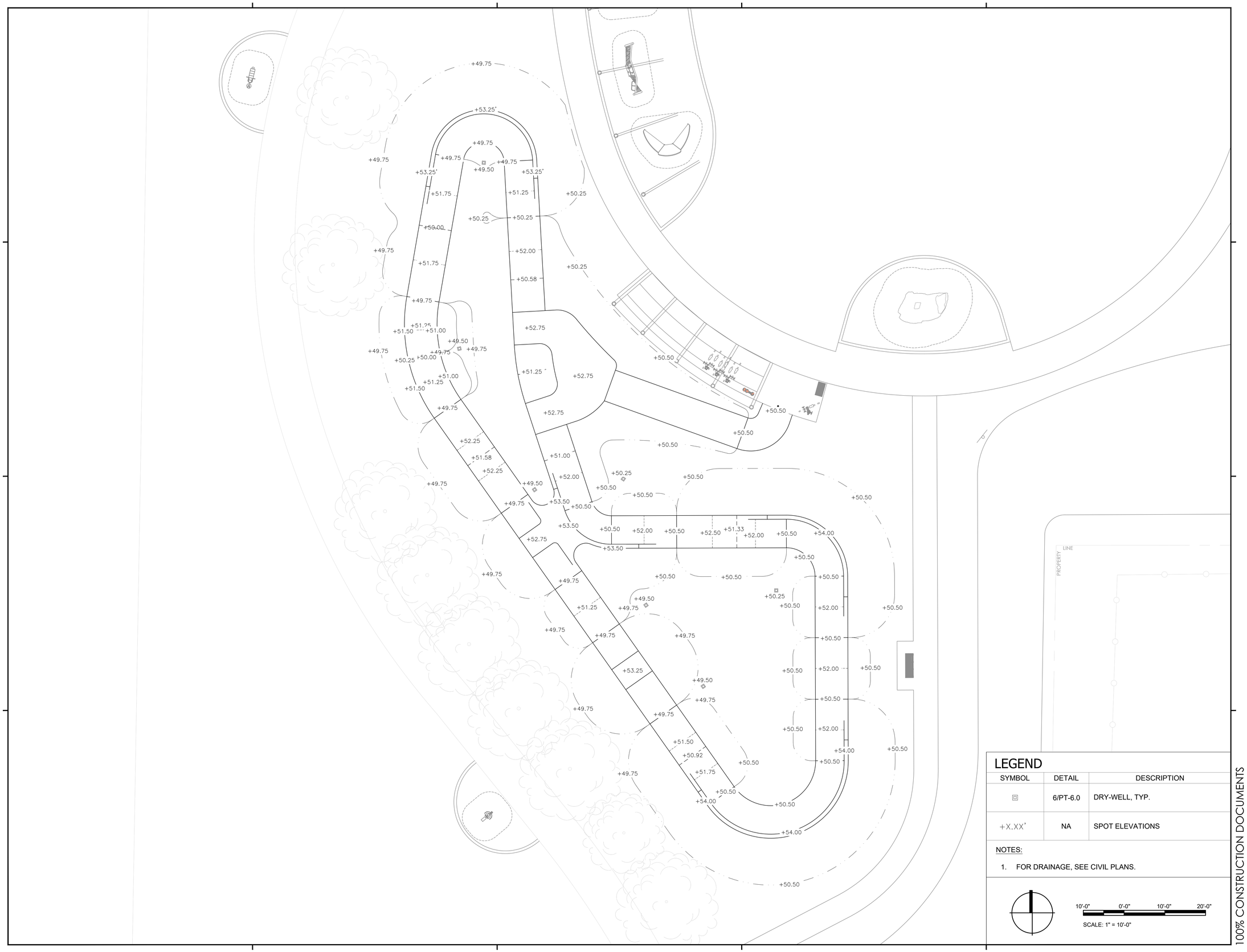

LEGEND

SYMBOL	DETAIL	DESCRIPTION
⊡	6/PT-6.0	DRY-WELL, TYP.
+X.XX'	NA	SPOT ELEVATIONS

NOTES:

1. FOR DRAINAGE, SEE CIVIL PLANS.

10'-0" 0'-0" 10'-0" 20'-0"

SCALE: 1" = 10'-0"

100% CONSTRUCTION DOCUMENTS

rrm design group

rrmdesign.com | (805) 543-1794

3765 SOUTH HIGUERA STREET, SUITE 102

SAN LUIS OBISPO, CA 93401

THE INCLUDED DRAWINGS, SPECIFICATIONS, IDEAS, DESIGNS AND ARRANGEMENTS REPRESENTED THEREBY ARE AND SHALL REMAIN THE PROPERTY OF RRM DESIGN GROUP AND NO PART THEREOF SHALL BE COPIED, DISCLOSED TO OTHERS OR USED IN CONNECTION WITH ANY WORK OR PROJECT OTHER THAN THE SPECIFIED PROJECT FOR WHICH THEY HAVE BEEN PREPARED AND DEVELOPED WITHOUT THE WRITTEN CONSENT OF RRM DESIGN GROUP. VISUAL CONTACT WITH THESE DRAWINGS OR SPECIFICATIONS SHALL CONSTITUTE CONCLUSIVE EVIDENCE OF ACCEPTANCE OF THESE RESTRICTIONS. SUBMITTAL OF THESE DOCUMENTS FOR PUBLIC AGENCY REVIEW SHALL NOT BE CONSIDERED A WAIVER OF RRM DESIGN GROUP'S RIGHTS.

RRM DESIGN GROUP COPYRIGHT 2024.
RRM IS A CALIFORNIA CORPORATION

REGISTERED LANDSCAPE ARCHITECT
J. A. WORMHOUDT
No. 2805
Exp. 10/31/26
STATE OF CALIFORNIA

CONSULTANT

Wormhoudt INC

AGENCY

FOURTH ST COMMUNITY CENTER AND PARK

HENDERSON AVE., PORTERVILLE, CA 93257

PUMPTRACK GRADING & DRAINAGE PLAN

NO.	REVISION	DATE
1	PLAN CHECK REVISION 1	05/17/24

PROJECT MANAGER

DRAWN BY BR / KM

CHECKED BY ZW

DATE 2024.05.17

PROJECT NUMBER 2883-01-RC22

SHEET PT-4.0

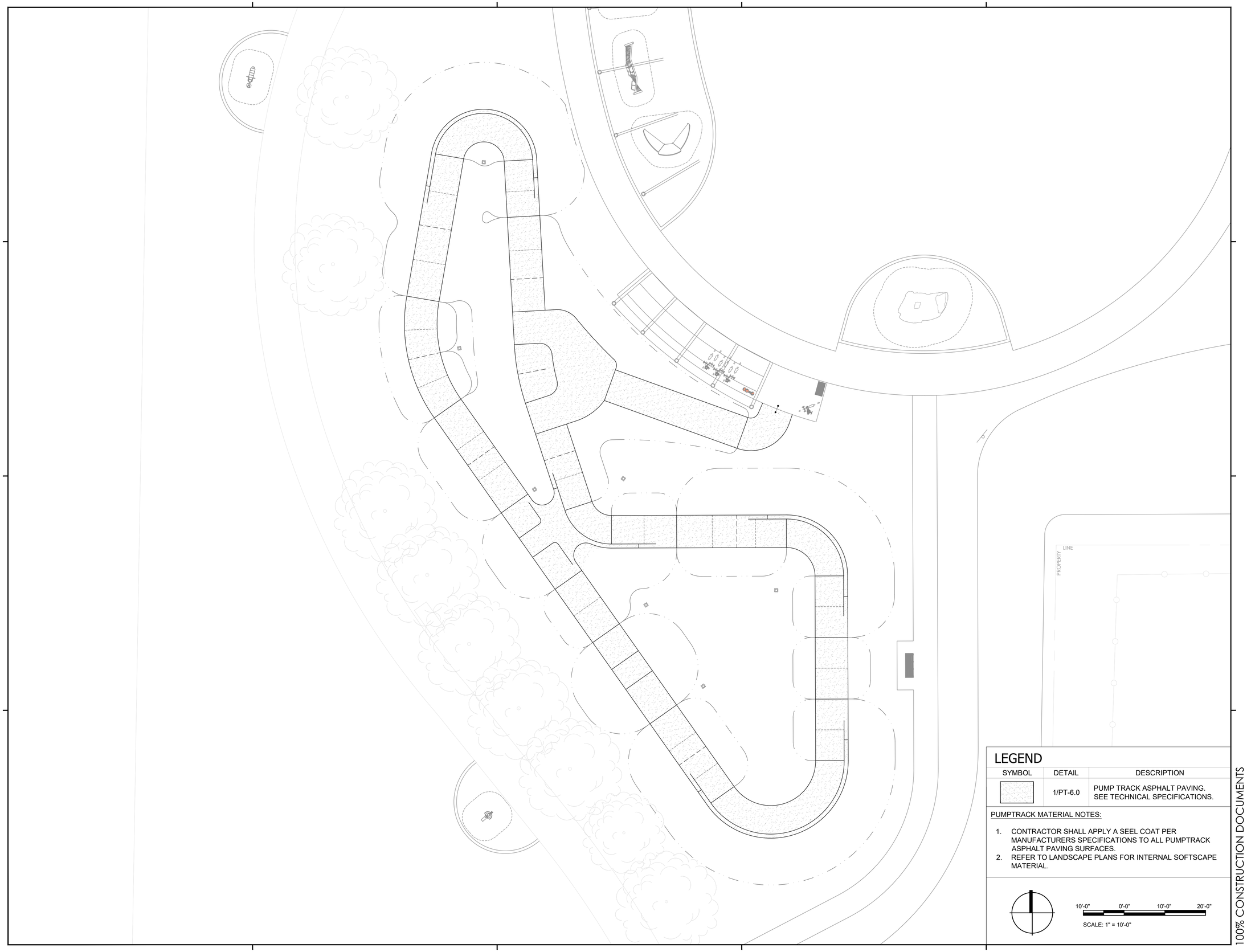

LEGEND

SYMBOL	DETAIL	DESCRIPTION
	1/PT-6.0	PUMP TRACK ASPHALT PAVING. SEE TECHNICAL SPECIFICATIONS.

PUMPTRACK MATERIAL NOTES:

1. CONTRACTOR SHALL APPLY A SEEL COAT PER MANUFACTURERS SPECIFICATIONS TO ALL PUMPTRACK ASPHALT PAVING SURFACES.
2. REFER TO LANDSCAPE PLANS FOR INTERNAL SOFTSCAPE MATERIAL.

10'-0" 0'-0" 10'-0" 20'-0"

SCALE: 1" = 10'-0"

100% CONSTRUCTION DOCUMENTS

rrm design group

rrmdesign.com | (805) 543-1794

3765 SOUTH HIGUERA STREET, SUITE 102

SAN LUIS OBISPO, CA 93401

THE INCLUDED DRAWINGS, SPECIFICATIONS, IDEAS, DESIGNS AND ARRANGEMENTS REPRESENTED THEREBY ARE AND SHALL REMAIN THE PROPERTY OF RRM DESIGN GROUP AND NO PART THEREOF SHALL BE COPIED, DISCLOSED TO OTHERS OR USED IN CONNECTION WITH ANY WORK OR PROJECT OTHER THAN THE SPECIFIED PROJECT FOR WHICH THEY HAVE BEEN PREPARED AND DEVELOPED WITHOUT THE WRITTEN CONSENT OF RRM DESIGN GROUP. VISUAL CONTACT WITH THESE DRAWINGS OR SPECIFICATIONS SHALL CONSTITUTE CONCLUSIVE EVIDENCE OF ACCEPTANCE OF THESE RESTRICTIONS. SUBMITTAL OF THESE DOCUMENTS FOR PUBLIC AGENCY REVIEW SHALL NOT BE CONSIDERED A WAIVER OF RRM DESIGN GROUP'S RIGHTS.

RRM DESIGN GROUP COPYRIGHT 2024.
RRM IS A CALIFORNIA CORPORATION

REGISTERED LANDSCAPE ARCHITECT
Exp. 10/31/26
STATE OF CALIFORNIA

CONSULTANT

Wormhoudt INC

AGENCY

FOURTH ST COMMUNITY CENTER AND PARK

HENDERSON AVE., PORTERVILLE, CA 93257

PUMPTRACK MATERIALS PLAN

NO.	REVISION	DATE
1	PLAN CHECK REVISION 1	05/17/24

PROJECT MANAGER

DRAWN BY BR / KM

CHECKED BY ZW

DATE 2024.05.17

PROJECT NUMBER 2883-01-RC22

SHEET PT-5.0

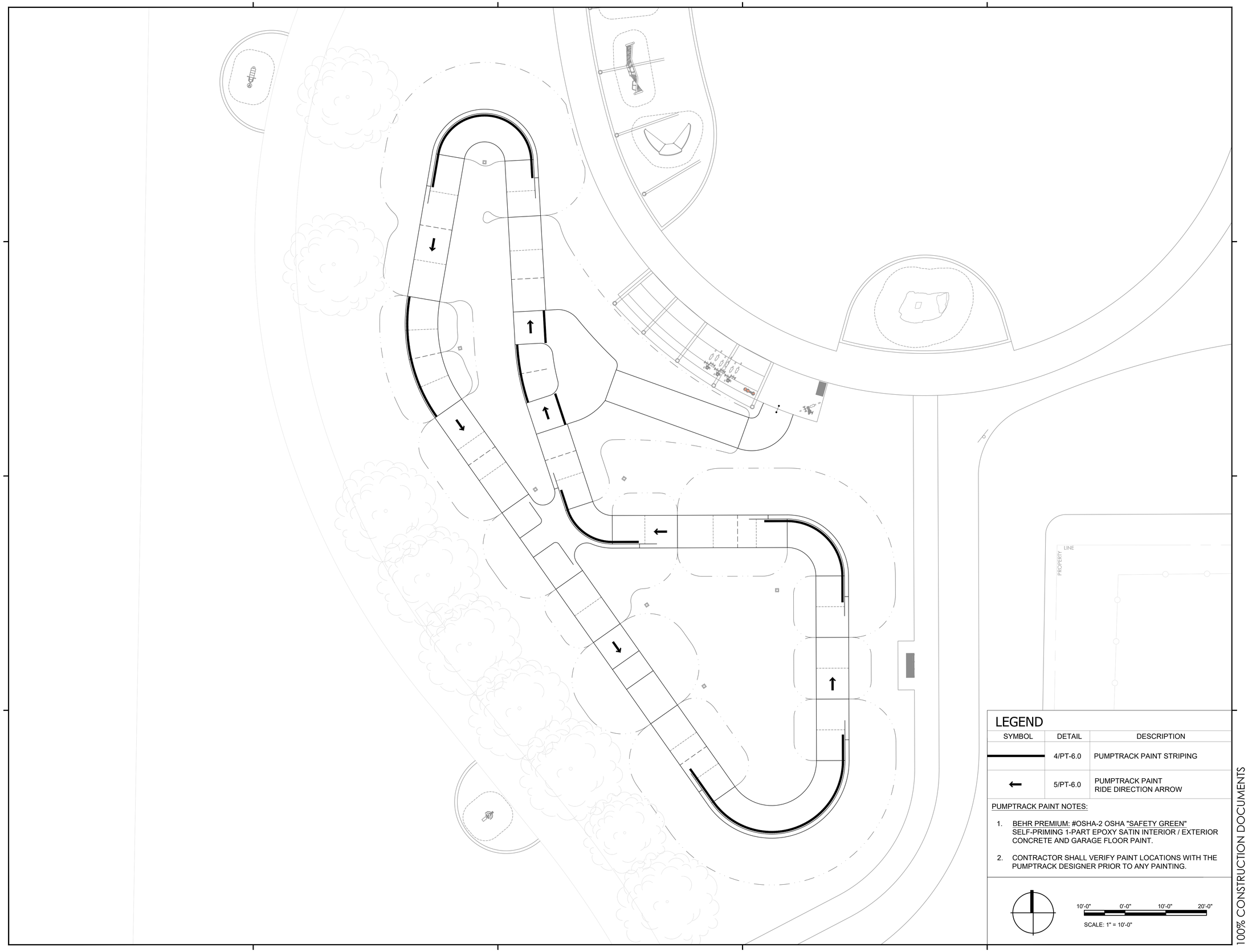

LEGEND

SYMBOL	DETAIL	DESCRIPTION
	4/PT-6.0	PUMPTRACK PAINT STRIPING
←	5/PT-6.0	PUMPTRACK PAINT RIDE DIRECTION ARROW

PUMPTRACK PAINT NOTES:

1. BEHR PREMIUM: #OSHA-2 OSHA "SAFETY GREEN" SELF-PRIMING 1-PART EPOXY SATIN INTERIOR / EXTERIOR CONCRETE AND GARAGE FLOOR PAINT.
2. CONTRACTOR SHALL VERIFY PAINT LOCATIONS WITH THE PUMPTRACK DESIGNER PRIOR TO ANY PAINTING.

10'-0" 0'-0" 10'-0" 20'-0"

SCALE: 1" = 10'-0"

100% CONSTRUCTION DOCUMENTS

rrm design group

rrmdesign.com | (805) 543-1794
3765 SOUTH HIGUERA STREET, SUITE 102
SAN LUIS OBISPO, CA 93401

THE INCLUDED DRAWINGS, SPECIFICATIONS, IDEAS, DESIGNS AND ARRANGEMENTS REPRESENTED THEREBY ARE AND SHALL REMAIN THE PROPERTY OF RRM DESIGN GROUP AND NO PART THEREOF SHALL BE COPIED, DISCLOSED TO OTHERS OR USED IN CONNECTION WITH ANY WORK OR PROJECT OTHER THAN THE SPECIFIED PROJECT FOR WHICH THEY HAVE BEEN PREPARED AND DEVELOPED WITHOUT THE WRITTEN CONSENT OF RRM DESIGN GROUP. VISUAL CONTACT WITH THESE DRAWINGS OR SPECIFICATIONS SHALL CONSTITUTE CONCLUSIVE EVIDENCE OF ACCEPTANCE OF THESE RESTRICTIONS. SUBMITTAL OF THESE DOCUMENTS FOR PUBLIC AGENCY REVIEW SHALL NOT BE CONSIDERED A WAIVER OF RRM DESIGN GROUP'S RIGHTS.

RRM DESIGN GROUP COPYRIGHT 2024.
RRM IS A CALIFORNIA CORPORATION

REGISTERED LANDSCAPE ARCHITECT
Z. A. WORMHOUDT
No. 2805
Exp. 10/31/26
STATE OF CALIFORNIA

CONSULTANT

Wormhoudt INC

AGENCY

FOURTH ST COMMUNITY CENTER AND PARK

HENDERSON AVE., PORTERVILLE, CA 93257

PUMPTRACK PAINTING PLAN

NO.	REVISION	DATE
1	PLAN CHECK REVISION 1	05/17/24

PROJECT MANAGER

DRAWN BY: BR / KM
CHECKED BY: ZW

DATE: 2024.05.17

PROJECT NUMBER: 2883-01-RC22

SHEET: PT-5.1

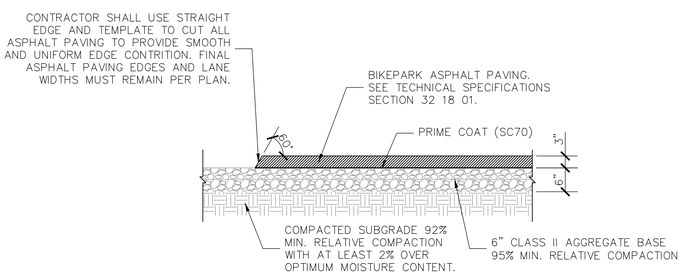

NOTE:
1. CONTRACTOR SHALL APPLY A SLURRY COAT PER MANUFACTURES SPECIFICATIONS TO ALL PUMPTRACK ASPHALT PAVING SURFACES.

ASPHALT PAVING 1/2"=1'-0" (1)

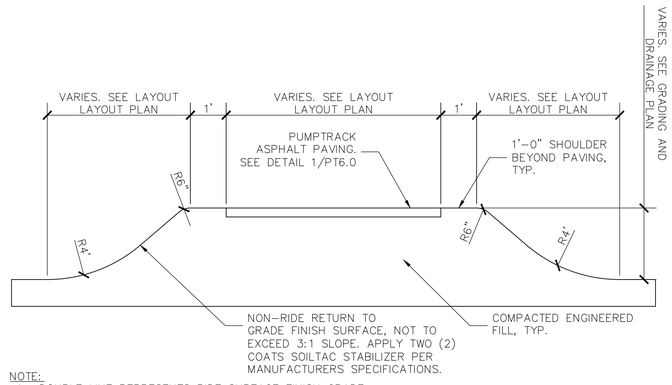

NOTE:
1. DOUBLE LINE REPRESENTS RIDE SURFACE FINISH GRADE.
2. ALL PUMPTRACK FEATURE SURFACES SHALL BE FINISHED WITH ASPHALT PER MANUFACTURER SPECIFICATIONS.

TYPICAL RIDE LANE SECTION 1/2"=1'-0" (2)

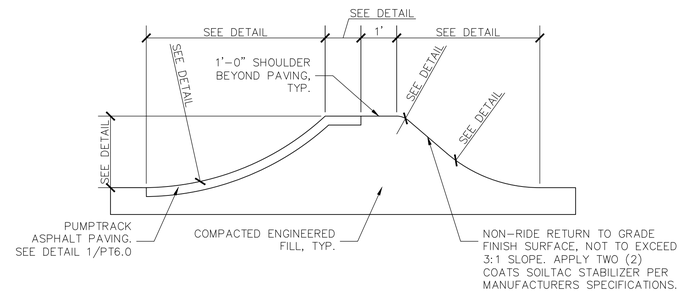

NOTE:
1. DOUBLE LINE REPRESENTS RIDE SURFACE FINISH GRADE.
2. ALL PUMPTRACK FEATURE SURFACES SHALL BE FINISHED WITH ASPHALT PER MANUFACTURER SPECIFICATIONS.

TYPICAL RIDE FEATURE SECTION 1/2"=1'-0" (3)

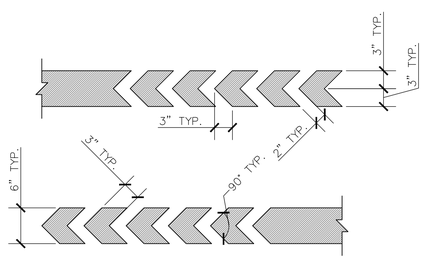

NOTE:
1. CAD FILE FOR PAINT PATTERN AVAILABLE UPON REQUEST.
2. GRAPHIC ABOVE SHALL APPLY TO BEGINNING AND END OF EACH PAINT LOCATION WITH ARROWS POINTING THE RIDE DIRECTION OF THE TRACK.

PUMPTRACK PAINT STRIPING 1"=1'-0" (4)

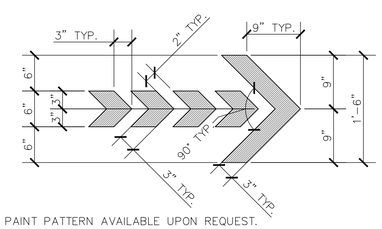

NOTE:
1. CAD FILE FOR PAINT PATTERN AVAILABLE UPON REQUEST.

PUMPTRACK PAINT RIDE DIRECTION ARROW 1"=1'-0" (5)

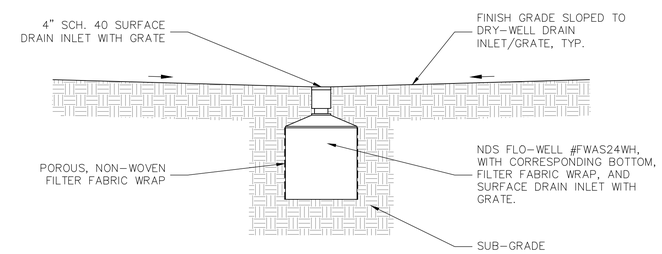

NDS FLO-WELL ENGINEERED DRY-WELL 1/2"=1'-0" (6)

rrm design group
rrmdesign.com | (805) 543-1794
3765 SOUTH HIGUERA STREET, SUITE 102
SAN LUIS OBISPO, CA 93401

THE INCLUDED DRAWINGS, SPECIFICATIONS, IDEAS, DESIGNS AND ARRANGEMENTS REPRESENTED THEREBY ARE AND SHALL REMAIN THE PROPERTY OF RRM DESIGN GROUP AND NO PART THEREOF SHALL BE COPIED, DISCLOSED TO OTHERS OR USED IN CONNECTION WITH ANY WORK OR PROJECT OTHER THAN THE SPECIFIC PROJECT FOR WHICH THEY HAVE BEEN PREPARED AND DEVELOPED WITHOUT THE WRITTEN CONSENT OF RRM DESIGN GROUP. VISUAL CONTACT WITH THESE DRAWINGS OR SPECIFICATIONS SHALL CONSTITUTE PROOF OF ACCEPTANCE OF THE ABOVE RESTRICTIONS. SUBMITTALS OF THESE DOCUMENTS FOR PUBLIC AGENCY REVIEW SHALL NOT BE CONSIDERED A WAIVER OF RRM DESIGN GROUP'S RIGHTS.
RRM DESIGN GROUP COPYRIGHT 2024.
RRM IS A CALIFORNIA CORPORATION

REGISTERED LANDSCAPE ARCHITECT
ZACHARY WORTHINGTON
No. 6405
Exp. 10/31/26
STATE OF CALIFORNIA

CONSULTANT
Wormhoudt INC

AGENCY

FOURTH ST COMMUNITY CENTER AND PARK
HENDERSON AVE., PORTERVILLE, CA 93257

PUMPTRACK STANDARD DETAILS

NO.	REVISION	DATE
1	PLAN CHECK REVISION 1	05/17/24

PROJECT MANAGER

DRAWN BY: BR / KM
CHECKED BY: ZW

DATE: 2024.05.17

PROJECT NUMBER: 2883-01-RC22

SHEET: PT-6.0

100% CONSTRUCTION DOCUMENTS

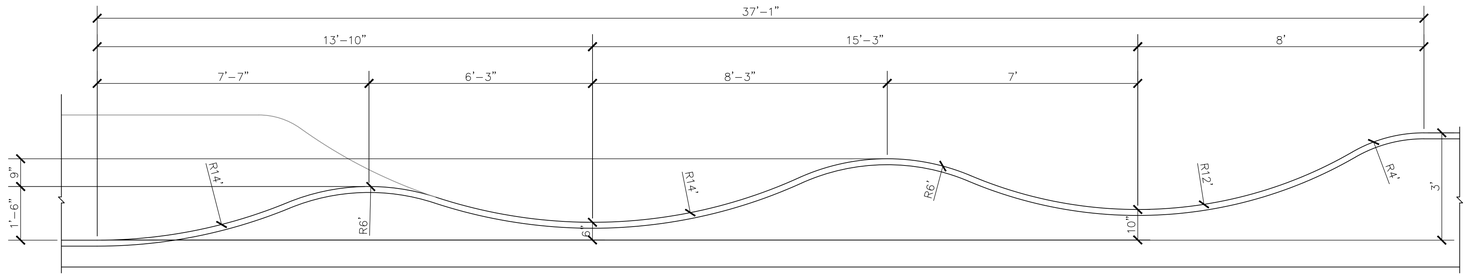

NOTE:
1. SEE DETAIL 2/PT-6.0 FOR TYPICAL RIDE LANE SECTION.
2. SEE DETAIL 3/PT-6.0 FOR TYPICAL RIDE FEATURE SECTION.

37'-1" PUMPTRACK RHYTHM LANE 1/2"=1'-0" 1

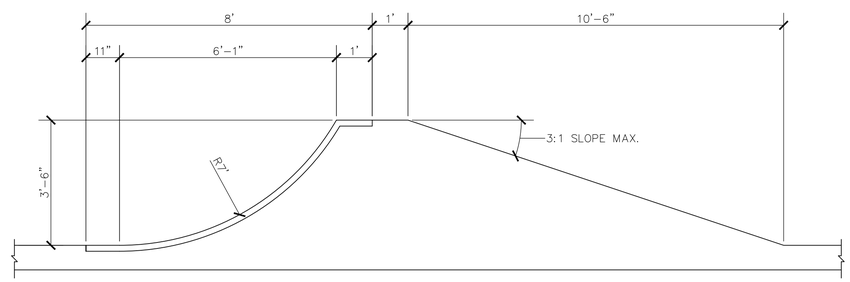

NOTE:
1. SEE DETAIL 2/PT-6.0 FOR TYPICAL RIDE LANE SECTION.
2. SEE DETAIL 3/PT-6.0 FOR TYPICAL RIDE FEATURE SECTION.

3'-6" PUMPTRACK BERM 1/2"=1'-0" 2

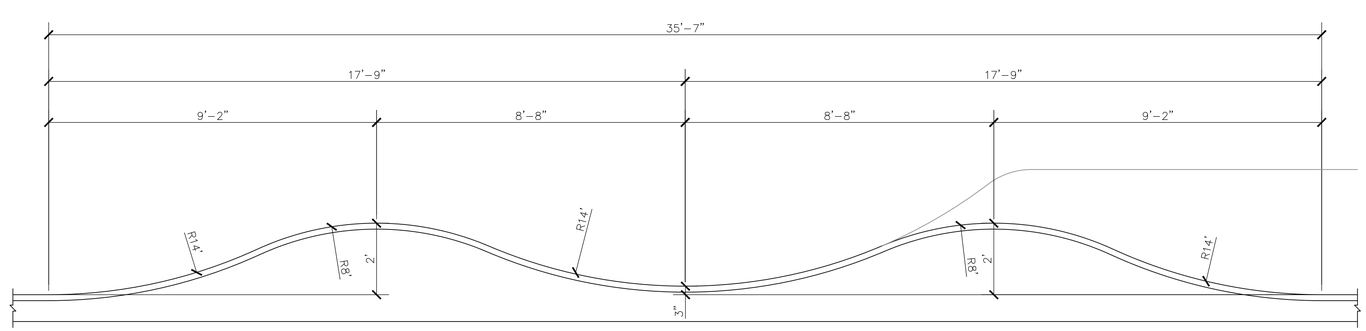

NOTE:
1. SEE DETAIL 2/PT-6.0 FOR TYPICAL RIDE LANE SECTION.
2. SEE DETAIL 3/PT-6.0 FOR TYPICAL RIDE FEATURE SECTION.

35'-7" PUMPTRACK RHYTHM LANE 1/2"=1'-0" 3

rrm design group
rrmdesign.com | (805) 543-1794
3765 SOUTH HIGUERA STREET, SUITE 102
SAN LUIS OBISPO, CA 93401
THE INCLUDED DRAWINGS, SPECIFICATIONS, IDEAS, DESIGNS AND ARRANGEMENTS REPRESENTED THEREBY ARE AND SHALL REMAIN THE PROPERTY OF RRM DESIGN GROUP AND NO PART THEREOF SHALL BE COPIED, DISCLOSED TO OTHERS OR USED IN CONNECTION WITH ANY WORK OR PROJECT OTHER THAN THE SPECIFIED PROJECT FOR WHICH THEY HAVE BEEN PREPARED AND DEVELOPED WITHOUT THE WRITTEN CONSENT OF RRM DESIGN GROUP. VISUAL CONTACT WITH THESE DRAWINGS OR SPECIFICATIONS SHALL CONSTITUTE CONCLUSIVE EVIDENCE OF ACCEPTANCE OF THESE RESTRICTIONS. SUBMITTAL OF THESE DOCUMENTS FOR PUBLIC AGENCY REVIEW SHALL NOT BE CONSIDERED A WAIVER OF RRM DESIGN GROUP'S RIGHTS.
RRM DESIGN GROUP COPYRIGHT 2024.
RRM IS A CALIFORNIA CORPORATION

REGISTERED LANDSCAPE ARCHITECT
Exp. 10/31/26
STATE OF CALIFORNIA

CONSULTANT
Wormhoudt INC

AGENCY

FOURTH ST COMMUNITY CENTER AND PARK
HENDERSON AVE., PORTERVILLE, CA 93257

PUMPTRACK DETAILS

NO.	REVISION	DATE
1	PLAN CHECK REVISION 1	05/17/24

PROJECT MANAGER
DRAWN BY BR / KM
CHECKED BY ZW
DATE 2024.05.17
PROJECT NUMBER 2883-01-RC22
SHEET PT-7.0

100% CONSTRUCTION DOCUMENTS

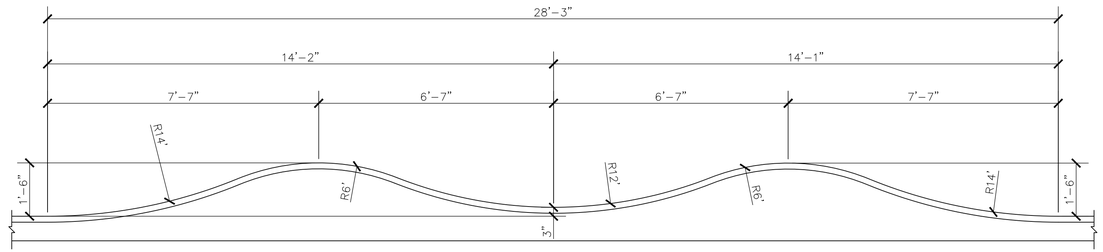

NOTE:
1. SEE DETAIL 2/PT-6.0 FOR TYPICAL RIDE LANE SECTION.
2. SEE DETAIL 3/PT-6.0 FOR TYPICAL RIDE FEATURE SECTION.

28'-3" PUMPTRACK CORNER LANE 1/2"=1'-0" 4

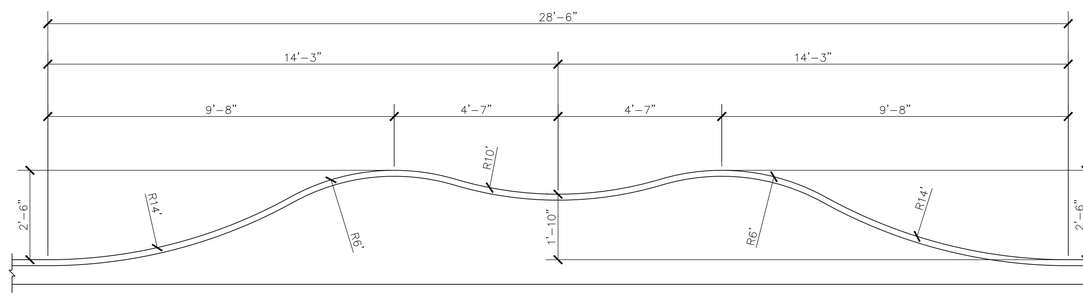

NOTE:
1. SEE DETAIL 2/PT-6.0 FOR TYPICAL RIDE LANE SECTION.
2. SEE DETAIL 3/PT-6.0 FOR TYPICAL RIDE FEATURE SECTION.

28'-6" PUMPTRACK RHYTHM LANE 1/2"=1'-0" 5

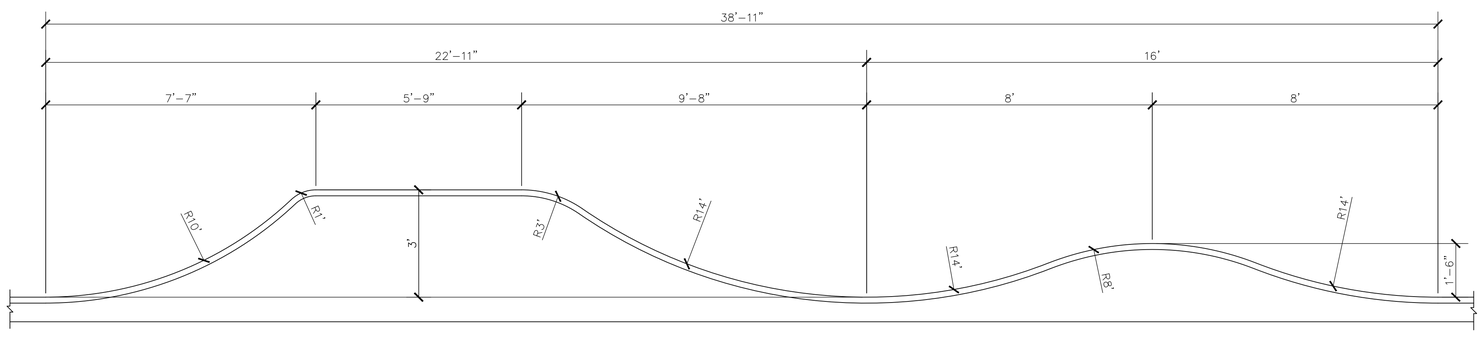

NOTE:
1. SEE DETAIL 2/PT-6.0 FOR TYPICAL RIDE LANE SECTION.
2. SEE DETAIL 3/PT-6.0 FOR TYPICAL RIDE FEATURE SECTION.

38'-11" PUMPTRACK TABLETOP LANE 1/2"=1'-0" 6

rrm design group
rrmdesign.com | (805) 543-1794
3765 SOUTH HIGUERA STREET, SUITE 102
SAN LUIS OBISPO, CA 93401

THE INCLUDED DRAWINGS, SPECIFICATIONS, IDEAS, DESIGNS AND ARRANGEMENTS REPRESENTED THEREBY ARE AND SHALL REMAIN THE PROPERTY OF RRM DESIGN GROUP AND NO PART THEREOF SHALL BE COPIED, DISCLOSED TO OTHERS OR USED IN CONNECTION WITH ANY WORK OR PROJECT OTHER THAN THE SPECIFIED PROJECT FOR WHICH THEY HAVE BEEN PREPARED AND DEVELOPED WITHOUT THE WRITTEN CONSENT OF RRM DESIGN GROUP. VISUAL CONTACT WITH THESE DRAWINGS OR SPECIFICATIONS SHALL CONSTITUTE CONCLUSIVE EVIDENCE OF ACCEPTANCE OF THESE RESTRICTIONS. SUBMITTAL OF THESE DOCUMENTS FOR PUBLIC AGENCY REVIEW SHALL NOT BE CONSIDERED A WAIVER OF RRM DESIGN GROUP'S RIGHTS.
RRM DESIGN GROUP COPYRIGHT 2024.
RRM IS A CALIFORNIA CORPORATION

CONSULTANT
Wormhoudt INC

AGENCY

FOURTH ST COMMUNITY CENTER AND PARK
HENDERSON AVE., PORTERVILLE, CA 93257

PUMPTRACK DETAILS

NO.	REVISION	DATE
1	PLAN CHECK REVISION 1	05/17/24

PROJECT MANAGER
DRAWN BY BR / KM
CHECKED BY ZW
DATE 2024.05.17
PROJECT NUMBER 2883-01-RC22
SHEET PT-7.1

100% CONSTRUCTION DOCUMENTS

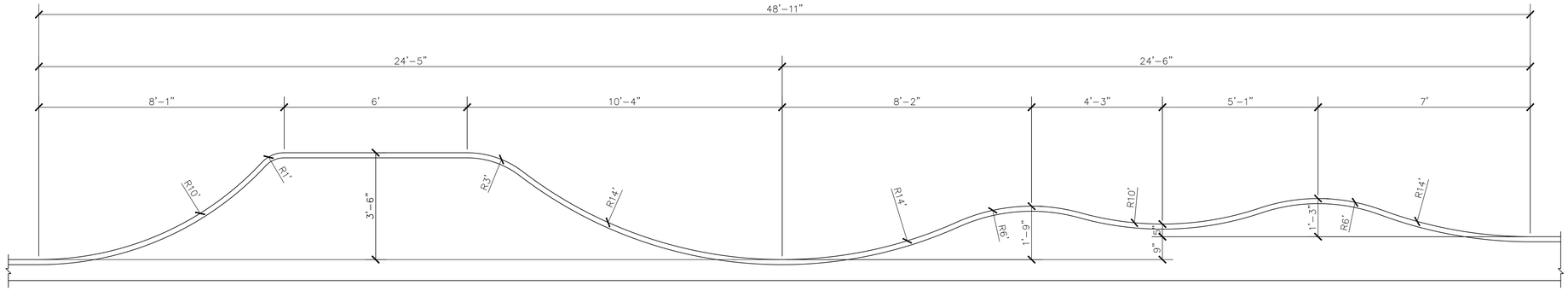

NOTE:
1. SEE DETAIL 2/PT-6.0 FOR TYPICAL RIDE LANE SECTION.
2. SEE DETAIL 3/PT-6.0 FOR TYPICAL RIDE FEATURE SECTION.

48'-11" PUMPTRACK TABLETOP LANE

1/2"=1'-0" 7

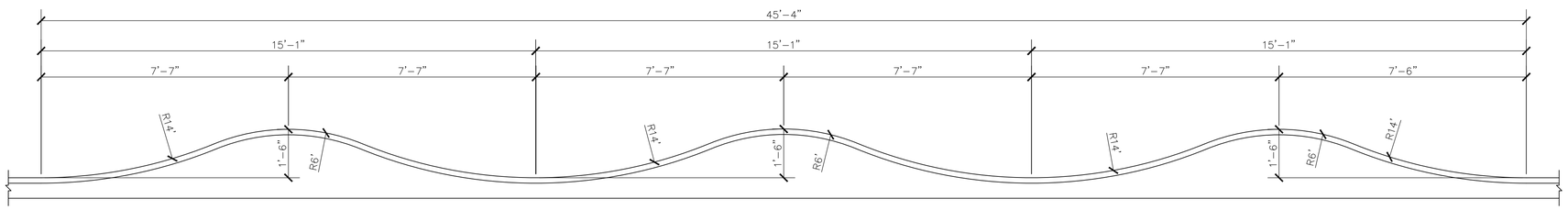

NOTE:
1. SEE DETAIL 2/PT-6.0 FOR TYPICAL RIDE LANE SECTION.
2. SEE DETAIL 3/PT-6.0 FOR TYPICAL RIDE FEATURE SECTION.

45-4" PUMPTRACK RHYTHM LANE

1/2"=1'-0" 8

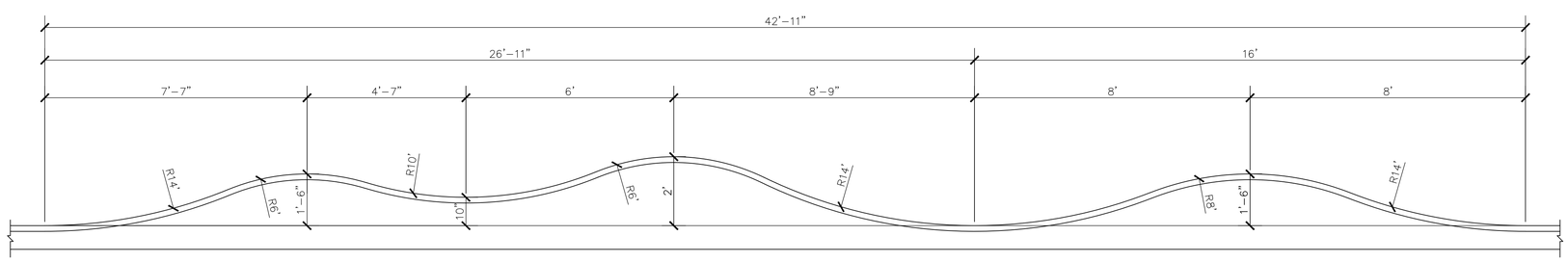

NOTE:
1. SEE DETAIL 2/PT-6.0 FOR TYPICAL RIDE LANE SECTION.
2. SEE DETAIL 3/PT-6.0 FOR TYPICAL RIDE FEATURE SECTION.

42'-11" PUMPTRACK RHYTHM LANE

1/2"=1'-0" 9

rrm design group
rrmdesign.com | (805) 543-1794
3765 SOUTH HIGUERA STREET, SUITE 102
SAN LUIS OBISPO, CA 93401

THE INCLUDED DRAWINGS, SPECIFICATIONS, IDEAS, DESIGNS AND ARRANGEMENTS REPRESENTED THEREBY ARE AND SHALL REMAIN THE PROPERTY OF RRM DESIGN GROUP AND NO PART THEREOF SHALL BE COPIED, DISCLOSED TO OTHERS OR USED IN CONNECTION WITH ANY WORK OR PROJECT OTHER THAN THE SPECIFIED PROJECT FOR WHICH THEY HAVE BEEN PREPARED AND DEVELOPED WITHOUT THE WRITTEN CONSENT OF RRM DESIGN GROUP. VISUAL CONTACT WITH THESE DRAWINGS AND SPECIFICATIONS SHALL CONSTITUTE PROOF OF ACCEPTANCE OF THE ABOVE RESTRICTIONS. SUBMITTAL OF THESE DOCUMENTS FOR PUBLIC AGENCY REVIEW SHALL NOT BE CONSIDERED A WAIVER OF RRM DESIGN GROUP'S RIGHTS.
RRM DESIGN GROUP COPYRIGHT 2024.
RRM IS A CALIFORNIA CORPORATION

LICENSED LANDSCAPE ARCHITECT
ZACHARY WORTHOUDT
No. 6405
Exp. 10/31/26
STATE OF CALIFORNIA

CONSULTANT
Wormhoudt INC

AGENCY

100% CONSTRUCTION DOCUMENTS

FOURTH ST COMMUNITY CENTER AND PARK
HENDERSON AVE., PORTERVILLE, CA 93257

PUMPTRACK DETAILS

NO.	REVISION	DATE
1	PLAN CHECK REVISION 1	05/17/24

PROJECT MANAGER

DRAWN BY: BR / KM
CHECKED BY: ZW
DATE: 2024.05.17
PROJECT NUMBER: 2883-01-RC22
SHEET: PT-7.2

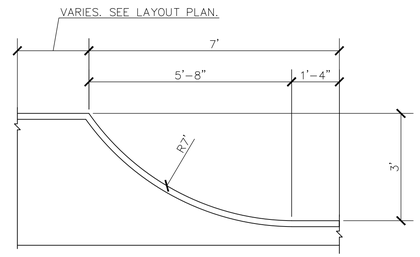

NOTE:
1. SEE DETAIL 2/PT-6.0 FOR TYPICAL RIDE LANE SECTION.
2. SEE DETAIL 3/PT-6.0 FOR TYPICAL RIDE FEATURE SECTION.

3'-0" PUMPTRACK CORNER BERM LANE 1/2"=1'-0" 10

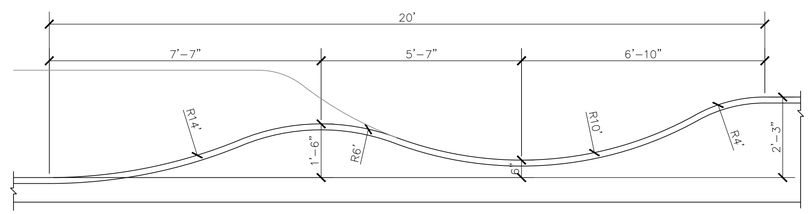

NOTE:
1. SEE DETAIL 2/PT-6.0 FOR TYPICAL RIDE LANE SECTION.
2. SEE DETAIL 3/PT-6.0 FOR TYPICAL RIDE FEATURE SECTION.

20'-0" PUMPTRACK RHYTHM LANE 1/2"=1'-0" 11

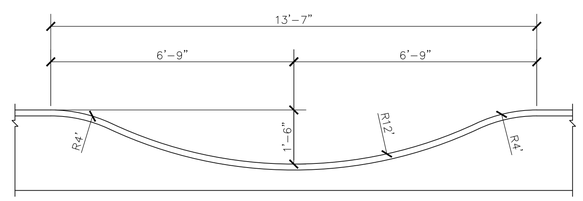

NOTE:
1. SEE DETAIL 2/PT-6.0 FOR TYPICAL RIDE LANE SECTION.
2. SEE DETAIL 3/PT-6.0 FOR TYPICAL RIDE FEATURE SECTION.

13'-7" PUMPTRACK DECK DIVOT 1/2"=1'-0" 12

rrm design group
rrmdesign.com | (805) 543-1794
3765 SOUTH HIGUERA STREET, SUITE 102
SAN LUIS OBISPO, CA 93401
THE INCLUDED DRAWINGS, SPECIFICATIONS, IDEAS, DESIGNS AND ARRANGEMENTS REPRESENTED THEREBY ARE AND SHALL REMAIN THE PROPERTY OF RRM DESIGN GROUP AND NO PART THEREOF SHALL BE COPIED, DISCLOSED TO OTHERS OR USED IN CONNECTION WITH ANY WORK OR PROJECT OTHER THAN THE SPECIFIED PROJECT FOR WHICH THEY HAVE BEEN PREPARED AND DEVELOPED WITHOUT THE WRITTEN CONSENT OF RRM DESIGN GROUP. VISUAL CONTACT WITH THESE DRAWINGS OR SPECIFICATIONS SHALL CONSTITUTE CONCLUSIVE EVIDENCE OF ACCEPTANCE OF THESE RESTRICTIONS. SUBMITTAL OF THESE DOCUMENTS FOR PUBLIC AGENCY REVIEW SHALL NOT BE CONSIDERED A WAIVER OF RRM DESIGN GROUP'S RIGHTS.
RRM DESIGN GROUP COPYRIGHT 2024.
RRM IS A CALIFORNIA CORPORATION

CONSULTANT
Wormhoudt INC

AGENCY

FOURTH ST COMMUNITY CENTER AND PARK
HENDERSON AVE., PORTERVILLE, CA 93257

PUMPTRACK DETAILS

NO.	REVISION	DATE
1	PLAN CHECK REVISION 1	05/17/24

PROJECT MANAGER

DRAWN BY BR / KM
CHECKED BY ZW

DATE 2024.05.17

PROJECT NUMBER 2883-01-RC22

SHEET PT-7.3

100% CONSTRUCTION DOCUMENTS

CITY OF PORTERVILLE

FOURTH ST COMMUNITY CENTER AND PARK

PORTERVILLE, CA

CONSTRUCTION DOCUMENTS

PROJECT GENERAL NOTES

USE OF PLANS: THESE PLANS ARE THE PROPERTY OF RRM AND MAY NOT BE USED WITHOUT THE EXPRESS, WRITTEN CONSENT.

THESE NOTES APPLY TO ALL PORTIONS, PHASES AND SUBCONTRACTORS OF THIS PROJECT.
APPLICABLE CODES AND STANDARDS:

- *2022 CALIFORNIA BUILDING CODE AND ITS APPENDICES AND STANDARDS.*
- *2022 CALIFORNIA PLUMBING CODE AND ITS APPENDICES AND STANDARDS.*
- *2022 CALIFORNIA MECHANICAL CODE AND ITS APPENDICES AND STANDARDS.*
- *2022 CALIFORNIA FIRE CODE AND ITS APPENDICES AND STANDARDS.*
- *2022 CALIFORNIA ELECTRICAL CODE AND ITS APPENDICES AND STANDARDS.*
- *2022 CALIFORNIA BUILDING ENERGY EFFICIENCY STANDARDS.*
- *2022 CALIFORNIA GREEN BUILDING STANDARDS CODE AND ITS APPENDICIES AND STANDARDS.*
- *CURRENT CITY OF PORTERVILLE MUNICIPAL CODE.*

1. ALL WORK DESCRIBED IN THE DRAWINGS SHALL BE VERIFIED FOR DIMENSION, GRADE, EXTENT AND COMPATIBILITY WITH EXISTING SITE CONDITIONS. ANY DISCREPANCIES AND UNEXPECTED CONDITIONS THAT AFFECT OR CHANGE THE WORK DESCRIBED IN THE CONTRACT DOCUMENTS SHALL BE BROUGHT TO THE ARCHITECT'S ATTENTION IMMEDIATELY. DO NOT PROCEED WITH THE WORK IN THE AREA OF DISCREPANCIES UNTIL ALL SUCH DISCREPANCIES ARE RESOLVED. IF THE CONTRACTOR CHOOSES TO DO SO, HE/SHE SHALL BE PRECEDING AT HIS/HER OWN RISK.
2. DIMENSIONS SHOWN SHALL TAKE PRECEDENCE OVER DRAWING SCALE OR PROPORTION. LARGER SCALE DRAWINGS SHALL TAKE PRECEDENCE OVER SMALLER SCALE DRAWINGS. ALL DIMENSIONS ARE ROUGH AND TO FACE OF FRAMING.
3. GRADING PLANS, DRAINAGE IMPROVEMENTS, ROAD AND ACCESS REQUIREMENTS AND ENVIRONMENTAL HEALTH CONSIDERATIONS SHALL COMPLY WITH ALL LOCAL ORDINANCES.
4. IN THE EVENT OF THE UNFORESEEN ENCOUNTER OF MATERIALS SUSPECTED TO BE OF AN ARCHAEOLOGICAL OR PALEONTOLOGICAL NATURE, ALL GRADING AND EXCAVATION SHALL CEASE IN THE IMMEDIATE AREA AND THE CONTRACTOR SHALL NOTIFY THE OWNER. THE FIND SHALL BE LEFT UNTOUCHED UNTIL AN EVALUATION BY A QUALIFIED ARCHAEOLOGIST OR PALEONTOLOGIST IS MADE.
5. CONTRACTOR IS TO BE RESPONSIBLE FOR BEING FAMILIAR WITH THESE DOCUMENTS INCLUDING ALL CONTRACT REQUIREMENTS.
6. CONTRACTOR TO REVIEW CALIFORNIA GREEN CODE REQUIREMENTS FOR CONTRACTOR REQUIREMENTS.
7. TEMPORARY FACILITIES: CONTRACTOR SHALL PAY FOR, PROVIDE AND MAINTAIN TEMPORARY FACILITIES FOR PROJECT PROTECTION AND CONSTRUCTION, AND AS REQUIRED BY LOCAL REGULATION AND THESE DOCUMENTS. SUCH FACILITIES INCLUDE, BUT ARE NOT LIMITED TO: TOILETS, LIGHTS, HEATERS, POWER, GAS, FANS, WATER, PHONES, FENCES, SIGNS, SHEDS, ETC. REMOVE FROM SITE UPON COMPLETION OF WORK. OBTAIN BUILDING OFFICIAL OR FIRE MARTIAL APPROVAL PRIOR TO USE OF ANY TEMPORARY HEATING DEVICE.
8. CONTRACTOR SHALL PROVIDE FOR PROTECTION AND SAFETY: RESPONSIBLE FOR ALL ITEMS (SIGNS, LIGHTS, FENCES, BRACING, ANCHORAGE, FIRE-EXTINGUISHERS, ETC.) NECESSARY FOR THE PROTECTION OF THE PUBLIC, WORKERS, MATERIALS, CONSTRUCTION AND PROPERTY PER LOCAL, STATE AND FEDERAL REQUIREMENTS (INCLUDING EARTHQUAKES, FIRES, SPILLS, ACCIDENTS, EROSION, MUD, DUST, ETC.).
9. CONTRACTOR TO PROVIDE COMPLETE DETAILS OF ENGINEERED TEMPORARY SHORING OR SLOT CUTTING PROCEDURES ON PLANS. CALL FOR INSPECTION BEFORE EXCAVATION BEGINS.
10. THE SOILS ENGINEER IS TO APPROVE THE KEY OR BOTTOM AND LEAVE A CERTIFICATE ON THE SITE FOR THE GRADING INSPECTOR. THE GRADING INSPECTOR IS TO BE NOTIFIED BEFORE ANY GRADING BEGINS, AND FOR BOTTOM INSPECTION, BEFORE FILL IS PLACED. FILL MAY NOT BE PLACED WITHOUT APPROVAL OF THE GRADING INSPECTOR.
11. A SEPERATE OFFICER, ACCESS EASEMENT/AGREEMENT, AND/OR RECIPRICAL ACCESS EASEMENT/AGREEMENT MAY BE REQUIRED TO ENSURE THAT THE PROPOSED PRIVATE ACCESS ROADWAY WILL REMAIN OPEN TO THROUGH TRAFFIC AND EMERGENCY VEHICLES PRIOR TO FINAL OF BUILDING PERMIT.
12. SHOP WELDS MUST BE PERFORMED BY A LICENSED FABRICATOR'S SHOP.
13. OSHA PERMITS REQUIRED FOR VERTICAL CUTS 5' OR OVER.
14. FIRE SPRINKLER SHOP DRAWINGS & CALCULATIONS SHALL BE SUBMITTED TO BUILDING DEPT. & APPROVED BY FIRE DEPT. PRIOR TO INSTALLATION.
15. PROVIDE FIRE ALARM SYSTEM. FIRE ALARM SYSTEM SHALL ACTIVATE UPON FIRE SPRINKLER SYSTEM OPERATION.
16. THE CONSTRUCTION WASTE MANAGEMENT PLAN SHALL BE COORDINATED WITH THE CITY OF PORTERVILLE REQUIREMENTS AND PROCEDURES PER CALGREEN 4.408.2

PROJECT DIRECTORY

APPLICANT
CITY OF PORTERVILLE
ADDRESS: 291 N MAIN ST.
PORTERVILLE, CA 93257
CONTACT: SARAH WEAVER
EMAIL: sweaver@ci.porterville.ca.us
P:(559) 791-7843

ARCHITECT
RRM DESIGN GROUP
ADDRESS: 3765 S HIGUERA ST #102
SAN LUIS OBISPO, CA 93401
CONTACT: MICHAEL SCOTT
EMAIL: mlscott@rrmdesign.com
P:(805) 543-1794

CIVIL ENGINEER
LANE ENGINEERS, INC.
ADDRESS: 979 N Blackstone St
Tulare, CA 93274
CONTACT: Wa Vang, PE, QSD
EMAIL:
P:(559) 799-5999

LANDSCAPE ARCHITECT
RRM DESIGN GROUP
ADDRESS: 3765 SOUTH HIGUERA STREET, SUITE 102
SAN LUIS OBISPO, CA 93401
CONTACT: LANCE WIERSCHEM
EMAIL: ldwierschem@rrmdesign.com
P:(805) 543-1794

STRUCTURAL ENGINEER
CORNERSTONE STRUCTURAL ENGINEERING GROUP
ADDRESS: 986 W ALLUVIAL AVE
FRESNO, CA 93711
CONTACT: DUSTIN LEE
EMAIL: dlee@cseg.com
P:(559) 320-3200

MECHANICAL ENGINEER
3C ENGINEERING
ADDRESS: 1500 Palm Street.
San Luis Obispo, CA 93401
CONTACT: BRIAN STARRETT, PE
EMAIL: bstarrett@3ceng.com
P:(805) 540-5358

ELECTRICAL ENGINEER
ROSE SING EASTHAM & ASSOCIATES
ADDRESS: 131 S. Dunworth St.
Visalia, CA 93292
CONTACT: STEVE EASTHAM, PE
EMAIL: seastham@rse-eng.com
P:(559) 799-5999

ENERGY CONSULTANT
3C ENGINEERING
ADDRESS: 1500 Palm Street.
San Luis Obispo, CA 93401
CONTACT: BRIAN STARRETT, PE
EMAIL: bstarrett@3ceng.com
P:(805) 540-5358

UTILITIES

WATER AND SEWER SERVICE	CITY OF PORTERVILLE
ELECTRICAL SERVICE	SOUTHERN CALIFORNIA EDISON
GAS SERVICE	SOUTHERN CALIFORNIA GAS
TELEPHONE SERVICE	AT&T
GARBAGE SERVICE	CITY OF PORTERVILLE

PROJECT INFORMATION

PROJECT SCOPE:

1. ABOVE AND BELOW GRADE EXCAVATION AND CONSTRUCTION OF A 18,546 SF COMMUNITY CENTER.
2. ALL SITE WORK WITHIN THE PROPERTY LINE.
3. ALL THE WORK SHOWN IN THE DRAWINGS AND SPECIFICATIONS.

DESCRIPTION:

A PROPOSED COMMUNITY CENTER AND PARK TO SERVE THE COMMUNITY LOCATED ADJACENT TO AN EXISTING PORTERVILLE BIKE PATH. THE PROJECT SITE CONSISTS OF 6.6 ACRES LOCATED ON FOURTH STREET. THE PROPOSED COMMUNITY CENTER IS APPROXIMATELY 18546 SF CONSISTING OF ONE STORY. THE COMMUNITY CENTER INCLUDES A GYM, A RACQUETBALL COURT THAT CAN SERVE AS A COMMUNITY MEETING ROOM, A TEEN ACTIVITY ROOM, A TEEN STUDY ROOM, AND STAFF OFFICE SPACE. RESTROOMS ARE PROVIDED WITHIN THE GYM FOR OCCUPANTS AND ANOTHER RESTROOM IS ACCESSIBLE FROM THE EXTERIOR FOR PARK OCCUPANTS.

SITE INFORMATION:

STREET ADDRESS:	N 4TH STREET
APN:	253-050-089 & 253-050-093
ZONING:	PK
LOT SIZE:	4.81 AC
LAND USE:	COMMUNITY CENTER & PARK
EXISTING USE:	VACANT
PROPOSED USE:	PARKS AND PUBLIC RECREATION

BUILDING INFORMATION:

NUMBER OF STORIES:	1
OCCUPANCY GROUP:	A-3 & B
CONSTRUCTION TYPE:	VB
SPRINKLERED:	YES
MAX. HEIGHT ALLOWED: (PER 2022 CBC TABLE 504 3)	60
MAX. HEIGHT ALLOWED: (PER CITY OF...)	60
MAX. HEIGHT PROPOSED:	42'-10"
ROOF RATING:	
HIGH FIRE ZONE:	No
TOTAL OCCUPANCY LOAD:	715

FLOOR AREA RATIO

MAXIMUM FAR:	0.10
PROPOSED FAR:	0.09

LOT COVERAGE

BUILDING:	16,514 SF
HARDSACPE/PAVING:	74,840 SF
LANDSCAPE:	173,095 SF

SETBACKS

	REQUIRED	*PROPOSED*
FRONT:	20'	50'+
REAR:	10'	50'+
SIDES:	10'	50'+

BUILDING NET AREA

BUILDING AREA SCHEDULE	
AREA	**AREA NAME**
15549 SF	GROUND FLOOR

SUPPORTING DOCUMENTS

STRUCTURAL CALCULATIONS

PREPARED BY:	CORNERSTONE
DATE PREPARED:	1/19/2024
JOB NUMBER:	2023032

GEOTECH REPORT

PREPARED BY:	SOILS ENGINEERING, INC.
DATE PREPARED:	1/13/2023
JOB NUMBER:	22-18633

ENERGY COMPLIANCE

PREPARED BY:	3C ENGINEERING, INC.
DATE PREPARED:	1/12/2024
JOB NUMBER:	22205

PARKING COUNT

4 ACCESSIBLE PARKING SPACES
5 EV PARKING SPACES
82 REGULAR PARKING SPACES

93 PARKING SPACES TOTAL

SEE TABLE 5.106.5.3.1

PLUMBING REQUIREMENTS

BUILDING PLUMBING OCUPANT LOAD (CPC SECTION 422.0 TABLE A)

PLUMBING OCCUPANCY	AREA	NET / GROSS	FACTOR	LOAD	OCCUPANTS MEN	OCCUPANTS WOMEN
GYM		NET	30	302		
RACQUETBALL		GROSS	30	35		
MGR OFFICE		GROSS	200	1		
OPEN OFFICE		GROSS	200	3		
OFFICE		GROSS	200	1		
LOBBY		NET	200	7		
TEEN STUDY		NET	50	25		
TEEN ACTIVITY		NET	50	40		
				409	205	205

BUILDING PLUMBING FIXTURE COUNT (PER CPC TABLE 422.1)

FIXTURE	REQUIRED	PROVIDED
Female		
Water Closet	6	6
Lavatory	4	4
Male		
Water Closet	3	3
Urinal	3	3
Lavatory	2	4
Other		
Drinking Fountain	1	1
Service Sink	1	1

SHEET INDEX

GA001	TITLE SHEET
GA101	GENERAL NOTES
GA102	GENERAL NOTES
GA203	CAL GREEN REQUIREMENTS
GA204	CAL GREEN REQUIREMENTS
GA205	CAL GREEN REQUIREMENTS
GA401	CODE ANALYSIS
T-240	ENERGY COMPLIANCE DOCUMENTATION
T-241	ENERGY COMPLIANCE DOCUMENTATION
T-242	ENERGY COMPLIANCE DOCUMENTATION
AS101	ARCHITECTURAL SITE PLAN
AS102	ENLARGED SITE PLANS
AS201	SITE DIMENSION AND HORIZONTAL CONTROL PLAN
AS202	SITE DIMENSION AND HORIZONTAL CONTROL PLAN
AS203	SITE DIMENSION AND HORIZONTAL CONTROL PLAN
AS301	GRADING AND DRAINAGE PLAN
AS302	GRADING AND DRAINAGE PLAN
AS303	GRADING AND DRAINAGE PLAN
AS304	GRADING AND DRAINAGE PLAN
AS701	SITE DEVELOPMENT DETAILS
AS702	SITE DEVELOPMENT DETAILS
AS703	SITE DEVELOPMENT DETAILS
AS704	SITE DEVELOPMENT DETAILS
A101	GROUND FLOOR PLAN
A102	DIMENSIONED FLOOR PLAN
A111	REFLECTED CEILING PLAN
A121	ROOF PLAN
A201	EXTERIOR ELEVATIONS
A202	EXTERIOR ELEVATIONS
A301	BUILDING SECTIONS
A302	BUILDING SECTIONS
A303	BUILDING SECTIONS
A401	ENLARGED PLANS - RESTROOMS AND OFFICE
A402	ENLARGED PLANS - RACQUETBALL COURT
A403	ENLARGED PLANS - COURT STRIPING
A404	ENLARGED PLANS - COURTS
A405	ENLARGED PLANS - HVAC SCREEN AND TRELLIS
A406	ENLARGED PLANS - RCP
A411	WALL SECTIONS
A412	WALL SECTIONS
A413	WALL SECTIONS
A414	WALL SECTIONS
A501	FINISH PLANS
A511	INTERIOR ELEVATIONS
A512	INTERIOR ELEVATIONS
A513	INTERIOR ELEVATIONS
A601	DOOR AND WINDOW SCHEDULES
A602	STOREFRONT SCHEDULES
A603	STOREFRONT SCHEDULES
A901	ARCHITECTURAL DETAILS - DOOR AND WINDOW
A902	ARCHITECTURAL DETAILS - FLASHING
A903	ARCHITECTURAL DETAILS - EXTERIOR
A905	ARCHITECTURAL DETAILS - INTERIOR
A906	ARCHITECTURAL DETAILS - INTERIOR
A907	ARCHITECTURAL DETAILS - ROOF
A911	ARCHITECTURAL DETAILS - SITE
A921	ARCHITECTURAL DETAILS - WALL TYPES
A941	ACCESSIBILITY DETAILS - CLEARANCES
A942	ACCESSIBILITY DETAILS - SITE
A944	ACCESSIBILITY DETAILS - RESTROOMS
Grand total: 60	

VICINITY MAP

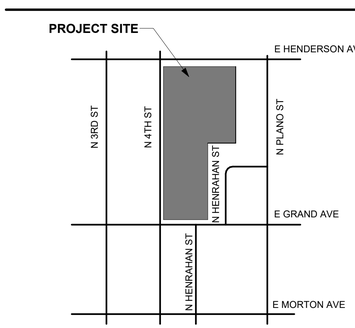

rrm design group
rrmdesign.com | (805) 543-1794
3765 SOUTH HIGUERA STREET SUITE 102
SAN LUIS OBISPO, CA 93401

THE INCLUDED DRAWINGS, SPECIFICATIONS, IDEAS, DESIGNS AND ARRANGEMENTS REPRESENTED THEREBY ARE AND SHALL REMAIN THE PROPERTY OF RRM DESIGN GROUP AND NO PART THEREOF SHALL BE COPIED, DISCLOSED TO OTHERS OR USED IN CONNECTION WITH ANY WORK OR PROJECT OTHER THAN THE SPECIFIED PROJECT FOR WHICH THEY HAVE BEEN PREPARED AND DEVELOPED WITHOUT THE WRITTEN CONSENT OF RRM DESIGN GROUP. VISUAL CONTACT WITH THESE DRAWINGS OR SPECIFICATIONS SHALL CONSTITUTE CONCLUSIVE EVIDENCE OF ACCEPTANCE OF THESE RESTRICTIONS. SUBMITTAL OF PRELIMINARY DRAWINGS FOR REVIEW SHALL NOT BE CONSIDERED A WAIVER OF RRM DESIGN GROUP'S RIGHTS.
RRM DESIGN GROUP COPYRIGHT 2022
RRM IS A CALIFORNIA CORPORATION

LICENSED ARCHITECT
MICHAEL SCOTT LUNDQUIST
C39878
10-31-25
RENEWAL DATE
STATE OF CALIFORNIA

CONSULTANT

AGENCY

FOURTH ST COMMUNITY CENTER AND PARK
HENDERSON AVE., PORTERVILLE, CA 93257

TITLE SHEET

NO.	REVISION	DATE
1	PLAN CHECK REVISION 1	05/17/24
2	PLAN CHECK REVISION 2	09/17/24

PROJECT MANAGER TSL
DRAWN BY MC, NA, PM
CHECKED BY DD, KF
DATE 2024.09.17
PROJECT NUMBER 2883-01-RC22
SHEET GA001

PLAN CHECK REVISION 2

9/20/2024 11:04:05 AM
Autodesk Docs://2883-01_Porterville Fourth St Community Center/2883-01-RC22_Porterville_v22.rvt

GENERAL NOTES

1. ALL HORIZONTAL CEILING DRYWALL APPLIED TO TRUSSES SHALL BE 5/8" GYPSUM BOARD.
2. ALL EXTERIOR WINDOWS PER OWNER SPECS. REFER TO PLANS FOR SIZE AND EXTERIOR ELEVATIONS FOR ALL GRIDS & COLORS.
3. WATER HEATER: (REFER TO BUILDING ANALYSIS REPORT)
   a. HOT WATER INLET AND OUTLET PIPES INSULATED: EXTERNALLY WRAPPED WITH R-4 OR GREATER (FIRST 5 FEET IN UNCONDITIONED SPACES).
   b. PROVIDE A TEMPERATURE AND PRESSURE RELIEF VALVE WITH A FULL SIZE DRAIN OF GALVANIZED STEEL OR HARD DRAWN COPPER TO THE OUTSIDE OF THE BUILDING WITH THE END OF THE PIPE PROTRUDING 6" MINIMUM @ 2' MAX. ABOVE GRADE POINTING DOWNWARD TO THE TERMINATION - UNTHREADED.
   c. COMBUSTION AIR PER MANUFACTURE REQUIREMENTS.
   d. CLEARANCES PER MANUFACTURE REQUIREMENTS.
   e. THE BURNERS AND BURNER IGNITION DEVICES SHALL BE LOCATED 18" ABOVE THE GARAGE FLOOR UNLESS LISTED AS FLAMMABLE VAPOR IGNITION RESISTANT *(NFPA54:9.1.10.2)* ***(2022 CPC SEC. 507.13)***
   f. WATER HEATERS SHALL BE ANCHORED OR STRAPPED TO RESIST HORIZONTAL DISPLACEMENT DUE TO EARTHQUAKE MOTION; STRAPPING SHALL BE WITHIN UPPER 1/3 & LOWER 1/3 OF TANK. LOWER STRAP 4" ABOVE CONTROLS. ***(2022 CPC SEC. 507.2)***
   g. WHEN INSTALLED IN A GARAGE THE WATER HEATER SHALL BE GUARDED AGAINST DAMAGE. ***(2022 CPC SEC. 507.13.1)***
4. PROVIDE WATER RESISTIVE BARRIER. WHEN PLASTER IS INSTALLED OVER WOOD BASED SHEATHING, BARRIER SHALL COMPLY WITH ***2022 CBC SECTIONS 2510.6.1*** OR ***2510.6.2.***
5. CLOTHES DRYER MOISTURE EXHAUST DUCTS SHALL TERMINATE OUTSIDE THE BUILDING AND HAVE A BACK-DRAFT DAMPER. EXHAUST DUCT IS LIMITED TO 14'-0" W/ TWO ELBOWS. THIS SHALL BE REDUCED 2'-0" FOR EVERY ELBOW IN EXCESS OF TWO. MIN. DIA. 4", SMOOTH, METAL DUCT ***(2022 CMC SEC. 504.4)***
6. ALL MANUFACTURED EQUIPMENT SHALL BE INSTALLED AS PER MANUFACTURER'S SPECIFICATION AND DIMENSIONS VERIFIED WITH INSTALLATION REQUIREMENTS.
7. SHOWERS AND TUB-SHOWER COMBINATIONS: CONTROL VALVES MUST BE PRESSURE BALANCED OR THERMOSTATIC MIXING VALVES ***(2022 CPC SEC. 408.3)***
8. PROVIDE TEMPERED GLAZING IN DOORS AND ENCLOSURES FOR SHOWERS, BATHTUBS, SAUNAS, STEAM ROOMS, HOT TUBS & SIMILAR USES WHERE THE BOTTOM EXPOSED EDGE IS LESS THAN 60-INCHES ABOVE A STANDING SURFACE. ***(2022 CBC 2406.4.5)***
9. HEATING AND AIR-CONDITIONING SYSTEM DESIGN SHALL CONFORM TO ***CALGREEN SEC. 4.507.2.***
10. PROVIDE 5/8" TYPE "X" GYPSUM BOARD AT GARAGE SIDE OF WALLS AND CEILINGS COMMON TO DWELLING AND COVER ALL BEAMS & POSTS, AS WELL AS SOFFITS & FURRED SPACES. ALSO AT UNDERSIDE OF ACCESSIBLE UNDER STAIR AREAS. ONE HOUR CONSTRUCTION FOR ALL WALLS & SOFFITS.

SITE ACCESSIBILITY

ACCESSIBLE PATH OF TRAVEL

1. THE ACCESSIBLE ROUTES OF TRAVEL AS INDICATED ON PLAN IS A BARRIER FREE ACCESS ROUTE WITHOUT ANY ABRUPT LEVEL CHANGES, SURFACE IS STABLE AND SLIP RESISTANT. THIS PATH SHALL BE MAINTAINED FREE OF OVERHANGING OBSTRUCTIONS TO 80" MIN AND PROTRUDING OBJECTS GREATER THAN A 4" PROJECTION FROM WALL AND ABOVE 27" AND LESS THAN 80", PER ***2022 CBC 11B-402***
2. ACCESSIBLE ROUTES SHALL BE PROVIDED WHERE REQUIRED BY ***2022 CBC SECTION 11B-206.2***. EXISTING BUILDINGS AND FACILITIES SALLY COMPLY WITH ***2022 CBC 11B-202***.
3. SITE ARRIVAL POINTS. AT LEAST ONE ACCESSIBLE ROUTE SHALL BE PROVIDED WITHIN THE SITE FROM ACCESSIBLE PARKING SPACES AND ACCESSIBLE PASSENGER DROP-OFF AND LOADING ZONES; PUBLIC STREETS AND SIDEWALKS; AND PUBLIC TRANSPORTATION STOPS TO THE ACCESSIBLE BUILDING OR FACILITY ENTRANCE THEY SERVE. WHERE MORE THAN ONE ROUTE IS PROVIDED, ALL ROUTES MUST BE ACCESSIBLE (***2022 CBC 11B-206.2.1)***
4. WITHIN A SITE. AT LEAST ONE ACCESSIBLE ROUTE SHALL CONNECT ACCESSIBLE BUILDINGS, ACCESSIBLE FACILITIES, ACCESSIBLE ELEMENTS, AND ACCESSIBLE SPACES THAT ARE ON THE SAME SITE EXCEPT AS NOTED PER ***2022 CBC 11B-206.2.2***
5. FLOOR AND GROUND SURFACES: FLOOR AND GROUND SURFACES SHALL BE STABLE, FIRM, AND SLIP RESISTANT PER ***2022 CBC 11B-302.1.*** OPENINGS IN FLOOR OR GROUND SURFACES SHALL NOT ALLOW PASSAGE OF A SPHERE MORE THAN 1/2 INCH DIAMETER. ELONGATED OPENINGS SHALL BE PLACED SO THAT THE LONG DIMENSION IS PERPENDICULAR TO THE DOMINANT DIRECTION OF TRAVEL, PER ***CBC 2022 11B-302.3***
6. CHANGES IN LEVELS: VERTICAL CHANGES IN LEVEL FOR FLOOR OR GROUND SURFACES MAY BE ¼ INCH HIGH MAXIMUM AND WITHOUT EDGE TREATMENT. CHANGES IN LEVEL GREATER THAN ¼ INCH AND NOT EXCEEDING ½ INCH IN HEIGHT SHALL BE BEVELED WITH A SLOPE NOT STEEPER THAN 1:2. ***2022 CBC 11B-303, 11B-303.2 & 11B-303.3***
7. PROTRUDING OBJECTS: PROTRUDING OBJECTS ON CIRCULATION PATHS SHALL COMPLY WITH CBC 11B-307. OBJECTS WITH LEADING EDGES MORE THAN 27" AND NOT MORE THAN 80" AFF OR GROUND SHALL PROTRUDE 4" MAXIMUM INTO THE CIRCULATION PATH. HANDRAILS SHALL BE PERMITTED TO PROTRUDE 4 1/2" MAXIMUM. ***2022 CBC 11B-307.2***
8. FREE STANDING OBJECTS MOUNTED ON POSTS SHALL OVERHANG CIRCULATION PATHS 12" MAX WHEN LOCATED 27" MIN AND 80" MAX AFF. WHERE A SIGN OR OBSTRUCTION IS MOUNTED BTWN POSTS AND THE CLEAR DISTANCE BTWN POSTS IS GREATER THAN 12", THE LOWEST EDGE OF SUCH SIGN OR OBSTRUCTION SHALL BE 27" MAX OR 80" MIN AFF. ***2022 CBC 11B-307.3***

PARKING SIGNAGE

1. ALL SIGNAGE SHALL NOT ENCROACH IN THE ACCESSIBLE PATH OF TRAVEL. PARKING SPACE IDENTIFICATION SIGNS SHALL INCLUDE THE INTERNATIONAL SYMBOL OF ACCESSIBILITY COMPLYING WITH SECTION ***CBC 2022 11B-703.7.2.1.*** SEE ALSO ***CBC 2022 11B-502.6***
2. PARKING IDENTIFICATION SIGNS AT ACCESSIBLE STALLS AND VAN ACCESSIBLE STALLS SHALL BE VISIBLE FROM EACH PARKING SPACE. SIGNS SHALL BE PERMANENTLY POSTED EITHER IMMEDIATELY ADJACENT TO THE PARKING SPACE OR WITHIN THE PROJECTED PARKING SPACE WIDTH AT THE HEAD END OF THE PARKING SPACE. SIGNS MAY ALSO BE PERMANENTLY POSTED ON A WALL AT THE INTERIOR END OF THE PARKING SPACE. ***2022 CBC 11B-502.6.3***
3. AN ADDITIONAL SIGN SHALL BE POSTED IMMEDIATELY ADJACENT TO ON-SITE ACCESSIBLE PARKING AND VISIBLE FROM EACH PARKING SPACE. ***2022 CBC 11B-502.8***
   1. THE ADDITIONAL SIGN SHALL NOT BE LESS THAN 17 INCHES WIDE BY 22 INCHES HIGH. ***2022 CBC 11B-502.8.1***
   2. ***2022 CBC 11B-502.8.2:*** THE ADDITIONAL SIGN SHALL CLEARLY STATE IN LETTERS WITH A MINIMUM HEIGHT OF 1 INCH THE FOLLOWING: "UNAUTHORIZED VEHICLES PARKED IN DESIGNATED ACCESSIBLE SPACES NOT DISPLAYING DISTINGUISHING PLACARDS OR SPECIAL LICENSE PLATES ISSUED FOR PERSONS WITH DISABILITIES WILL BE TOWED AWAY AT THE OWNER'S EXPENSE. TOWED VEHICLES MAY BE RECLAIMED AT: ____________ OR BY TELEPHONING ____________." BLANK SPACES SHALL BE FILLED IN WITH APPROPRIATE INFORMATION AS A PERMANENT PART OF THE SIGN. (TOWING COMPANY'S NAME AND TELEPHONE NUMBERS MUST BE PROVIDED ON SIGN).

PARKING GROUND SURFACE IDENTIFICATION:

1. EACH ACCESSIBLE CAR AND VAN SPACE SHALL HAVE SURFACE IDENTIFICATION COMPLYING WITH EITHER OF THE FOLLOWING SCHEMES: ***CBC 2022 11B-502.6.4***
   a. THE PARKING SPACE SHALL BE MARKED WITH AN INTERNATIONAL SYMBOL OF ACCESSIBILITY COMPLYING WITH SECTION ***CBC 2022 11B-703.7.2.1*** IN WHITE ON A BLUE BACKGROUND A MINIMUM 36 INCHES WIDE BY 36 INCHES HIGH. THE CENTERLINE OF THE INTERNATIONAL SYMBOL OF ACCESSIBILITY SHALL BE A MAXIMUM OF 6 INCHES FROM THE CENTERLINE OF THE PARKING SPACE, ITS SIDES PARALLEL TO THE LENGTH OF THE PARKING SPACE AND ITS LOWER CORNER AT, OR LOWER SIDE ALIGNED WITH, THE END OF THE PARKING SPACE LENGTH. ***CBC 2022 11B-502.6.4.1***
   b. THE PARKING SPACE SHALL BE OUTLINED OR PAINTED BLUE AND SHALL BE MARKED WITH AN INTERNATIONAL SYMBOL OF ACCESSIBILITY COMPLYING WITH SECTION ***CBC 2022 11B-703.7.2.1*** A MINIMUM 36 INCHES WIDE BY 36 INCHES HIGH IN WHITE OR A SUITABLE CONTRASTING COLOR. THE CENTERLINE OF THE INTERNATIONAL SYMBOL OF ACCESSIBILITY SHALL BE A MAXIMUM OF 6 INCHES FROM THE CENTERLINE THE PARKING SPACE, ITS SIDES PARALLEL TO THE LENGTH OF THE PARKING SPACE AND ITS LOWER CORNER AT, OR LOWER SIDE ALIGNED WITH, THE END OF THE PARKING SPACE. ***CBC 2022 11B-502.6.4.2***

SOLAR READY REQUIREMENTS

PER: 2022 CeNC SEC. 110.10(B) THROUGH SEC. 110.10(D)

(B) SOLAR ZONE.

1. **MINIMUM SOLAR ZONE AREA**. THE SOLAR ZONE SHALL HAVE A MINIMUM TOTAL AREA AS DESCRIBED BELOW. THE SOLAR ZONE SHALL COMPLY WITH ACCESS, PATHWAY, SMOKE VENTILATION AND SPACING REQUIREMENTS AS SPECIFIED IN TITLE 24, PART 9 OR OTHER PARTS OF TITLE 24 OR IN ANY REQUIREMENTS ADOPTED BY A LOCAL JURISDICTION. THE SOLAR ZONE TOTAL AREA SHALL BE COMPRISED OF AREAS THAT HAVE NO DIMENSION LESS THAN FIVE FEET AND ARE NO LESS THAN 80 SQUARE FEET EACH FOR BUILDINGS WITH ROOF AREAS LESS THAN OR EQUAL TO 10,000 SQUARE FEET OR NO LESS THAN 160 SQUARE FEET EACH FOR BUILDINGS WITH ROOF AREAS GREATER THAN 10,000 SQUARE FEET.

   B. MULTIFAMILY BUILDINGS, HOTEL/MOTEL OCCUPANCIES, AND NONRESIDENTIAL BUILDINGS. THE SOLAR ZONE SHALL BE LOCATED ON THE ROOF OR OVERHANG OF THE BUILDING OR ON THE ROOF OR OVERHANG OF ANOTHER STRUCTURE LOCATED WITHIN 250 FEET OF THE BUILDING OR ON COVERED PARKING INSTALLED WITH THE BUILDING PROJECT, AND SHALL HAVE A TOTAL AREA NO LESS THAN 15 PERCENT OF THE TOTAL ROOF AREA OF THE BUILDING EXCLUDING ANY SKYLIGHT AREA. THE SOLAR ZONE REQUIREMENT IS APPLICABLE TO THE ENTIRE BUILDING, INCLUDING MIXED OCCUPANCY.

   EXCEPTION 1 TO SECTION 110.10(B)1B: HIGH-RISE MULTIFAMILY BUILDINGS, HOTEL/MOTEL OCCUPANCIES, AND NONRESIDENTIAL BUILDINGS WITH A PERMANENTLY INSTALLED SOLAR ELECTRIC SYSTEM HAVING A NAMEPLATE DC POWER RATING, MEASURED UNDER STANDARD TEST CONDITIONS, OF NO LESS THAN ONE WATT PER SQUARE FOOT OF ROOF AREA.

   EXCEPTION 2 TO SECTION 110.10(B)1B: HIGH-RISE MULTIFAMILY BUILDINGS, HOTEL/MOTEL OCCUPANCIES WITH A PERMANENTLY INSTALLED DOMESTIC SOLAR WATER-HEATING SYSTEM COMPLYING WITH SECTION 150.1(C)8BIII.

   EXCEPTION 3 TO SECTION 110.10(B)1B: BUILDINGS WITH A DESIGNATED SOLAR ZONE AREA THAT IS NO LESS THAN 50 PERCENT OF THE POTENTIAL SOLAR ZONE AREA. THE POTENTIAL SOLAR ZONE AREA IS THE TOTAL AREA OF ANY LOW-SLOPED ROOFS WHERE THE ANNUAL SOLAR ACCESS IS 70 PERCENT OR GREATER AND ANY STEEP-SLOPED ROOFS ORIENTED BETWEEN 90 DEGREES AND 300 DEGREES OF TRUE NORTH WHERE THE ANNUAL SOLAR ACCESS IS 70 PERCENT OR GREATER. SOLAR ACCESS IS THE RATIO OF SOLAR INSOLATION INCLUDING SHADE TO THE SOLAR INSOLATION WITHOUT SHADE. SHADING FROM OBSTRUCTIONS LOCATED ON THE ROOF OR ANY OTHER PART OF THE BUILDING SHALL NOT BE INCLUDED IN THE DETERMINATION OF ANNUAL SOLAR ACCESS.

   EXCEPTION 4 TO SECTION 110.10(B)1B: LOW-RISE AND HIGH-RISE MULTIFAMILY BUILDINGS WITH ALL THERMOSTATS IN EACH DWELLING UNIT ARE DEMAND RESPONSE CONTROLS THAT COMPLY WITH SECTION 110.12(A), AND ARE CAPABLE OF RECEIVING AND RESPONDING TO DEMAND RESPONSE SIGNALS PRIOR TO GRANTING OF AN OCCUPANCY PERMIT BY THE ENFORCING AGENCY. IN ADDITION, EITHER A OR B BELOW:

   A. IN EACH DWELLING UNIT, COMPLY WITH ONE OF THE FOLLOWING MEASURES:

   I. INSTALL A DISHWASHER THAT MEETS OR EXCEEDS THE ENERGY STAR PROGRAM REQUIREMENTS WITH EITHER A REFRIGERATOR THAT MEETS OR EXCEEDS THE ENERGY STAR PROGRAM REQUIREMENTS OR A WHOLE HOUSE FAN DRIVEN BY AN ELECTRONICALLY COMMUTATED MOTOR; OR

   II. INSTALL A HOME AUTOMATION SYSTEM THAT COMPLIES WITH SECTION 110.12(A) AND IS CAPABLE OF, AT A MINIMUM, CONTROLLING THE APPLIANCES AND LIGHTING OF THE DWELLING AND RESPONDING TO DEMAND RESPONSE SIGNALS; OR

   III. INSTALL ALTERNATIVE PLUMBING PIPING TO PERMIT THE DISCHARGE FROM THE CLOTHES WASHER AND ALL SHOWERS AND BATHTUBS TO BE USED FOR AN IRRIGATION SYSTEM IN COMPLIANCE WITH THE CALIFORNIA PLUMBING CODE AND ANY APPLICABLE LOCAL ORDINANCES; OR

   IV. INSTALL A RAINWATER CATCHMENT SYSTEM DESIGNED TO COMPLY WITH THE CALIFORNIA PLUMBING CODE AND ANY APPLICABLE LOCAL ORDINANCES, AND THAT USES RAINWATER FLOWING FROM AT LEAST 65 PERCENT OF THE AVAILABLE ROOF AREA.

   B. MEET THE TITLE 24, PART 11, SECTION A4.106.8.2 REQUIREMENTS FOR ELECTRIC VEHICLE CHARGING SPACES.

   EXCEPTION 5 TO SECTION 110.10(B)1B: BUILDINGS WHERE THE ROOF IS DESIGNED AND APPROVED TO BE USED FOR VEHICULAR TRAFFIC OR PARKING OR FOR A HELIPORT.

2. **AZIMUTH RANGE**. ALL SECTIONS OF THE SOLAR ZONE LOCATED ON STEEP-SLOPED ROOFS SHALL HAVE AN AZIMUTH RANGE BETWEEN 90 DEGREES AND 300 DEGREES OF TRUE NORTH.

3. **SHADING.**

   A. NO OBSTRUCTIONS, INCLUDING BUT NOT LIMITED TO, VENTS, CHIMNEYS, ARCHITECTURAL FEATURES AND ROOF MOUNTED EQUIPMENT, SHALL BE LOCATED IN THE SOLAR ZONE.

   B. ANY OBSTRUCTION, LOCATED ON THE ROOF OR ANY OTHER PART OF THE BUILDING THAT PROJECTS ABOVE A SOLAR ZONE SHALL BE LOCATED AT LEAST TWICE THE DISTANCE, MEASURED IN THE HORIZONTAL PLANE, OF THE HEIGHT DIFFERENCE BETWEEN THE HIGHEST POINT OF THE OBSTRUCTION AND THE HORIZONTAL PROJECTION OF THE NEAREST POINT OF THE SOLAR ZONE, MEASURED IN THE VERTICAL PLANE.

   EXCEPTION TO SECTION 110.10(B)3: ANY ROOF OBSTRUCTION, LOCATED ON THE ROOF OR ANY OTHER PART OF THE BUILDING, THAT IS ORIENTED NORTH OF ALL POINTS ON THE SOLAR ZONE.

4. **STRUCTURAL DESIGN LOADS ON CONSTRUCTION DOCUMENTS**. FOR AREAS OF THE ROOF DESIGNATED AS SOLAR ZONE, THE STRUCTURAL DESIGN LOADS FOR ROOF DEAD LOAD AND ROOF LIVE LOAD SHALL BE CLEARLY INDICATED ON THE CONSTRUCTION DOCUMENTS.

   NOTE: SECTION 110.10(B)4 DOES NOT REQUIRE THE INCLUSION OF ANY COLLATERAL LOADS FOR FUTURE SOLAR ENERGY SYSTEMS.

(C) INTERCONNECTION PATHWAYS.

1. THE CONSTRUCTION DOCUMENTS SHALL INDICATE A LOCATION RESERVED FOR INVERTERS AND METERING EQUIPMENT AND A PATHWAY RESERVED FOR ROUTING OF CONDUIT FROM THE SOLAR ZONE TO THE POINT OF INTERCONNECTION WITH THE ELECTRICAL SERVICE.

2. FOR SINGLE-FAMILY RESIDENCES AND CENTRAL WATER-HEATING SYSTEMS, THE CONSTRUCTION DOCUMENTS SHALL INDICATE A PATHWAY FOR ROUTING OF PLUMBING FROM THE SOLAR ZONE TO THE WATER-HEATING SYSTEM.

(D) DOCUMENTATION. A COPY OF THE CONSTRUCTION DOCUMENTS OR A COMPARABLE DOCUMENT INDICATING THE INFORMATION FROM SECTIONS 110.10(B) THROUGH 110.10(C) SHALL BE PROVIDED TO THE OCCUPANT.

ENERGY CODE MANDATORY FEATURES

1. ALL JOINTS, PENETRATIONS AND OTHER OPENINGS IN THE BUILDING ENVELOPE THAT ARE POTENTIAL SOURCES OF AIR LEAKAGE SHALL BE CAULKED, GASKETED, WETHER-STRIPPED OR OTHERWISE SEALED TO LIMIT INFILTRATION AND EXFILTRATION ***(2022 CEnC SEC. 110.7)***
2. ATTTIC ACCESS DOORS SHALL HAVE PERMANENTLY ATTACHED INSULATION USING ADHESIVE OR MECHANICAL FASTENERS. THE ATTIC ACCESS SHALL BE GASKETED TO PREVENT AIR LEAKAGE ***(2022 CEnC SEC. 150.0(a)3)***
3. PERMANENTLY INSTALLED NIGHT LIGHTS AND NIGHT LIGHTS INTEGRAL TO INSTALLED LUMINAIRES OR EXHAUST FANS SHALL BE RATED TO CONSUME NO MORE THAN FIVE WATTS OF POWER PER LUMINAIRE OR EXHAUST FAN. NIGHT LIGHTS SHALL NOT BE REQUIRED TO BE CONTROLLED BY VACANCY SENSORS ***(Exception 2 to 2022 CEnC SEC. 150.0(k)1A)***
4. ALL INSTALLED LUMINAIRES SHALL BE HIGH EFFICACY IN ACCORDANCE WITH CEnC TABLE 150.0-A. ***(2022 CEnC 150(k)1A)***
5. THE NUMBER OF ELECTRICAL BOXES THAT ARE MORE THAN 5 FEET ABOVE THE FINISHED FLOOR AND DO NOT CONTAIN A LUMINAIRE OR OTHER DEVICE SHALL BE NO GREATER THAN THE NUMBER OF BEDROOMS. THESE ELECTRICAL BOXES MUST BE SERVED BY A DIMMER, VACANCY SENSOR CONTROL, OR FAN SPEED CONTROL. ***(2022 CEnC 150(k)1E)***

FIREBLOCKING/DRAFTSTOPPING NOTES

1. FIREBLOCKING AND DRAFTSTOPPING SHALL BE INSTALLED IN COMBUSTIBLE CONCEALED LOCATIONS IN ACCORDANCE WITH ***2022 CBC SECTION 718***.
2. FIREBLOCKING SHALL COMPLY WITH ***SECTION 718.2.***
   A. ***SECTION 718.2.1*** - FIREBLOCKING MATERIALS SHALL CONSIST OF FOLLOWING MATERIALS:
      1. TWO-INCH NOMINAL LUMBER
      2. TWO THICKNESSES OF ONE-INCH NOMINAL LUMBER WITH BROKEN LAP JOINTS
      3. ONE THICKNESS OF 0.719-INCH WOOD STRUCTURAL PANELS WITH JOINTS BACKED BY 0.719-INCH WOOD STRUCTURAL PANELS
      4. ONE THICKNESS OF 0.75-INCH PARTICLE BOARD WITH JOINTS BACKED BY 0.75-INCH PARTICLE BOARD
      5. ONE-HALF-INCH GYPSUM BOARD
      6. ONE-FOURTH-INCH CEMENT-BASED MILLBOARD
      7. BATTS OR BLANKETS OF MINERAL WOOL, MINERAL FIBER OR OTHER APPROVED MATERIAL INSTALLED IN SUCH A MANNER AS TO BE SECURELY RETAINED IN PLACE
      8. CELLULOSE INSULATION TESTED IN THE FORM AND MANNER INTENDED FOR USE TO DEMONSTRATE ITS ABILITY TO REMAIN IN PLACE AND TO RETARD THE SPREAD OF FIRE AND HOT GASES.
      9. MASS TIMBER COMPLYING WITH SECTION 2304.11.
   B. ***SECTION 718.2.2*** - FIREBLOCKING SHALL BE PROVIDED IN CONCEALED SPACES OF STUD WALLS AND PARTITIONS, INCLUDING FURRED SPACES AND PARALLEL ROWS OF STUDS OR STAGGERED STUDS, AS FOLLOWS:
      1. VERTICALLY AT CEILING AND FLOOR LEVELS
      2. HORIZONTALLY AT INTERVALS NOT EXCEEDING 10 FEET.
   C. ***SECTION 718.2.3*** - FIREBLOCKING SHALL BE PROVIDED AT INTERCONNECTIONS BETWEEN CONCEALED VERTICAL STUD WALL OR PARTITION SPACES AND CONCEALED HORIZONTAL SPACES CREATED BY AN ASSEMBLY OF FLOOR JOISTS OR TRUSSES, AND BETWEEN CONCEALED VERTICAL AND HORIZONTAL SPACES SUCH AS OCCUR AT SOFFITS, DROP CEILINGS AND SIMILAR.
   D. ***SECTION 718.2.4*** - FIREBLOCKING SHALL BE PROVIDED IN CONCEALED SPACES BETWEEN STAIR STRINGERS AT THE TOP AND BOTTOM OF THE RUN. ENCLOSED SPACES UNDER STAIRS SHALL ALSO COMPLY WITH ***2022 CBC SECTION 1011.7.3***.
   E. ***SECTION 718.2.5*** - FIREBLOCKING OF THE ANNULAR SPACE AROUND VENTS, PIPES, DUCTS, CHIMNEYS, AND FIREPLACES AT CEILING AND FLOOR LEVELS SHALL BE INSTALLED WITH A MATERIAL SPECIFICALLY TESTED IN THE FORM AND MANNER INTENDED FOR USE TO DEMONSTRATE ITS ABILITY TO REMAIN IN PLACE AND RESIST THE FREE PASSAGE OF FLAME AND THE PRODUCTS OF COMBUSTION.
   F. ***SECTION 717.2.5.1*** - FACTORY-BUILT CHIMNEY AND FIREPLACES SHALL BE FIREBLOCKED IN ACCORDANCE WITH UL 103 AND UL 127.
3. DRAFTSTOPPING IN FLOOR/CEILING SPACES SHALL COMPLY WITH ***SECTION 718.3.***
   A. DRAFTSTOPPING SHALL BE INSTALLED TO SUBDIVIDE FLOOR/CEILING ASSEMBLIES WHERE REQUIRED BY ***SECTION 708.4.2***. IN OTHER THAN GROUP R OCCUPANCIES, DRAFTSTOPPING SHALL BE INSTALLED TO SUBDIVIDE COMBUSTIBLE FLOOR/CEILING ASSEMBLIES SO THAT HORIZONTAL FLOOR AREAS DO NOT EXCEED 1,000 SQUARE FEET.

      EXCEPTION: BUILDINGS EQUIPPED THROUGHOUT WITH AN AUTOMATIC SPRINKLER SYSTEM IN ACCORDANCE WITH ***SECTION 903.3.1.1.***

   B. DRAFTSTOPPING MATERIALS SHALL BE NOT LESS THAN 1/2-INCH GYPSUM BOARD, 3/8-INCH WOOD STRUCTURAL PANEL, 3/8-INCH PARTICLEBOARD, 1-INCH NOMINAL LUMBER, CEMENT FIBERBOARD, BATTS OR BLANKETS OF MINERAL WOOL OR GLASS FIBER, OR OTHER APPROVED MATERIALS ADEQUATELY SUPPORTED. THE INTEGRITY OF DRAFTSTOPS SHALL BE MAINTAINED.
4. DRAFTSTOPPING IN ATTIC SPACES SHALL COMPLY WITH ***SECTION 718.4.***
   A. DRAFTSTOPPING SHALL BE INSTALLED TO SUBDIVIDE ATTIC SPACES WHERE REQUIRED BY ***SECTION 708.4.2.*** IN OTHER THAN GROUP R, DRAFTSTOPPING SHALL BE INSTALLED TO SUBDIVIDE COMBUSTIBLE ATTIC SPACES AND COMBUSTIBLE CONCEALED ROOF SPACES SUCH THAT ANY HORIZONTAL AREA DOES NOT EXCEED 3,000 SQUARE FEET. VENTILATION OF CONCEALED ROOF SPACES SHALL BE MAINTAINED IN ACCORDANCE WITH ***SECTION 1202.2.1.***

      EXCEPTION: BUILDINGS EQUIPPED THROUGHOUT WITH AN AUTOMATIC SPRINKLER SYSTEM IN ACCORDANCE WITH ***SECTION 903.3.1.1.***

   B. MATERIALS UTILIZED FOR DRAFTSTOPPING OF ATTIC SPACES SHALL COMPLY WITH ***SECTION 718.3.1.***
   C. OPENINGS IN THE PARTITIONS SHALL BE PROTECTED BY SELF-CLOSING DOORS WITH AUTOMATIC LATCHES CONSTRUCTED AS REQUIRED FOR THE PARTITIONS.

UNDER-FLOOR VENTING NOTES

1. THE SPACE BETWEEN THE BOTTOM OF THE FLOOR JOISTS AND THE EARTH UNDER ANY BUILDING EXCEPT SPACES OCCUPIED BY BASEMENTS OR CELLARS SHALL BE PROVIDED WITH VENTILATION ***(CBC 2022 1202.4)***
2. VENTILATION OPENINGS THROUGH FOUNDATION WALLS SHALL BE PROVIDED. THE OPENINGS SHALL BE PLACED SO AS TO PROVIDE CROSS VENTILATION OF THE UNDER-FLOOR SPACE. THE NET AREA OF VENTILATION OPENINGS SHALL BE IN ACCORDANCE WITH ***SECTION 1202.4.1.1*** OR ***1202.4.1.2.*** VENTILATION OPENINGS SHALL BE COVERED FOR THEIR HEIGHT AND WIDTH WITH ANY OF THE FOLLOWING MATERIALS, PROVIDED THAT THE LEAST DIMENSION OF THE COVERING SHALL BE NOT GREATER THAN 1/4 INCH.
   1. PERFORATED SHEET METAL PLATES NOT LESS THAN 0.070 INCH THICK.
   2. EXPANDED SHEET METAL PLATES NOT LESS THAN 0.047 INCH THICK.
   3. CAST-IRON GRILL OR GRATING.
   4. EXTRUDED LOAD-BEARING VENTS.
   5. HARDWARE CLOTH OF 0.035 INCH WIRE OR HEAVIER.
   6. CORROSION-RESISTANT WIRE MESH, WITH THE LEAST DIMENSION NOT GREATER THAN 1/8 INCH.
   7. OPERABLE LOUVERS, WHERE VENTILATION IS PROVIDED IN ACCORDANCE WITH ***SECTION 1202.4.1.2.***
3. THE NET AREA OF VENTILATION OPENINGS FOR CRAWL SPACES WITH UNCOVERED EARTH FLOORS SHALL BE NOT LESS THAN 1 SQUARE FOOT FOR EACH 150 SQUARE FEET OF CRAWL SPACE AREA. ***(CBC 2022 1202.4.1.1)***
4. THE NET AREA OF VENTILATION OPENINGS FOR CRAWL SPACES WITH THE GROUND SURFACE COVERED WITH A CLASS I VAPOR RETARDER SHALL BE NOT LESS THAN 1 SQUARE FOOT FOR EACH 1,500 SQUARE FEET OF CRAWL SPACE AREA. ***(CBC 2022 1202.4.1.2)***
5. CRAWL SPACES SHALL BE PROVIDED WITH NOT LESS THAN ONE ACCESS OPENING THAT SHALL BE NOT LESS THAN 18 INCHES BY 24 INCHES. ***(CBC 2022 1209.1)***

WUI REQUIREMENTS

1. ROOF COVERING SHALL COMPLY WITH ***2022 CBC 705A.2.***UNDERLAYMENT SHALL BE ONE LAYER OF MINIMUM 72 POUND MINERAL-SURFACED NONPERFORATED CAP SHEET COMPLYING WITH ASTM D3909 INSTALLED OVER THE COMBUSTIBLE DECKING.
2. ROOF VALLEYS SHALL COMPLY WITH ***2022 CBC 705A.3***. VALLEY FLASHING SHALL BE NOT LESS THAN 26 GAGE GALVANIZED SHEET CORROSIVE RESISTANT METAL INSTALLED OVER NOT LESS THAN ONE LAYER OF MINIMUM 72 POUND MINERAL-SURFACED NONPERFORATED CAP SHEET COMPLYING WITH ASTM D3909, AT LEAST 36 INCHES WIDE RUNNING THE FULL LENGTH OF THE VALLEY.
3. ROOF GUTTERS SHALL COMPLY WITH ***2022 CBC 705A.4***. ROOF GUTTERS SHALL BE PROVIDE WITH THE MEANS TO PREVENT THE ACCUMULATION OF LEAVES AND DEBRIS IN THE GUTTER
4. VENTILATION OPENINGS SHALL COMPLY WITH ***2022 CBC 706A*** - VENTILATION OPENINGS FOR ENCLOSED ATTICS, GABLE ENDS, RIDGE ENDS, UNDER EAVES AND CORNICES, ENCLOSED EAVE SOFFIT SPACES, ENCLOSED RAFTER SPACES FORMED WHERE CEILINGS ARE APPLIED DIRECTLY TO THE UNDERSIDE OF ROOF RAFTERS, UNDERFLOOR VENTILATION, FOUNDATIONS AND CRAWL SPACES, OR ANY OTHER OPENING INTENDED TO PERMIT VENTILATION, EITHER IN A HORIZONTAL OR VERTICAL PLANE, SHALL BE FULLY COVERED WITH METAL WIRE MESH, VENTS, OTHER MATERIALS, OR OTHER DEVICES. REFER TO ***SECTIONS 1202, 706A.1*** THROUGH ***706A.3*** FOR ADDITIONAL INFORMATION.
5. EXTERIOR COVERINGS SHALL COMPLY WITH ***2022 CBC 707A3.*** EXTERIOR WALL COVERINGS SHALL COMPLY WITH ONE OR MORE OF THE FOLLOWING REQUIREMENTS (EXCEPT AS PERMITTED FOR EXTERIOR WALL ASSEMBLIES COMPLYING WITH ***SECTION 707A.4***): BE OF NONCOMBUSTIBLE MATERIAL, IGNITION-RESISTANT MATERIAL LABELED FOR EXTERIOR USE AND MEETING THE REQUIREMENTS OF ***SECTION 704A.2***, OR FIRE-RETARDANT-TREATED WOOD LABELED FOR EXTERIOR USE AND MEETING THE REQUIREMENTS OF ***SECTION 2303.2***.
6. EXTERIOR WALL ASSEMBLIES SHALL COMPLY WITH ***2022 CBC 707A.4***. EXTERIOR WALL ASSEMBLIES OF BUILDINGS OR STRUCTURES SHALL BE CONSTRUCTED USING ONE OR MORE OF THE FOLLOWING METHODS (UNLESS THEY ARE COVERED BY AN EXTERIOR WALL COVERING COMPLYING WITH ***SECTION 707A.3***): HEAVY TIMBER EXTERIOR WALL ASSEMBLY, LOG WALL CONSTRUCTION ASSEMBLY, ASSEMBLY THAT MEET THE PERFORMANCE CRITERIA IN ACCORDANCE WITH THE TEST PROCEDURES FOR A 10-MINUTE DIRECT FLAME CONTACT EXPOSURE TEST SET FORTH IN SFM STANDARD 12-7A-1, ASSEMBLY SUITABLE FOR EXTERIOR FIRE EXPOSURE WITH A 1-HOUR FIRE-RESISTANCE RATING, ASSEMBLY SUITABLE FOR EXTERIOR FIRE EXPOSURE CONTAINING ONE LAYER OF 5/8-INCH TYPE X GYPSUM SHEATHING APPLIED BEHIND THE EXTERIOR WALL COVERING OR CLADDING ON THE EXTERIOR SIDE OF THE FRAMING, ASSEMBLY SUITABLE FOR EXTERIOR FIRE EXPOSURE CONTAINING ANY OF THE GYPSUM PANEL AND SHEATHING PRODUCTS LISTED IN THE GYPSUM ASSOCIATION FIRE RESISTANCE DESIGN MANUAL AS COMPLYING WITH A 1-HOUR FIRE-RESISTANCE RATING.

rrm design group
rrmdesign.com | (805) 543-1794
3765 SOUTH HIGUERA STREET, SUITE 102
SAN LUIS OBISPO, CA 93401

THE INCLUDED DRAWINGS, SPECIFICATIONS, IDEAS, DESIGNS AND ARRANGEMENTS REPRESENTED THEREBY ARE AND SHALL REMAIN THE PROPERTY OF RRM DESIGN GROUP AND NO PART THEREOF SHALL BE COPIED, DISCLOSED TO OTHERS OR USED IN CONNECTION WITH ANY WORK OR PROJECT OTHER THAN THE SPECIFIED PROJECT FOR WHICH THEY HAVE BEEN PREPARED AND DEVELOPED WITHOUT THE WRITTEN CONSENT OF RRM DESIGN GROUP. VISUAL CONTACT WITH THESE DRAWINGS OR SPECIFICATIONS SHALL CONSTITUTE CONCLUSIVE EVIDENCE OF ACCEPTANCE OF THESE RESTRICTIONS. SUBMITTAL OF THESE DOCUMENTS FOR PUBLIC AGENCY REVIEW SHALL NOT BE CONSIDERED A WAIVER OF RRM DESIGN GROUP'S RIGHTS.
RRM DESIGN GROUP COPYRIGHT 2022
RRM IS A CALIFORNIA CORPORATION

LICENSED ARCHITECT
THADDEUS SCOTT LUPTON
C39678
10-31-25
RENEWAL DATE
STATE OF CALIFORNIA

CONSULTANT

AGENCY

FOURTH ST COMMUNITY CENTER AND PARK
HENDERSON AVE., PORTERVILLE, CA 93257

GENERAL NOTES

NO.	REVISION	DATE
△		
△		
△		
△		
△		
△		

PLAN CHECK REVISION 2

PROJECT MANAGER TSL	
DRAWN BY MC, NA, PM	**CHECKED BY** DD, KF
DATE 2024.09.17	
PROJECT NUMBER 2883-01-RC22	
SHEET GA101	

9/20/2024 11:04:05 AM
Autodesk Docs://2883-01_Porterville Fourth St Community Center/2883-01-RC22_Porterville_v22.rvt

DOORS

1. EGRESS DOORS ***(2022 CBC 1010.1)***
   a. MEANS OF EGRESS DOORS SHALL MEET THE REQUIREMENTS OF ***2022 CBC 1010.1***
   b. DOORS SHALL SWING IN THE DIRECTION OF EGRESS TRAVEL WHERE SERVING A ROOM OR AREAS CONTAINING AN OCCUPANT LOAD OF 50 OR MORE PERSONS OR A GROUP H OCCUPANCY ***(2022 CBC 1010.1.2.1)***
   c. ALL EXTERIOR DOOR LANDINGS ARE TO BE NOT MORE THAN 2% IN RUNNING AND CROSS SLOPE ***(2022 CBC1010.1.4)***
   d. DOORS IN THE FULLY OPEN POSITION SHALL NOT REDUCE A REQUIRED DIMENSION BY MORE THAN 7 INCHES. WHERE A LANDING SERVES AN OCCUPANT LOAD OF 50 OR MORE, DOORS IN ANY POSITION SHALL NOT REDUCE THE LANDING TO LESS THAN ONE-HALF ITS REQUIRED WIDTH. DOOR LANDINGS SHALL HAVE A LENGTH MEASURED IN THE DIRECTION OF TRAVEL OF NOT LESS THAN 44" EXCEPT AS NOTED PER ***2022 CBC 1010.1.5.***
   e. EGRESS DOORS SHALL BE READILY OPENABLE FROM BOTH SIDES WITHOUT THE USE OF A KEY OR SPECIAL KNOWLEDGE OR EFFORT EXCEPT AS SPECIFICALLY PERMITTED PER ***2022 CBC 1010.2.***
   f. THE UNLATCHING OF ANY DOOR OR LEAF SHALL NOT REQUIRE MORE THAN ONE OPERATION EXCEPT AS NOTED PER ***2022 CBC 1010.2.1.***
   g. SWINGING DOORS SERVING A GROUP H OCCUPANCY AND SWINGING DOORS SERVING ROOMS OR SPACES WITH AN OCCUPANT LOAD OF 50 OR MORE IN A GROUP A OR E *OCCUPANCY ASSEMBLY AREA NOT CLASSIFIED AS AN ASSEMBLY OCCUPANCY* E, I-2 OR I-2.1 *OCCUPANCIES* SHALL NOT BE PROVIDED WITH A LATCH OR LOCK OTHER THAN PANIC HARDWARE OR FIRE EXIT HARDWARE EXCEPT AS NOTED PER ***2022 CBC 1010.2.9***.
   h. EXIT OR EXIT ACCESS DOORS SERVING TRANSFORMER VAULTS, ROOMS DESIGNATED FOR BATTERIES OR ENERGY STORAGE SYSTEMS, OR MODULAR DATA CENTERS SHALL BE EQUIPPED WITH PANIC HARDWARE OR FIRE EXIT HARDWARE.
      ROOMS CONTAINING ELECTRICAL EQUIPMENT RATED 800 AMPERES OR MORE, THAT CONTAIN OVERCURRENT DEVICES, SWITCHING DEVICES OR CONTROL DEVICES AND WHERE THE EXIT OR EXIT ACCESS DOOR IS LESS THAN 25 FEET (7620 MM) FROM THE EQUIPMENT WORKING SPACE AS REQUIRED BY NFPA 70, SUCH DOORS SHALL NOT BE PROVIDED WITH A LATCH OR LOCK OTHER THAN PANIC HARDWARE OR FIRE EXIT HARDWARE. THE DOORS SHALL SWING IN THE DIRECTION OF EGRESS TRAVEL ***(2022 CBC 1010.2.9.2)***
   i. REQUIREMENTS FOR DOOR HANDLES, PULLS, LATCHES, LOCKS AND OTHER OPERATING DEVICES AT EGRESS DOORS IN OTHER THAN GROUP R AND M OCCUPANCIES WITH AN OCCUPANT LOAD OF 10 OR LESS SHALL COMPLY WITH ***2022 CALIFORNIA REFERENCED STANDARDS CODE SFM STANDARD 12-10-202***
      - HARDWARE SHALL HAVE A SMOOTH FINISH WITH NO SHARP OR BURRED EDGES
      - LEVER-ACTUATED LATCHES OR LOCKS SHALL BE CURVED WITH A RETURN TO WITHIN 1/2" OF THE DOOR FACE
2. ACCESSIBILITY REQUIREMENTS AT DOORS, DOORWAYS, AND GATES ***(2022 CBC 11B-404)***
   a. MINIMUM CLEAR WIDTH AT ACCESSIBLE DOORS IS 32" MEASURED BETWEEN THE FACE OF THE DOOR AND THE STOP, WITH THE DOOR OPEN 90 DEGREES ***(2022 CBC 11B-404.2.3)***
   b. MANEUVERING CLEARANCES SHALL COMPLY WITH ***(2022 CBC 11B-404.2.4).*** REFER TO PLANS FOR MINIMUM CLEARANCES
   c. THRESHOLDS SHALL BE 1/2" HIGH MAX ***(2022 CBC 11B-404.2.5)***; REFER TO DOOR DETAILS
   d. MAXIMUM DOOR OPENING FORCE OF 5 LBS. AT EXTERIOR AND INTERIOR DOORS, AND AS ALLOWABLE BY THE ADMINISTRATIVE AUTHORITY AT FIRE DOORS (NOT TO EXCEED 15 LBS). ***(2022 CBC 11B-404.2.9)***
   e. HAND-ACTIVATED DOOR OPENING HARDWARE, HANDLES, PULLS, LATCHES, LOCKS AND OTHER OPERATING DEVICES SHALL HAVE A SHAPE THAT IS EASY TO GRASP WITH ONE HAND AND DOES NOT REQUIRE TIGHT GRASPING, TIGHT PINCHING OR TWISTING OF THE WRIST TO OPERATE ***(2022 CBC 11B-404.2.7 AND 2022 CBC 11B-309.4)***
   f. OPERABLE PARTS SHALL BE BETWEEN 34 INCHES AND 44 INCHES ABOVE THE FLOOR ***(2022 CBC 11B-404.2.7)***
   g. CLOSERS SHALL BE ADJUSTED SO THAT FROM AN OPEN POSITION OF 90 DEGREES, THE TIME REQUIRED TO MOVE THE DOOR TO A POSITION OF 12 DEGREES FROM THE LATCH IS 5 SECONDS MINIMUM ***(2022 CBC 11B-404.2.8.1)***
   h. SWINGING DOOR AND GATE SURFACES WITHIN 10" OF THE FF OR GROUND SHALL HAVE A SMOOTH SURFACE ON THE PUSH SIDE EXTENDING THE FULL WIDTH OF THE DOOR OR GATE EXCEPT AS NOTED ***PER 2022 CBC 11B-404.2.10***
3. OPENING PROTECTIVES AND FIRE DOOR ASSEMBLIES ***(2022 CBC 716 AND NFPA 80)***
   a. FIRE DOORS SHALL COMPLY WITH THE PROVISIONS OF ***2022 CBC 716 AND NFPA 80***
   b. FIRE DOORS SHALL BE LATCHING AND SELF- OR AUTOMATIC-CLOSING PER ***2022 CBC 716.2.6.1***
   c. SIDE-HINGED DOORS SHALL BE TESTED IN ACCORDANCE WITH NFPA 252 OR UL 10C ***(2022 CBC 716.2.1.1)***
   d. UNLESS OTHERWISE SPECIFICALLY PERMITTED, SINGLE SIDE-HINGED SWINGING FIRE DOORS AND BOTH LEAVES OF PAIRS OF SIDE-HINGES SWINGING FIRE DOORS SHALL BE PROVIDED WITH AN ACTIVE LATCH BOLT THAT WILL SECURE THE DOOR WHEN IT IS CLOSED ***2022 CBC 716.2.6.2***
   e. FIRE DOOR ASSEMBLIES REQUIRED TO HAVE A MINIMUM FIRE PROTECTION RATING OF 20 MINUTES WHERE LOCATED IN CORRIDOR WALLS OR SMOKE BARRIER WALLS HAVING A FIRE-RESISTANCE RATING IN ACCORDANCE WITH TABLE 716.1(2) SHALL BE TESTED IN ACCORDANCE WITH NFPA 252 OR UL 10C WITHOUT THE HOSE STREAM TEST EXCEPT AS NOTED PER ***2022 CBC 716.2.2.1***
   f. FIRE DOOR ASSEMBLIES THAT SERVE AS SMOKE AND DRAFT CONTROL ASSEMBLIES SHALL BE TESTED IN ACCORDANCE WITH UL 1784 ***(2022 CBC 716.2.1.4)***
   g. FIRE DOOR ASSEMBLIES SHALL BE LABELED BY AN APPROVED AGENCY. THE LABELS SHALL COMPLY WITH NFPA 80, AND SHALL BE PERMANENTLY AFFIXED TO THE DOOR OR FRAME ***2022 CBC 716.2.9***
   h. SMOKE AND DRAFT CONTROL DOORS COMPLYING WITH UL 1784 SHALL BE LABELED IN ACCORDANCE WITH SECTION ***2022 CBC 716.2.9.1*** AND SHALL SHOW THE LETTER "S" ON THE FIRE RATING LABEL OF THE DOOR PER ***2022 CBC 716.2.9.3***
   i. PER ***2022 CBC 716.2.9.1,*** FIRE DOORS SHALL BE LABELED SHOWING THE NAMES OF THE MANUFACTURER OR OTHER IDENTIFICATION READILY TRACEABLE BACK TO THE MANUFACTURER, THE NAME OR TRADEMARK OF THE THIRD-PARTY INSPECTION AGENCY, THE FIRE PROTECTION RATING AND, WHERE REQUIRED FOR FIRE DOORS IN INTERIOR EXIST STAIRWAYS AND RAMPS AND EXIT PASSAGEWAYS BY ***2022 CBC SECTION 716.2.2.3***, THE MAXIMUM TRANSMITTED TEMPERATURE END POINT.
4. GLAZING
   a. GLAZING IN ALL DOOR ASSEMBLIES AND FIRE WINDOW ASSEMBLIES SHALL COMPLY WITH ***2022 CBC CHAPTER 24 - SAFETY GLAZING.*** LOCATIONS TO BE NOTED WITH "T".
   b. GLAZING USED IN FIRE DOOR ASSEMBLIES AND FIRE WINDOW ASSEMBLIES SHALL COMPLY WITH ***2022 CBC 716.1.2*** IN ADDITION TO THE REQUIREMENTS OF SECTIONS ***2022 CBC 716.2*** AND ***2022 CBC 716.3*** RESPECTIVELY, AND NFPA 80
   c. IN 20-MIN FIRE DOOR ASSEMBLIES, GLAZING SHALL HAVE A MIN. FIRE-PROTECTION-RATED GLAZING OF 20 MINUTES AND SHALL BE EXEMPT FROM THE HOSE STREAM TEST ***(2022 CBC 716.2.5.3)*** (TRANSOM AND SIDE-LITES SEE ***2022 CBC 716.2.5.4***)
   d. FIRE PROTECTION RATED GLAZING SHALL BE PROHIBITED IN FIRE WALLS AND FIRE BARRIERS RATED GREATER THAN 1 HOUR EXCEPT AS PROVIDED IN ***2022 CBC 716.2.5.1.2.1 AND 716.2.5.1.2.2***

WINDOWS

1. WINDOWS IN HAZARDOUS LOCATIONS REQUIRE SAFETY GLAZING MATERIALS. ***(2022 CBC SEC. 2406.4)***
   a. GLAZING IN AN INDIVIDUAL FIXED OR OPERABLE PANEL ADJACENT TO A DOOR WHERE THE NEAREST EXPOSED EDGE OF THE GLAZING IS WITHIN A 24-INCH ARC OF EITHER VERTICAL EDGE OF THE DOOR IN A CLOSED POSITION AND WHERE THE BOTTOM EXPOSED EDGE OF THE GLAZING IS LESS THAN 60 INCHES ABOVE THE WALKING SURFACE SHALL BE CONSIDERED TO BE A HAZARDOUS LOCATION ***(2022 CBC 2406.4.2)***
   b. GLAZING IN AN INDIVIDUAL FIXED OR OPERABLE PANEL, WHICH MEETS ALL OF THE FOLLOWING CONDITIONS SHALL BE CONSIDERED TO BE A HAZARDOUS LOCATION ***(2022 CBC 2406.4.3)***
      - EXPOSED AREA OF AN INDIVIDUAL PANE GREATER THAN 9 SF
      - EXPOSED BOTTOM EDGE LESS THAN 18 INCHES ABOVE THE FLOOR
      - EXPOSED TOP EDGE GREATER THAN 36 INCHES ABOVE THE FLOOR
      - ONE OR MORE WALKING SURFACE(S) WITHIN 36 INCHES HORIZONTALLY OF THE PLANE OF THE GLAZING
   c. GLAZING WHERE THE BOTTOM EXPOSED EDGE OF THE GLAZING IS LESS THAN 60 INCHES ABOVE THE PLANE OF THE ADJACENT WALKING SURFACE OF STAIRWAYS, LANDING BETWEEN FLIGHTS OF STAIRS AND RAMPS SHALL BE CONSIDERED TO BE A HAZARDOUS LOCATION EXCEPT AS NOTED PER ***2022 CBC 2406.4.6***
   d. GLAZING ADJACENT TO THE LANDING AT THE BOTTOM OF A STAIRWAY WHERE THE GLAZING IS LESS THAN 60 INCHES ABOVE THE LANDING AND WITHIN A 60 INCH HORIZONTAL ARC THAT IS LESS THAN 180 DEGREES FROM THE BOTTOM TREAD NOSING SHALL BE CONSIDERED TO BE A HAZARDOUS LOCATION EXCEPT AS NOTED PER ***2022 CBC 2406.4.7***
2. AT HAZARDOUS LOCATIONS REQUIRING SAFETY GLAZING, PROVIDE IDENTIFICATION FOR EACH PANE PER ***2022 CBC 2406.3***
3. EGRESS WINDOWS SHALL HAVE A CLEAR OPENING WITH A MAX SILL HEIGHT OF 44" AFF, MIN NET CLEAR OPENING FOR EMERGENCY ESCAPE SHALL BE 5.7 SF. EXCEPTION: MIN 5 SF AT GROUND FLOOR, MINIMUM NET CLEAR OPENING DIMENSIONS: HEIGHT: 24", WIDTH: 20". EGRESS WINDOWS SHALL BE OPERATIONAL FROM THE INSIDE OF THE ROOM WITHOUT THE USE OF KEYS, TOOLS OR SPECIAL KNOWLEDGE. ***(2022 CBC SECTION 1031)***
4. WINDOWS IN GROUP R-1, R-2, AND R-3 BUILDINGS INCLUDING DWELLING UNITS WHERE THE BOTTOM OF THE CLEAR OPENING OF AN OPERABLE WINDOW IS LOCATED LESS THAN 36 INCHES ABOVE THE FINISHED FLOOR AND MORE THAN 72 INCHES ABOVE THE FINISHED GRADE OR OTHER SURFACE BELOW ON THE EXTERIOR OF THE BUILDING, SHALL COMPLY WITH ONE OF THE FOLLOWING PER ***2022 CBC 1015.8:***
   - OPERABLE WINDOWS WHERE THE OPENINGS WILL NOT ALLOW A 4-INCH DIAMETER SPHERE TO PASS THROUGH THE OPENING WHEN THE WINDOW IS IN ITS LARGEST OPENED POSITION
   - OPERABLE WINDOWS WHERE THE OPENINGS ARE PROVIDED WITH WINDOW FALL PREVENTION DEVICES THAT COMPLY WITH ASTM F2090
   - OPERABLE WINDOWS THAT ARE PROVIDED WITH WINDOW OPENING CONTROL DEVICES THAT COMPLY WITH ***2022 CBC SECTION 1015.8.1***

ABBREVIATIONS

A/C	AIR CONDITIONING
ABV	ABOVE
ACOUS	ACOUSTICAL
ACT	ACOUSTICAL CEILING TILE
ADA	AMERICANS WITH DISABILITIES ACT
AFCI	ARC FAULT CIRCUIT INTERRUPTER
AFF	ABOVE FINISH FLOOR
AL	ALUMINUM
ALT	ALTERNATE
ARCH	ARCHITECT(URAL)
BD	BOARD
BDRM	BEDROOM
BET	BETWEEN
BIT	BITUMINOUS
BLDG	BUILDNG
BLKG	BLOCKING
BLW	BELOW
BM	BEAM
BOT	BOTTOM
BUR	BUILT UP ROOF
CB	CATCH BASIN
CBC	CALIFORNIA BUILDING CODE
CEM	CEMENT
CFM	CUBIC FEET PER MINUTE
CIP	CAST IN PLACE
CJ	CONTROL JOINT
CL	CENTER LINE
CLG	CEILING
CLO	CLOSET
CLR	CLEAR
CMU	CONCRETE MASONRY UNIT
CO	CLEAN OUT
COL	COLUMN
CONC	CONCRETE
CONST	CONSTRUCTION
CONT	CONTINUOUS
CONTR	CONTRACTOR
CPT	CARPET
CT	CERAMIC TILE
CTR	CENTER
DBL	DOUBLE
DF	DRINKING FOUNTAIN
DIA	DIAMETER, DIAPHRAGM
DIM	DIMENSION
DN	DOWN
DR	DOOR
DS	DOWN SPOUT
DTL	DETAIL
DW	DISHWASHER
DWG	DRAWING
(E)	EXISTING
E	EAST
EA	EACH
EJ	EXPANSION JOINT
EL, ELEV	ELEVATION
ELEC	ELECTRIC
ENCL	ENCLOSURE
EQ	EQUAL
EQUIP	EQUIPMENT
EXH	EXHAUST
EXP	EXPANSION
EXT	EXTERIOR
FACP	FIRE ALARM CONTROL PANEL
FAU	FORCED AIR UNIT
FAWP	FLUID APPLIED WATERPROOFING
FD	FLOOR DRAIN
FDC	FIRE DEPARTMENT CONNECTION
FE	FIRE EXTINGUISHER
FEC	FIRE EXTINGUISHER CABINET
FF	FINISHED FLOOR ELEVATION
FG	FINISHED GRADE
FH	FIRE HYDRANT
FHC	FIRE HOSE CABINET
FIN	FINISH
FIXT	FIXTURE
FLR	FLOOR
FLUOR	FLOURESCENT
FND	FOUNDATION
FO	FACE OF
FOC	FACE OF CONCRETE
FOF	FACE OF FINISH
FOIC	FURNISHED BY OWNER INSTALLED BY CONTRACTOR
FOM	FACE OF MASONRY
FOS	FACE OF STUD
FRP	FIBERGLASS REINFORCED PANELS
FT	FOOT OR FEET
FTG	FOOTING
GA	GAUGE, GAGE
GALV	GALVANIZED
GB	GRAB BAR
GC	GENERAL CONTRACTOR
GFCI	GROUND FAULT CIRCUIT INTERRUPTER
GWB	GYPSUM BOARD
GYP	GYPSUM
HB	HOSE BIBB
HC	HOLLOW CORE
HDWD	HARDWOOD
HDWR	HARDWARE
HGT	HEIGHT
HM	HOLLOW METAL
HORIZ	HORIZONTAL
HVAC	HEATING, VENTILATION, A/C
ID	INSIDE DIAMETER
IIC	IMPACT INSULATION CLASS
IN	INCH
INCAND	INCANDESCENT
INSUL	INSULATION, INSULATED
INT	INTERIOR
JC	JANITORS CLOSET
JT	JOINT
LAM	LAMINATE
LAV	LAVATORY
LBS	POUNDS
LEED	LEADERSHIP IN ENERGY AND ENVIRONMENTAL DESIGN
LF	LINEAR FEET
LIN	LINEN CLOSET
LINO	LINOLEUM
LT(G)	LIGHT(ING)
LVL	LAMINATED VENEER LUMBER
LVT	LUXURY VINYL TILE
LW	LIGHTWEIGHT
MAX	MAXIMUM
MDF	MEDIUM DENSITY FIBERBOARD
MECH	MECHANICAL
MEMB	MEMBRANE
MEP	MECHANICAL, ELECTRICAL, PLUMBING
MFR	MANUFACTURER
MIN	MINIMUM
MISC	MISCELLANEOUS
MO	MASONRY OPENING
MTD	MOUNTED
MTL	METAL
N	NORTH
NIC	NOT IN CONTRACT
NO	NUMBER
NOM	NOMINAL
NTS	NOT TO SCALE
O.P.	OVERFLOW PIPE
OC	ON CENTER
OD	OVERFLOW DRAIN
OFF	OFFICE
OH	OPPOSITE HAND
OPG	OPENING
OPP	OPPOSITE
(P)	PROPOSED
PERM	PERIMETER
PERP	PERPENDICULAR
PG	PAINT GRADE
PL	PLATE, PROPERTY LINE
PLAM	PLASTIC LAMINATE
PLBG	PLUMBING
PLYWD	PLYWOOD
PNL	PANEL
PP	POWER POLE
PR	PAIR
PRTN	PARTITION
PSF	POUNDS PER SQUARE FOOT
PSI	POUNDS PER SQUARE INCH
PSL	PARALLEL STRAND LUMBER
PT	PRESSURE TREATED
PTD	PAINTED
PV	PHOTO VOLTAIC
PVC	POLYVINYL CHLORIDE
PVMT	PAVEMENT
QTY	QUANTITY
R	RADIUS, RISER
RB	RUBBER BASE
RCP	REFLECTED CEILING PLAN
RD	ROOF DRAIN
REF	REFRIGERATOR
REINF	REINFORCED
REQD	REQUIRED
RH	RIGHT HAND
RM	ROOM
RO	ROUGH OPENING
RTU	ROOF TOP UNIT (MECH)
S	SOUTH
SAFB	SOUND ATTENUATION FIBER BATT
SAWP	SELF ADHEREING WATERPROOFING
SC	SCUPPER/SOLID CORE
SCHED	SCHEDULE
SEAL	SEALANT
SECT	SECTION
SF	SQUARE FOOT
SHT	SHEET
SHTHG	SHEATHING
SIM	SIMILAR
SM	SHEET METAL
SPEC	SPECIFICATION
SQ	SQURE
SS	SOLID SURFACE
SSTL	STAINLESS STEEL
STC	SOUND TRANSMISSION CLASS
STD	STANDARD
STL	STEEL
STOR	STORAGE
STRUCT	STRUCTURAL
SUSP	SUPSPENDED
SV	SHEET VINYL
SYM	SYMMMETRICAL
T	TREAD
T&G	TONGUE & GROOVE
TEL	TELEPHONE
TEMP	TEMPERED
TER	TERRAZZO
THK	THICK
THR	THRESHOLD
TJI	TRUSS JOIST I-JOIST
TO	TOP OF
TOS	TOP OF SLAB
TOW	TOP OF WALL
TRANS	TRANSFORMER
TV	TELEVISION
TYP	TYPICAL
UFAS	UNIFORM FEDERAL ACCESSIBILITY STANDARDS
UG	UNDERGROUND
UNFIN	UNFINISHED
UNO	ULNESS NOTED OTHERWISE
UV	UTRAVIOLET
VCT	VINYL COMPOSITION TILE
VERT	VERTICAL
VIF	VERIFY IN FIELD
VTR	VENT TERMINATION PIPE
VWC	VINYL WALL COVERING
W	WEST
W/	WITH
W/D	WASHER DRYER
W/O	WITHOUT
WC	WATERCLOSET
WD	WOOD
WDW	WINDOW
WH	WATER HEATER
WI	WROUGHT IRON
WIN	WINDOW
WP	WATERPROOF(ING)
WR	WEATHER RESISTIVE
WRB	WATER RESISTIVE BARRIER
WSCT	WAINSCOT
WT	WEIGHT
WWF	WELDED WIRE FABRIC
YD	YARD

SYMBOLS

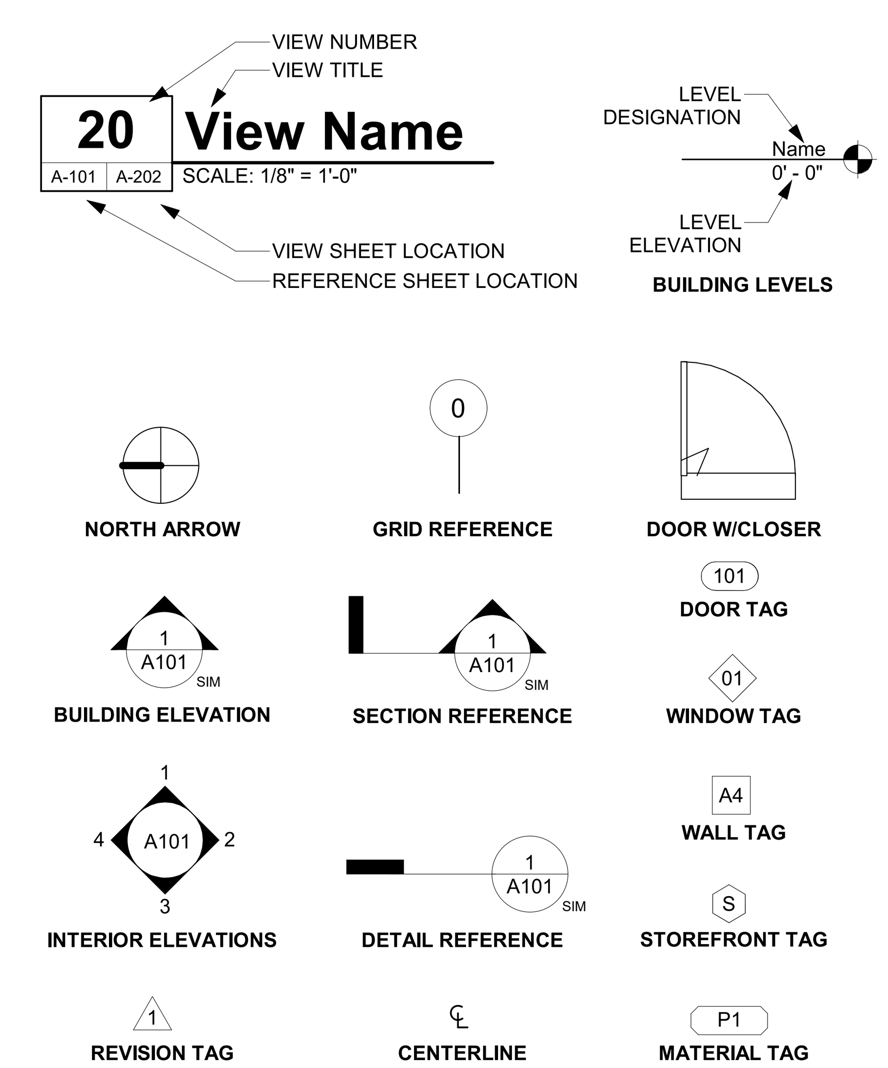

rrm design group
rrmdesign.com | (805) 543-1794
3765 SOUTH HIGUERA STREET, SUITE 102
SAN LUIS OBISPO, CA 93401

THE INCLUDED DRAWINGS, SPECIFICATIONS, IDEAS, DESIGNS AND ARRANGEMENTS REPRESENTED THEREBY ARE AND SHALL REMAIN THE PROPERTY OF RRM DESIGN GROUP AND NO PART THEREOF SHALL BE COPIED, DISCLOSED TO OTHERS OR USED IN CONNECTION WITH ANY WORK OR PROJECT OTHER THAN THE SPECIFIED PROJECT FOR WHICH THEY HAVE BEEN PREPARED AND DEVELOPED WITHOUT THE WRITTEN CONSENT OF RRM DESIGN GROUP. VISUAL CONTACT WITH THESE DRAWINGS OR SPECIFICATIONS SHALL CONSTITUTE CONCLUSIVE EVIDENCE OF ACCEPTANCE OF THESE RESTRICTIONS. SUBMITTAL OF THESE DOCUMENTS FOR PUBLIC AGENCY REVIEW SHALL NOT BE CONSIDERED A WAIVER OF RRM DESIGN GROUP'S RIGHTS.
RRM DESIGN GROUP COPYRIGHT 2022
RRM IS A CALIFORNIA CORPORATION

LICENSED ARCHITECT
THADDEUS SCOTT LUPTON
C39678
10-31-25
RENEWAL DATE
STATE OF CALIFORNIA

CONSULTANT

AGENCY

FOURTH ST COMMUNITY CENTER AND PARK
HENDERSON AVE., PORTERVILLE, CA 93257

GENERAL NOTES

NO.	REVISION	DATE
△		
△		
△		
△		
△		
△		

PLAN CHECK REVISION 2

PROJECT MANAGER TSL	
DRAWN BY MC, NA, PM	CHECKED BY DD, KF
DATE 2024.09.17	
PROJECT NUMBER 2883-01-RC22	
SHEET GA102	

9/20/2024 11:04:06 AM
Autodesk Docs://2883-01_Porterville Fourth St Community Center/2883-01-RC22_Porterville_v22.rvt

2022 CALIFORNIA GREEN BUILDING STANDARDS CODE

NONRESIDENTIAL MANDATORY MEASURES, SHEET 1 (JANUARY 2023)

CHAPTER 1 - ADMINISTRATION

SECTION 101 GENERAL

101.1 TITLE.
THESE REGULATIONS SHALL BE KNOWN AS THE *CALIFORNIA GREEN BUILDING STANDARDS CODE* AND MAY BE CITED AS SUCH AND WILL BE REFERRED TO HEREIN AS "THIS CODE." IT IS INTENDED THAT IT SHALL ALSO BE KNOWN AS THE *CALGREEN CODE*. THE *CALIFORNIA GREEN BUILDING STANDARDS CODE* IS PART 11 OF THIRTEEN PARTS OF THE OFFICIAL COMPILATION AND PUBLICATION OF THE ADOPTION, AMENDMENT AND REPEAL OF BUILDING REGULATIONS TO THE *CALIFORNIA CODE OF REGULATIONS*, TITLE 24, ALSO REFERRED TO AS THE *CALIFORNIA BUILDING STANDARDS CODE*.

101.2 PURPOSE.
THE PURPOSE OF THIS CODE IS TO IMPROVE PUBLIC HEALTH, SAFETY AND GENERAL WELFARE BY ENHANCING THE DESIGN AND CONSTRUCTION OF BUILDINGS THROUGH THE USE OF BUILDING CONCEPTS HAVING A REDUCED NEGATIVE IMPACT OR POSITIVE ENVIRONMENTAL IMPACT AND ENCOURAGING SUSTAINABLE CONSTRUCTION PRACTICES IN THE FOLLOWING CATEGORIES:

1. PLANNING AND DESIGN.
2. ENERGY EFFICIENCY.
3. WATER EFFICIENCY AND CONSERVATION.
4. MATERIAL CONSERVATION AND RESOURCE EFFICIENCY.
5. ENVIRONMENTAL QUALITY.

101.3 SCOPE.
THE PROVISIONS OF THIS CODE SHALL APPLY TO THE PLANNING, DESIGN, OPERATION, CONSTRUCTION, USE AND OCCUPANCY OF EVERY NEWLY CONSTRUCTED BUILDING OR STRUCTURE, UNLESS OTHERWISE INDICATED IN THIS CODE, THROUGHOUT THE STATE OF CALIFORNIA.
IT IS NOT THE INTENT THAT THIS CODE SUBSTITUTE OR BE IDENTIFIED AS MEETING THE CERTIFICATION REQUIREMENTS OF ANY GREEN BUILDING PROGRAM.

SECTION 102 CONSTRUCTION DOCUMENTS AND INSTALLATION VERIFICATION

102.1 SUBMITTAL DOCUMENTS.
CONSTRUCTION DOCUMENTS AND OTHER DATA SHALL BE SUBMITTED IN ONE OR MORE SETS WITH EACH APPLICATION FOR A PERMIT. WHERE SPECIAL CONDITIONS EXIST, THE ENFORCING AGENCY IS AUTHORIZED TO REQUIRE ADDITIONAL CONSTRUCTION DOCUMENTS TO BE PREPARED BY A LICENSED DESIGN PROFESSIONAL AND MAY BE SUBMITTED SEPARATELY.

EXCEPTION: THE ENFORCING AGENCY IS AUTHORIZED TO WAIVE THE SUBMISSION OF CONSTRUCTION DOCUMENTS AND OTHER DATA NOT REQUIRED TO BE PREPARED BY A LICENSED DESIGN PROFESSIONAL.

102.2 INFORMATION ON CONSTRUCTION DOCUMENTS.
CONSTRUCTION DOCUMENTS SHALL BE OF SUFFICIENT CLARITY TO INDICATE THE LOCATION, NATURE AND SCOPE OF THE PROPOSED GREEN BUILDING FEATURE AND SHOW THAT IT WILL CONFORM TO THE PROVISIONS OF THIS CODE, THE *CALIFORNIA BUILDING STANDARDS CODE* AND OTHER RELEVANT LAWS, ORDINANCES, RULES AND REGULATIONS AS DETERMINED BY THE ENFORCING AGENCY.

102.3 VERIFICATION.
DOCUMENTATION OF CONFORMANCE FOR APPLICABLE GREEN BUILDING MEASURES SHALL BE PROVIDED TO THE ENFORCING AGENCY. ALTERNATE METHODS OF DOCUMENTATION SHALL BE ACCEPTABLE WHEN THE ENFORCING AGENCY FINDS THAT THE PROPOSED ALTERNATE DOCUMENTATION IS SATISFACTORY TO DEMONSTRATE SUBSTANTIAL CONFORMANCE WITH THE INTENT OF THE PROPOSED GREEN BUILDING MEASURE.

CHAPTER 3 - GREEN BUILDING

SECTION 301 GENERAL

301.1 SCOPE.
BUILDINGS SHALL BE DESIGNED TO INCLUDE THE GREEN BUILDING MEASURES SPECIFIED AS MANDATORY IN THE APPLICATION CHECKLISTS CONTAINED IN THIS CODE. VOLUNTARY GREEN BUILDING MEASURES ARE ALSO INCLUDED IN THE APPLICATION CHECKLISTS AND MAY BE INCLUDED IN THE DESIGN AND CONSTRUCTION OF STRUCTURES COVERED BY THIS CODE, BUT ARE NOT REQUIRED UNLESS ADOPTED BY A CITY, COUNTY, OR CITY AND COUNTY AS SPECIFIED IN ***SECTION 101.7***.

301.3 NONRESIDENTIAL ADDITIONS AND ALTERATIONS
[BSC-CG] THE PROVISIONS OF INDIVIDUAL SECTIONS OF ***CHAPTER 5*** APPLY TO NEWLY CONSTRUCTED BUILDINGS, BUILDING ADDITIONS OF 1,000 SQUARE FEET OR GREATER, AND/OR BUILDING ALTERATIONS WITH A PERMIT VALUATION OF $200,000 OR ABOVE (FOR OCCUPANCIES WITHIN THE AUTHORITY OF CALIFORNIA BUILDING STANDARDS COMMISSION). CODE SECTIONS RELEVANT TO ADDITIONS AND ALTERATIONS SHALL ONLY APPLY TO THE PORTIONS OF THE BUILDING BEING ADDED OR ALTERED WITHIN THE SCOPE OF THE PERMITTED WORK.

A CODE SECTION WILL BE DESIGNATED BY A BANNER TO INDICATE WHERE THE CODE SECTION ONLY APPLIES TO NEWLY CONSTRUCTED BUILDINGS **[N]** OR TO ADDITIONS AND/OR ALTERATIONS **[A]**. WHEN THE CODE SECTION APPLIES TO BOTH, NO BANNER WILL BE USED.

301.3.1 NONRESIDENTIAL ADDITIONS AND ALTERATIONS THAT CAUSE UPDATES TO PLUMBING FIXTURES ONLY:

NOTE: ON AND AFTER JANUARY 1, 2014, CERTAIN COMMERCIAL REAL PROPERTY, AS DEFINED IN ***CIVIL CODE SECTION 1101.3***, SHALL HAVE ITS NONCOMPLIANT PLUMBING FIXTURES REPLACED WITH APPROPRIATE WATER-CONSERVING PLUMBING FIXTURES UNDER SPECIFIC CIRCUMSTANCES. SEE ***CIVIL CODE SECTION 1101.1 ET SEQ***. FOR DEFINITIONS, TYPES OF COMMERCIAL REAL PROPERTY AFFECTED, EFFECTIVE DATES, CIRCUMSTANCES NECESSITATING REPLACEMENT OF NONCOMPLIANT PLUMBING FIXTURES, AND DUTIES AND RESPONSIBILITIES FOR ENSURING COMPLIANCE.

301.3.2 WASTE DIVERSION

THE REQUIREMENTS OF ***SECTION 5.408*** SHALL BE REQUIRED FOR ADDITIONS AND ALTERATIONS WHENEVER A PERMIT IS REQUIRED FOR WORK.

301.4 PUBLIC SCHOOLS AND COMMUNITY COLLEGES (SEE GBSC)

301.5 HEALTH FACILITIES (SEE GBSC)

SECTION 302 MIXED OCCUPANCY BUILDINGS

302.1 MIXED OCCUPANCY BUILDINGS.
IN MIXED OCCUPANCY BUILDINGS, EACH PORTION OF A BUILDING SHALL COMPLY WITH THE SPECIFIC GREEN BUILDING MEASURES APPLICABLE TO EACH SPECIFIC OCCUPANCY.

SECTION 303 PHASED PROJECTS

303.1 PHASED PROJECTS.
FOR SHELL BUILDINGS AND OTHERS CONSTRUCTED FOR FUTURE TENANT IMPROVEMENTS, ONLY THOSE CODE MEASURES RELEVANT TO THE BUILDING COMPONENTS AND SYSTEMS CONSIDERED TO BE NEW CONSTRUCTION (OR NEWLY CONSTRUCTED) SHALL APPLY.

303.1.1 INITIAL TENANT IMPROVEMENTS
THE PROVISIONS OF THIS CODE SHALL APPLY ONNLY TO THE INITIAL TENANT IMPROVEMENTS TO A PROJECT. SUBSEQUENT TENANT IMPROVEMENTS SHALL COMPLY WITH THE SCOPING PROVISIONS IN ***SECTION 301.3*** NON-RESIDENTIAL ADDITIONS AND ALTERATIONS.

CHAPTER 5 - NONRESIDENTIAL MANDATORY MEASURES

DIVISION 5.1 PLANNING AND DESIGN

5.106 SITE DEVELOPMENT

5.106.1 STORMWATER POLLUTION FOR PROJECTS THAT DISTURB LESS THAN ONE ACRE OF LAND
NEWLY CONSTRUCTED PROJECTS AND ADDITIONS WHICH DISTURB LESS THAN ONE ACRE OF LAND AND ARE NOT PART OF A LARGER COMMON PLAN OF DEVELOPMENT OR SALE SHALL PREVENT THE POLLUTION OF STORMWATER RUNOFF FROM THE CONSTRUCTION ACTIVITIES THROUGH ONE OR MORE OF THE FOLLOWING MEASURES:

5.106.1.1 LOCAL ORDINANCE
COMPLY WITH A LAWFULLY ENACTED STORMWATER MANAGEMENT AND/OR EROSION CONTROL ORDINANCE.

5.106.1.2 BEST MANAGEMENT PRACTICES (BMP'S)
PREVENT THE LOSS OF SOIL THROUGH WIND OR WATER EROSION BY IMPLEMENTING AN EFFECTIVE COMBINATION OF EROSION AND SEDIMENT CONTROL AND GOOD HOUSEKEEPING BMP'S.

1. SOIL LOSS BMP'S THAT SHOULD BE CONSIDERED FOR IMPLEMENTATION AS APPROPRIATE FOR EACH PROJECT INCLUDE, BUT ARE NOT LIMITED TO, THE FOLLOWING:
   a. SCHEDULING CONSTRUCTION ACTIVITY DURING DRY WEATHER, WHEN POSSIBLE.
   b. PRESERVATION OF NATURAL FEATURES, VEGETATION, SOIL AND BUFFERS AROUND SURFACE WATERS.
   c. DRAINAGE SWALES OR LINED DITCHES TO CONTROL STORMWATER FLOW.
   d. MULCHING OR HYDROSEEDING TO STABILIZE DISTURBED SOILS.
   e. EROSION CONTROL TO PROTECT SLOPES.
   f. PROTECTION OF STORM DRAIN INLETS (GRAVEL BAGS OR CATCH BASIN INSERTS).
   g. PERIMETER SEDIMENT CONTROL (PERIMETER SILT FENCE, FIBER ROLLS).
   h. SEDIMENT TRAP OR SEDIMENT BASIN TO RETAIN SEDIMENT ON SITE.
   i. STABILIZED CONSTRUCTION EXITS.
   j. WIND EROSION CONTROL.
   k. OTHER SOIL LOSS BMP'S ACCEPTABLE TO THE ENFORCING AGENCY.

2. GOOD HOUSEKEEPING BMP'S TO MANAGE CONSTRUCTION EQUIPMENT, MATERIALS, NON-STORMWATER DISCHARGES, AND WASTES THAT SHOULD BE CONSIDERED FOR IMPLEMENTATION AS APPROPRIATE FOR EACH PROJECT INCLUDE, BUT ARE NOT LIMITED TO, THE FOLLOWING:
   a. DEWATERING ACTIVITIES.
   b. MATERIAL HANDLING AND WASTE MANAGEMENT.
   c. BUILDING MATERIALS STOCKPILE MANAGEMENT.
   d. MANAGEMENT OF WASHOUT AREAS (CONCRETE, PAINTS, STUCCO, ETC.).
   e. CONTROL OF VEHICLE/EQUIPMENT FUELING TO CONTRACTOR'S STAGING AREA.
   f. VEHICLE AND EQUIPMENT CLEANING PERFORMED OFF SITE.
   g. SPILL PREVENTION AND CONTROL.
   h. OTHER HOUSEKEEPING BMP'S ACCEPTABLE TO THE ENFORCING AGENCY.

5.106.2 STORMWATER POLLUTION PREVENTION FOR PROJECTS THAT DISTURB ONE OR MORE ACRES OF LAND
COMPLY WITH ALL LAWFULLY ENACTED STORMWATER DISCHARGE REGULATIONS FOR PROJECTS THAT (1) DISTURB ONE ACRE OR MORE OF LAND, OR (2) DISTURB LESS THAN ONE ACRE OF LAND BUT ARE PART OF A LARGER COMMON PLAN OF DEVELOPMENT OR SALE.

NOTE: PROJECTS THAT (1) DISTURB ONE ACRE OR MORE OF LAND, OR (2) DISTURB LESS THAN ONE ACRE OF LAND BUT ARE PART OF A LARGER COMMON PLAN OF DEVELOPMENT OR SALE MUST COMPLY WITH THE POSTCONSTRUCTION REQUIREMENTS DETAILED IN THE APPLICABLE NATIONAL POLLUTANT DISCHARGE ELIMINATION SYSTEM (NPDES) GENERAL PERMIT FOR STORMWATER DISCHARGES ASSOCIATED WITH CONSTRUCTION AND LAND DISTURBANCE ACTIVITIES ISSUED BY THE STATE WATER RESOURCES CONTROL BOARD OR THE LAHONTAN REGIONAL WATER QUALITY CONTROL BOARD (FOR PROJECTS IN THE LAKE TAHOE HYDROLOGIC UNIT).

THE NPDES PERMITS REQUIRE POSTCONSTRUCTION RUNOFF (POSTPROJECT HYDROLOGY) TO MATCH THE PRECONSTRUCTION RUNOFF (PRE-PROJECT HYDROLOGY) WITH THE INSTALLATION OF POSTCONSTRUCTION STORMWATER MANAGEMENT MEASURES. THE NPDES PERMITS EMPHASIZE RUNOFF REDUCTION THROUGH ON-SITE STORMWATER USE, INTERCEPTION, EVAPOTRANSPIRATION AND INFILTRATION THROUGH NONSTRUCTURAL CONTROLS, SUCH AS LOW IMPACT DEVELOPMENT (LID) PRACTICES AND CONSERVATION DESIGN MEASURES. STORMWATER VOLUME THAT CANNOT BE ADDRESSED USING NONSTRUCTURAL PRACTICES IS REQUIRED TO BE CAPTURED IN STRUCTURAL PRACTICES AND BE APPROVED BY THE ENFORCING AGENCY.

REFER TO THE CURRENT APPLICABLE PERMITS ON THE STATE WATER RESOURCES CONTROL BOARD WEBSITE AT: WWW.WATERBOARDS.CA.GOV/CONSTRUCTIONSTORMWATER. CONSIDERATION TO THE STORMWATER RUNOFF MANAGEMENT MEASURES SHOULD BE GIVEN DURING THE INITIAL DESIGN PROCESS FOR APPROPRIATE INTEGRATION INTO SITE DEVELOPMENT.

5.106.4 BICYCLE PARKING
FOR BUILDINGS WITHIN THE AUTHORITY OF CALIFORNIA BUILDING STANDARDS COMMISSION AS SPECIFIED IN ***SECTION 103***, COMPLY WITH ***SECTION 5.106.4.1***. FOR BUILDINGS WITHIN THE AUTHORITY OF THE DIVISION OF THE STATE ARCHITECT PURSUANT TO ***SECTION 105***, COMPLY WITH ***SECTION 5.106.4.2***.

5.106.4.1 BICYCLE PARKING [BSC-CG]
COMPLY WITH ***SECTIONS 5.106.4.1.1*** AND ***5.106.4.1.2;*** OR MEET THE APPLICABLE LOCAL ORDINANCE, WHICHEVER IS STRICTER.

5.106.4.1.1 SHORT-TERM BICYCLE PARKING
IF THE NEW PROJECT OR AN ADDITION OR ALTERATION IS ANTICIPATED TO GENERATE VISITOR TRAFFIC, PROVIDE PERMANENTLY ANCHORED BICYCLE RACKS WITHIN 200 FEET OF THE VISITORS' ENTRANCE, READILY VISIBLE TO PASSERS-BY, FOR 5 PERCENT OF NEW VISITOR MOTORIZED VEHICLE PARKING SPACES BEING ADDED, WITH A MINIMUM OF ONE TWO-BIKE CAPACITY RACK.

EXCEPTION: ADDITIONS OR ALTERATIONS WHICH ADD NINE OR LESS VISITOR VEHICULAR PARKING SPACES.

5.106.4.1.2 LONG-TERM BICYCLE PARKING
FOR NEW BUILDINGS WITH TENANT SPACES THAT HAVE 10 OR MORE TENANT-OCCUPANTS, PROVIDE SECURE BICYCLE PARKING FOR 5 PERCENT OF THE TENANT-OCCUPANT VEHICULAR PARKING SPACES WITH A MINIMUM OF ONE BICYCLE PARKING FACILITY.

5.106.4.1.3
FOR ADDITIONS OR ALTERATIONS THAT ADD 10 OR MORE TENANT-OCCUPANT VEHICULAR PARKING SPACES, PROVIDE SECURE BICYCLE PARKING FOR 5 PERCENT OF THE TENANT VEHICULAR PARKING SPACES BEING ADDED, WITH A MINIMUM OF ONE BICYCLE PARKING FACILITY.

5.106.4.1.4
FOR NEW SHELL BUILDINGS IN PHASED PROJECTS PROVIDE SECURE BICYCLE PARKING FOR 5 PERCENT OF THE ANTICIPATED TENANT-OCCUPANT VEHICULAR PARKING SPACES WITH A MINIMUM OF ONE BICYCLE PARKING FACILITY.

5.106.4.1.5
ACCEPTABLE BICYCLE PARKING FACILITY FOR ***SECTIONS 5.106.4.1.2***, ***5.106.4.1.3***, AND ***5.106.4.1.4*** SHALL BE CONVENIENT FROM THE STREET AND SHALL MEET ONE OF THE FOLLOWING:

1. COVERED, LOCKABLE ENCLOSURES WITH PERMANENTLY ANCHORED RACKS FOR BICYCLES;
2. LOCKABLE BICYCLE ROOMS WITH PERMANENTLY ANCHORED RACKS; OR
3. LOCKABLE, PERMANENTLY ANCHORED BICYCLE LOCKERS.

NOTE: ADDITIONAL INFORMATION ON RECOMMENDED BICYCLE ACCOMMODATIONS MAY BE OBTAINED FROM SACRAMENTO AREA BICYCLE ADVOCATES.

5.106.4.2 BICYCLE PARKING [DSA]
FOR PUBLIC SCHOOLS AND COMMUNITY COLLEGES, COMPLY WITH ***SECTIONS 5.106.4.2.1*** AND ***5.106.4.2.2.***

5.106.4.2.1 STUDENT BICYCLE PARKING
PROVIDE PERMANENTLY ANCHORED BICYCLE RACKS CONVENIENTLY ACCESSED WITH A MINIMUM OF FOUR TWO-BIKE CAPACITY RACKS PER NEW BUILDING.

5.106.4.2.2 STAFF BICYCLE PARKING
PROVIDE PERMANENT, SECURE BICYCLE PARKING CONVENIENTLY ACCESSED WITH A MINIMUM OF TWO STAFF BICYCLE PARKING SPACES PER NEW BUILDING. ACCEPTABLE BICYCLE PARKING FACILITIES SHALL BE CONVENIENT FROM THE STREET OR STAFF PARKING AREA AND SHALL MEET ONE OF THE FOLLOWING:

1. COVERED, LOCKABLE ENCLOSURES WITH PERMANENTLY ANCHORED RACKS FOR BICYCLES;
2. LOCKABLE BICYCLE ROOMS WITH PERMANENTLY ANCHORED RACKS; OR
3. LOCKABLE, PERMANENTLY ANCHORED BICYCLE LOCKERS.

5.106.5.3 ELECTRIC VEHICLE (EV) CHARGING [N]
CONSTRUCTION TO PROVIDE ELECTRIC VEHICLE INFRASTRUCTURE AND FACILITATE ELECTRIC VEHICLE CHARGING SHALL COMPLY WITH ***SECTION 5.106.5.3.1*** AND SHALL BE PROVIDED IN ACCORDANCE WITH REGULATIONS IN THE *CALIFORNIA BUILDING CODE* AND THE *CALIFORNIA ELECTRICAL CODE*.

EXCEPTIONS:

1. ON A CASE-BY-CASE BASIS WHERE THE LOCAL ENFORCING AGENCY HAS DETERMINED COMPLIANCE WITH THIS SECTION IS NOT FEASIBLE BASED UPON ONE OF THE FOLLOWING CONDITIONS:
   a. WHERE THERE IS NO LOCAL UTILITY POWER SUPPLY.
   b. WHERE THE LOCAL UTILITY IS UNABLE TO SUPPLY ADEQUATE POWER.
   c. WHERE THERE IS EVIDENCE SUITABLE TO THE LOCAL ENFORCEMENT AGENCY SUBSTANTIATING THAT ADDITIONAL LOCAL UTILITY INFRASTRUCTURE DESIGN REQUIREMENTS, DIRECTLY RELATED TO THE IMPLEMENTATION OF ***SECTION 5.106.5.3***, MAY ADVERSELY IMPACT THE CONSTRUCTION COST OF THE PROJECT.
2. PARKING SPACES ACCESSIBLE ONLY BY AUTOMATED MECHANICAL CAR PARKING SYSTEMS ARE NOT REQUIRED TO COMPLY WITH THIS CODE SECTION.

5.106.5.3.1 EV CAPABLE SPACES
EV CAPABLE SPACES SHALL BE PROVIDED IN ACCORDANCE WITH ***TABLE 5.106.5.3.1*** AND THE FOLLOWING REQUIREMENTS:

1. RACEWAYS COMPLYING WITH THE *CALIFORNIA ELECTRICAL CODE* AND NO LESS THAN 1-INCH DIAMETER SHALL BE PROVIDED AND SHALL ORIGINATE AT A SERVICE PANEL OR A SUBPANEL(S) SERVING THE AREA, AND SHALL TERMINATE IN CLOSE PROXIMITY TO THE PROPOSED LOCATION OF THE EV CAPABLE SPACE AND INTO A SUITABLE LISTED CABINET, BOX, ENCLOSURE OR EQUIVALENT. A COMMON RACEWAY MAY BE USED TO SERVE MULTIPLE EV CAPABLE SPACES.
2. A SERVICE PANEL OR SUBPANEL(S) SHALL BE PROVIDED WITH PANEL SPACE AND ELECTRICAL LOAD CAPACITY FOR A DEDICATED 208/240 VOLT, 40-AMPERE MINIMUM BRANCH CIRCUIT FOR EACH EV CAPABLE SPACE, WITH DELIVERY OF 30-AMPERE MINIMUM TO AN INSTALLED EVSE AT EACH EVCS.
3. THE ELECTRICAL SYSTEM AND ANY ON-SITE DISTRIBUTION TRANSFORMERS SHALL HAVE SUFFICIENT CAPACITY TO SUPPLY FULL RATED AMPERAGE AT EACH EV CAPABLE SPACE.
4. THE SERVICE PANEL OR SUBPANEL CIRCUIT DIRECTORY SHALL IDENTIFY THE RESERVED OVERCURRENT PROTECTIVE DEVICE SPACE(S) AS "EV CAPABLE". THE RACEWAY TERMINATION LOCATION SHALL BE PERMANENTLY AND VISIBLY MARKED AS "EV CAPABLE."

NOTE: A PARKING SPACE SERVED BY ELECTRIC VEHICLE SUPPLY EQUIPMENT OR DESIGNED AS A FUTURE EV CHARGING SPACE SHALL COUNT AS AT LEAST ONE STANDARD AUTOMOBILE PARKING SPACE ONLY FOR THE PURPOSE OF COMPLYING WITH ANY APPLICABLE MINIMUM PARKING SPACE REQUIREMENTS ESTABLISHED BY AN ENFORCEMENT AGENCY. SEE ***VEHICLE CODE SECTION 22511.2*** FOR FURTHER DETAILS.

TABLE 5.106.5.3.1

TOTAL NUMBER OF ACTUAL PARKING SPACES	NUMBER OF REQUIRED EV CAPABLE SPACES	NUMBER OF EVCS (EV CAPABLE SPACES PROVIDED WITH EVSE) [2]
0-9	0	0
10-25	4	0
26-50	8	2
51-75	13	3
76-100	17	4
101-150	25	6
151-200	35	6
201 AND OVER	20% OF TOTAL [1]	25% OF EV CAPABLE SPACES [1]

[1] CALCULATION FOR SPACES SHALL BE ROUNDED UP TO THE NEAREST WHOLE NUMBER.

[2] THE NUMBER OF REQUIRED EVCS (EV CAPABLE SPACES PROVIDED WITH EVSE) IN COLUMN 3 COUNT TOWARD THE TOTAL NUMBER OF REQUIRED EV CAPABLE SPACES SHOWN IN COLUMN 2.

5.106.5.3.2 ELECTRIC VEHICLE CHARGING STATIONS (EVCS)
EV CAPABLE SPACES SHALL BE PROVIDED WITH EVSE TO CREATE EVCS IN THE NUMBER INDICATED IN ***TABLE 5.106.5.3.1***. THE EVCS REQUIRED BY ***TABLE 5.106.5.3.1*** MAY BE PROVIDED WITH EVSE IN ANY COMBINATION OF LEVEL 2 AND DIRECT CURRENT FAST CHARGING (DCFC), EXCEPT THAT AT LEAST ONE LEVEL 2 EVSE SHALL BE PROVIDED.

ONE EV CHARGER WITH MULTIPLE CONNECTORS CAPABLE OF CHARGING MULTIPLE EVS SIMULTANEOUSLY SHALL BE PERMITTED IF THE ELECTRICAL LOAD CAPACITY REQUIRED BY ***SECTION 5.106.5.3.1*** FOR EACH EV CAPABLE SPACE IS ACCUMULATIVELY SUPPLIED TO THE EV CHARGER.

THE INSTALLATION OF EACH DCFC EVSE SHALL BE PERMITTED TO REDUCE THE MINIMUM NUMBER OF REQUIRED EV CAPABLE SPACES WITHOUT EVSE BY FIVE AND REDUCE PROPORTIONALLY THE REQUIRED ELECTRICAL LOAD CAPACITY TO THE SERVICE PANEL OR SUBPANEL.

5.106.5.3.3 USE OF AUTOMATIC LOAD MANAGEMENT SYSTEMS (ALMS)
ALMS SHALL BE PERMITTED FOR EVCS. WHEN ALMS IS INSTALLED, THE REQUIRED ELECTRICAL LOAD CAPACITY SPECIFIED IN ***SECTION 5.106.5.3.1*** FOR EACH EVCS MAY BE REDUCED WHEN SERVICED BY AN EVSE CONTROLLED BY AN ALMS. EACH EVSE CONTROLLED BY AN ALMS SHALL DELIVER A MINIMUM 30 AMPERES TO AN EV WHEN CHARGING ONE VEHICLE AND SHALL DELIVER A MINIMUM 3.3 KW WHILE SIMULTANEOUSLY CHARGING MULTIPLE EVS.

5.106.5.3.4 ACCESSIBLE EVCS
WHEN EVSE IS INSTALLED, ACCESSIBLE EVCS SHALL BE PROVIDED IN ACCORDANCE WITH THE *CALIFORNIA BUILDING CODE*, ***CHAPTER 11B***, ***SECTION 11B-228.3***.

NOTE: FOR EVCS SIGNS, REFER TO CALTRANS TRAFFIC OPERATIONS POLICY DIRECTIVE 13-01 (ZERO EMISSION VEHICLE SIGNS AND PAVEMENT MARKINGS) OR ITS SUCCESSOR(S).

5.106.8 LIGHT POLLUTION REDUCTION [N].
OUTDOOR LIGHTING SYSTEMS SHALL BE DESIGNED AND INSTALLED TO COMPLY WITH THE FOLLOWING:

1. THE MINIMUM REQUIREMENTS IN THE *CALIFORNIA ENERGY CODE* FOR LIGHTING ZONES 0-4 AS DEFINED IN ***CHAPTER 10, SECTION 10-114*** OF THE *CALIFORNIA ADMINISTRATIVE CODE*; AND
2. BACKLIGHT (B) RATINGS AS DEFINED IN IES TM-15-11 (SHOWN IN ***TABLE A-1 IN CHAPTER 8***);
3. UPLIGHT AND GLARE RATINGS AS DEFINED IN *CALIFORNIA ENERGY CODE* (SHOWN IN ***TABLES 130.2-A*** AND ***130.2-B*** IN ***CHAPTER 8***) AND
4. ALLOWABLE BUG RATINGS NOT EXCEEDING THOSE SHOWN IN ***TABLE 5.106.8 [N]***,

OR COMPLY WITH A LOCAL ORDINANCE LAWFULLY ENACTED PURSUANT TO ***SECTION 101.7***, WHICHEVER IS MORE STRINGENT.

EXCEPTIONS: [N]

1. LUMINAIRES THAT QUALIFY AS EXCEPTIONS IN ***SECTION 130.2(B) AND 140.7*** OF THE *CALIFORNIA ENERGY CODE*
2. EMERGENCY LIGHTING.
3. BUILDING FACADE MEETING THE REQUIREMENTS IN ***TABLE 140.7-B*** OF THE *CALIFORNIA ENERGY CODE, PART 6*.
4. CUSTOM LIGHTING FEATURES AS ALLOWED BY THE LOCAL ENFORCING AGENCY, AS PERMITTED BY ***SECTION 101.8*** ALTERNATE MATERIALS, DESIGNS AND METHODS OF CONSTRUCTION.
5. LUMINAIRES WITH LESS THAN 6,200 INITIAL LUMINAIRE LUMENS.

NOTES: [N]

1. SEE ALSO *CALIFORNIA BUILDING CODE*, ***CHAPTER 12, SECTION 1205.7*** FOR COLLEGE CAMPUS LIGHTING REQUIREMENTS FOR PARKING FACILITIES AND WALKWAYS.
2. REFER TO ***CHAPTER 8*** (COMPLIANCE FORMS, WORKSHEETS AND REFERENCE MATERIAL) FOR IES TM-15-11 ***TABLE A1***, *CALIFORNIA ENERGY CODE* ***TABLES 130.2-A*** AND ***130.2-B.***
3. REFER TO THE *CALIFORNIA ENERGY CODE* FOR REQUIREMENTS FOR ADDITIONS AND ALTERATIONS.

TABLE 5.106.8 [N] - MAXIMUM ALLOWABLE BACKLIGHT, UPLIGHT AND GLARE (BUG) RATING[1, 2]

ALLOWABLE RATING	LIGHTING ZONE LZ0	LIGHTING ZONE LZ1	LIGHTING ZONE LZ2	LIGHTING ZONE LZ3	LIGHTING ZONE LZ4
MAXIMUM ALLOWABLE BACKLIGHT RATING[3] (B)					
LUMINAIRE GREATER THAN 2 MOUNTING HEIGHTS (MH) FROM PROPERTY LINE	N/A	NO LIMIT	NO LIMIT	NO LIMIT	NO LIMIT
LUMINAIRE BACK HEMISPHERE IS 1-2 MH FROM PROPERTY LINE	N/A	B2	B3	B4	B4
LUMINAIRE BACK HEMISPHERE IS 0.5-1 MH FROM PROPERTY LINE	N/A	B1	B2	B3	B3
LUMINAIRE BACK HEMISPHERE IS LESS THAN 0.5 MH FROM PROPERTY LINE	N/A	B0	B0	B1	B2
MAXIMUM ALLOWABLE UPLIGHT RATING (U)					
FOR AREA LIGHTING[3]	N/A	U0	U0	U0	U0
FOR ALL OTHER OUTDOOR LIGHTING, INCLUDING DECORATIVE LUMINAIRES	N/A	U1	U2	U3	U4
MAXIMUM ALLOWABLE GLARE RATING (G)					
LUMINAIRE GREATER THAN 2 MOUNTING HEIGHTS (MH) FROM PROPERTY LINE	N/A	G1	G2	G3	G4
LUMINAIRE FRONT HEMISPHERE IS 1-2 MH FROM PROPERTY LINE	N/A	G0	G1	G1	G2
LUMINAIRE FRONT HEMISPHERE IS 0.5-1 MH FROM PROPERTY LINE	N/A	G0	G0	G1	G1
LUMINAIRE FRONT HEMISPHERE IS LESS THAN 0.5 MH FROM PROPERTY LINE	N/A	G0	G0	G0	G1

[1] IESNA LIGHTING ZONES 0 ARE NOT APPLICABLE; REFER TO LIGHTING ZONES AS DEFINED IN THE CALIFORNIA ENERGY CODE AND CHAPTER 10 OF THE CALIFORNIA ADMINISTRATIVE CODE.

[2] FOR PROPERTY LINES THAT ABUT PUBLIC WALKWAYS, BIKEWAYS, PLAZAS AND PARKING LOTS, THE PROPERTY LINE MAY BE CONSIDERED TO BE 5 FEET BEYOND THE ACTUAL PROPERTY LINE FOR PURPOSE OF DETERMINING COMPLIANCE WITH THIS SECTION. FOR PROPERTY LINES THAT ABUT PUBLIC ROADWAYS AND PUBLIC TRANSIT CORRIDORS, THE PROPERTY LINE MAY BE CONSIDERED TO BE THE CENTERLINE OF THE PUBLIC ROADWAY OR PUBLIC TRANSIT CORRIDOR FOR THE PURPOSE OF DETERMINING COMPLIANCE WITH THIS SECTION.

[3] GENERAL LIGHTING LUMINAIRES IN AREAS SUCH AS OUTDOOR PARKING, SALES OR STORAGE LOTS SHALL MEET THESE REDUCED RATINGS. DECORATIVE LUMINAIRES LOCATED IN THESE AREAS SHALL MEET U-VALUE LIMITS FOR "ALL OTHER OUTDOOR LIGHTING."

5.106.8.1 FACING - BACKLIGHT
LUMINAIRES WITHIN 2MH OF A PROPERTY LINE SHALL BE ORIENTED SO THAT THE NEAREST PROPERTY LINE IS BEHIND THE FIXTURE, AND SHALL COMPLY WITH THE BACKLIGHT RATING SPECIFIED IN TABLE 5.106.8 BASED ON THE LIGHTING ZONE AND DISTANCE TO THE NEAREST POINT OF THAT PROPERTY LINE.

EXCEPTION: CORNERS. IF TWO PROPERTY LINES (OR TWO SEGMENTS OF THE SAME PROPERTY LINE) HAVE EQUIDISTANT POINTS TO THE LUMINAIRE, THEN THE LUMINAIRE MAY BE ORIENTED SO THAT THE INTERSECTION OF THE TWO LINES (THE CORNER) IS DIRECTLY BEHIND THE LUMINAIRE. THE LUMINAIRE SHALL STILL USE THE DISTANCE TO THE NEAREST POINT(S) ON THE PROPERTY LINES TO DETERMINE THE REQUIRED BACKLIGHT RATING.

5.106.8.2 FACING - GLARE
FOR LUMINAIRES COVERED BY 5.106.8.1, IF A PROPERTY LINE ALSO EXISTS WITHIN OR EXTENDS INTO THE FRONT HEMISPHERE WITHIN 2MH OF THE LUMINAIRE THEN THE LUMINAIRE SHALL COMPLY WITH THE MORE STRINGENT GLARE RATING SPECIFIED IN TABLE 5.106.8 BASED ON THE LIGHTING ZONE AND DISTANCE TO THE NEAREST POINT ON THE NEAREST PROPERTY LINE WITHIN THE FRONT HEMISPHERE.

5.106.10 GRADING AND PAVING
CONSTRUCTION PLANS SHALL INDICATE HOW SITE GRADING OR A DRAINAGE SYSTEM WILL MANAGE ALL SURFACE WATER FLOWS TO KEEP WATER FROM ENTERING BUILDINGS. EXAMPLES OF METHODS TO MANAGE SURFACE WATER INCLUDE, BUT ARE NOT LIMITED TO, THE FOLLOWING:

1. SWALES.
2. WATER COLLECTION AND DISPOSAL SYSTEMS.
3. FRENCH DRAINS.
4. WATER RETENTION GARDENS.
5. OTHER WATER MEASURES WHICH KEEP SURFACE WATER AWAY FROM BUILDINGS AND AID IN GROUNDWATER RECHARGE.

EXCEPTION: ADDITIONS AND ALTERATIONS NOT ALTERING THE DRAINAGE PATH.

5.106.12 SHADE TREES
[DSA-SS] SHADE TREES SHALL BE PLANTED TO COMPLY WITH ***SECTIONS 5.106.12.1***, ***5.106.12.2***, AND ***5.106.12.3***. PERCENTAGES SHOWN SHALL BE MEASURED AT NOON ON THE SUMMER SOLSTICE. LANDSCAPE IRRIGATION NECESSARY TO ESTABLISH AND MAINTAIN TREE HEALTH SHALL COMPLY WITH ***SECTION 5.304.6***.

5.106.12.1 SURFACE PARKING AREAS
SHADE TREE PLANTINGS, MINIMUM #10 CONTAINER SIZE OR EQUAL, SHALL BE INSTALLED TO PROVIDE SHADE OVER 50 PERCENT OF THE PARKING AREA WITHIN 15 YEARS.

EXCEPTIONS: THE SURFACE PARKING AREA COVERED BY SOLAR PHOTOVOLTAIC SHADE STRUCTURES, OR SHADE STRUCTURES, WITH ROOFING MATERIALS THAT COMPLY WITH ***TABLE A5.106.11.2.2*** IN APPENDIX A5, SHALL BE PERMITTED IN WHOLE OR IN PART IN LIEU OF SHADE TREE PLANTINGS.

5.106.12.2 LANDSCAPE AREAS
SHADE TRESS PLANTINGS, MINIMUM #10 CONTAINER SIZE OR EQUAL SHALL BE INSTALLED TO PROVIDE SHADE OF 20% OF THE LANDSCAPE AREA WITHIN 15 YEARS.

EXCEPTIONS: PLAYFIELDS FOR ORGANIZED SPORT ACTIVITY ARE NOT INCLUDED IN THE TOTAL AREA CALCULATION.

5.106.12.3. HARDSCAPE AREAS.
SHADE TREE PLANTINGS, MINIMUM #10 CONTAINER SIZE OR EQUAL SHALL BE INSTALLED TO PROVIDE SHADE OVER 20% OF THE HARDSCAPE AREA WITHIN 15 YEARS.

EXCEPTIONS: WALKS, HARDSCAPE AREAS COVERED BY SOLAR PHOTOVOLTAIC SHADE STRUCTURES, AND HARDSCAPE AREAS COVERED BY SHADE STRUCTURES WITH ROOFING MATERIALS THAT COMPLY WITH ***TABLE A5.106.11.2.2*** IN APPENDIX A5, SHALL BE PERMITTED IN WHOLE OR IN PART IN LIEU OF SHADE TREE PLANTINGS. DESIGNATED AND MARKED PLAY AREAS OF ORGANIZED SPORT ACTIVITY ARE NOT INCLUDED IN THE TOTAL AREA CALCULATION..

DIVISION 5.2 ENERGY EFFICIENCY

5.201 GENERAL

5.201.1 SCOPE. CALIFORNIA ENERGY CODE
FOR THE PURPOSES OF MANDATORY ENERGY EFFICIENCY STANDARDS IN THIS CODE, THE CALIFORNIA ENERGY COMMISSION WILL CONTINUE TO ADOPT MANDATORY BUILDING STANDARDS.

DIVISION 5.3 WATER EFFICIENCY AND CONSERVATION

5.301 GENERAL

5.301.1 SCOPE
THE PROVISIONS OF THIS CHAPTER SHALL ESTABLISH THE MEANS OF CONSERVING WATER USED INDOORS, OUTDOORS AND IN WASTEWATER CONVEYANCE.

5.303 INDOOR WATER USE

5.303.1 METERS
SEPARATE SUBMETERS OR METERING DEVICES SHALL BE INSTALLED FOR THE USES DESCRIBED IN ***SECTIONS 5.303.1.1*** AND ***5.303.1.2***.

5.303.1.1 NEW BUILDINGS OR ADDITIONS IN EXCESS OF 50,000 SQUARE FEET
SEPARATE SUBMETERS SHALL BE INSTALLED AS FOLLOWS:

1. FOR EACH INDIVIDUAL LEASED, RENTED, OR OTHER TENANT SPACE WITHIN THE BUILDING PROJECTED TO CONSUME MORE THAN 100 GAL/DAY (380 L/DAY), INCLUDING, BUT NOT LIMITED TO, SPACES USED FOR LAUNDRY OR CLEANERS, RESTAURANT OR FOOD SERVICE, MEDICAL OR DENTAL OFFICE, LABORATORY, OR BEAUTY SALON OR BARBER SHOP.
2. WHERE SEPARATE SUBMETERS FOR INDIVIDUAL BUILDING TENANTS ARE UNFEASIBLE, FOR WATER SUPPLIED TO THE FOLLOWING SUBSYSTEMS:
   a. MAKEUP WATER FOR COOLING TOWERS WHERE FLOW THROUGH IS GREATER THAN 500 GPM (30 L/S).
   b. MAKEUP WATER FOR EVAPORATIVE COOLERS GREATER THAN 6 GPM (0.04 L/S).
   c. STEAM AND HOT-WATER BOILERS WITH ENERGY INPUT MORE THAN 500,000 BTU/H (147 KW).

rrm design group
rrmdesign.com | (805) 543-1794
3765 SOUTH HIGUERA STREET, SUITE 102
SAN LUIS OBISPO, CA 93401

THE INCLUDED DRAWINGS, SPECIFICATIONS, IDEAS, DESIGNS AND ARRANGEMENTS REPRESENTED THEREBY ARE AND SHALL REMAIN THE PROPERTY OF RRM DESIGN GROUP AND NO PART THEREOF SHALL BE COPIED, DISCLOSED TO OTHERS OR USED IN CONNECTION WITH ANY WORK OR PROJECT OTHER THAN THE SPECIFIED PROJECT FOR WHICH THEY HAVE BEEN PREPARED AND DEVELOPED WITHOUT THE WRITTEN CONSENT OF RRM DESIGN GROUP. VISUAL CONTACT WITH THESE DRAWINGS OR SPECIFICATIONS SHALL CONSTITUTE CONCLUSIVE EVIDENCE OF ACCEPTANCE OF THESE RESTRICTIONS. SUBMITTAL OF THESE DOCUMENTS FOR PUBLIC AGENCY REVIEW SHALL NOT BE CONSIDERED A WAIVER OF RRM DESIGN GROUP'S RIGHTS.
RRM DESIGN GROUP COPYRIGHT 2022
RRM IS A CALIFORNIA CORPORATION

LICENSED ARCHITECT
THADDEUS SCOTT LUPTON
C39678
10-31-25
RENEWAL DATE
STATE OF CALIFORNIA

CONSULTANT

AGENCY

FOURTH ST COMMUNITY CENTER AND PARK
HENDERSON AVE., PORTERVILLE, CA 93257

CAL GREEN REQUIREMENTS

NO.	REVISION	DATE
△		
△		
△		
△		
△		
△		

PLAN CHECK REVISION 2

PROJECT MANAGER
TSL

DRAWN BY
MC, NA, PM

CHECKED BY
DD, KF

DATE
2024.09.17

PROJECT NUMBER
2883-01-RC22

SHEET
GA203

9/20/2024 11:04:06 AM
Autodesk Docs://2883-01_Porterville Fourth St Community Center/2883-01-RC22_Porterville_v22.rvt

2022 CALIFORNIA GREEN BUILDING STANDARDS CODE

NONRESIDENTIAL MANDATORY MEASURES, SHEET 2 (JANUARY 2023)

5.303.1.2 EXCESS CONSUMPTION
A SEPARATE SUBMETER OR METERING DEVICE SHALL BE PROVIDED FOR ANY TENANT WITHIN A NEW BUILDING OR WITHIN AN ADDITION THAT IS PROJECTED TO CONSUME MORE THAN 1,000 GAL/DAY.

5.303.3 WATER CONSERVING PLUMBING FIXTURES AND FITTINGS
PLUMBING FIXTURES (WATER CLOSETS AND URINALS) AND FITTINGS (FAUCETS AND SHOWERHEADS) SHALL COMPLY WITH THE FOLLOWING:

5.303.3.1 WATER CLOSETS
THE EFFECTIVE FLUSH VOLUME OF ALL WATER CLOSETS SHALL NOT EXCEED 1.28 GALLONS PER FLUSH. TANK-TYPE WATER CLOSETS SHALL BE CERTIFIED TO THE PERFORMANCE CRITERIA OF THE U.S. EPA WATERSENSE SPECIFICATION FOR TANK-TYPE TOILETS.

NOTE: THE EFFECTIVE FLUSH VOLUME OF DUAL FLUSH TOILETS IS DEFINED AS THE COMPOSITE, AVERAGE FLUSH VOLUME OF TWO REDUCED FLUSHES AND ONE FULL FLUSH.

5.303.3.2 URINALS

5.303.3.2.1 WALL-MOUNTED URINALS
THE EFFECTIVE FLUSH VOLUME OF WALL-MOUNTED URINALS SHALL NOT EXCEED 0.125 GALLONS PER FLUSH.

5.303.3.2.2 FLOOR-MOUNTED URINALS
THE EFFECTIVE FLUSH VOLUME OF FLOOR-MOUNTED OR OTHER URINALS SHALL NOT EXCEED 0.5 GALLONS PER FLUSH.

5.303.3.3 SHOWERHEADS.

5.303.3.3.1 SINGLE SHOWERHEAD
SHOWERHEADS SHALL HAVE A MAXIMUM FLOW RATE OF NOT MORE THAN 1.8 GALLONS PER MINUTE AT 80 PSI. SHOWERHEADS SHALL BE CERTIFIED TO THE PERFORMANCE CRITERIA OF THE U.S. EPA WATERSENSE SPECIFICATION FOR SHOWERHEADS.

5.303.3.3.2 MULTIPLE SHOWERHEADS SERVING ONE SHOWER
WHEN A SHOWER IS SERVED BY MORE THAN ONE SHOWERHEAD, THE COMBINED FLOW RATE OF ALL SHOWERHEADS AND/OR OTHER SHOWER OUTLETS CONTROLLED BY A SINGLE VALVE SHALL NOT EXCEED 1.8 GALLONS PER MINUTE AT 80 PSI, OR THE SHOWER SHALL BE DESIGNED TO ALLOW ONLY ONE SHOWER OUTLET TO BE IN OPERATION AT A TIME.

NOTE: A HAND-HELD SHOWER SHALL BE CONSIDERED A SHOWERHEAD.

5.303.3.4 FAUCETS AND FOUNTAINS

5.303.3.4.1 NONRESIDENTIAL LAVATORY FAUCETS
LAVATORY FAUCETS SHALL HAVE A MAXIMUM FLOW RATE OF NOT MORE THAN 0.5 GALLONS PER MINUTE AT 60 PSI.

5.303.3.4.2 KITCHEN FAUCETS
KITCHEN FAUCETS SHALL HAVE A MAXIMUM FLOW RATE OF NOT MORE THAN 1.8 GALLONS PER MINUTE AT 60 PSI. KITCHEN FAUCETS MAY TEMPORARILY INCREASE THE FLOW ABOVE THE MAXIMUM RATE, BUT NOT TO EXCEED 2.2 GALLONS PER MINUTE AT 60 PSI, AND MUST DEFAULT TO A MAXIMUM FLOW RATE OF 1.8 GALLONS PER MINUTE AT 60 PSI.

5.303.3.4.3 WASH FOUNTAINS
WASH FOUNTAINS SHALL HAVE A MAXIMUM FLOW RATE OF NOT MORE THAN 1.8 GALLONS PER MINUTE/20 [RIM SPACE (INCHES) AT 60 PSI].

5.303.3.4.4 METERING FAUCETS
METERING FAUCETS SHALL NOT DELIVER MORE THAN 0.20 GALLONS PER CYCLE.

5.303.3.4.5 METERING FAUCETS FOR WASH FOUNTAINS
METERING FAUCETS FOR WASH FOUNTAINS SHALL HAVE A MAXIMUM FLOW RATE OF NOT MORE THAN 0.20 GALLONS PER CYCLE/20 [RIM SPACE (INCHES) AT 60 PSI].

NOTE: WHERE COMPLYING FAUCETS ARE UNAVAILABLE, AERATORS OR OTHER MEANS MAY BE USED TO ACHIEVE REDUCTION.

5.303.3.4.6 PRE-RINSE SPRAY VALVE
WHEN INSTALLED, SHALL MEET THE REQUIREMENTS IN THE CALIFORNIA CODE OF REGULATIONS, TITLE 20 (APPLIANCE EFFICIENCY REGULATIONS), SECTION 1605.1(H)(4) TABLE H-2, SECTION 1605.3(H)(4)(A), AND SECTION 1607(D)(7), AND SHALL BE EQUIPPED WITH AN INTEGRAL AUTOMATIC SHUTOFF.

5.303.4 COMMERCIAL KITCHEN EQUIPMENT

5.303.4.1 FOOD WASTE DISPOSERS
DISPOSERS SHALL EITHER MODULATE THE USE OF WATER TO NO MORE THAN 1 GPM WHEN THE DISPOSER IS NOT IN USE (NOT ACTIVELY GRINDING FOOD WASTE/NO-LOAD) OR SHALL AUTOMATICALLY SHUT OFF AFTER NO MORE THAN 10 MINUTES OF INACTIVITY. DISPOSERS SHALL USE NO MORE THAN 8 GPM OF WATER.

NOTE: THIS CODE SECTION DOES NOT AFFECT LOCAL JURISDICTION AUTHORITY TO PROHIBIT OR REQUIRE DISPOSER INSTALLATION.

5.303.5 AREAS OF ADDITION OR ALTERATION
FOR THOSE OCCUPANCIES WITHIN THE AUTHORITY OF THE CALIFORNIA BUILDING STANDARDS COMMISSION AS SPECIFIED IN ***SECTION 103***, THE PROVISIONS OF ***SECTIONS 5.303.3*** AND ***5.303.4*** SHALL APPLY TO NEW FIXTURES IN ADDITIONS OR AREAS OF ALTERATION TO THE BUILDING.

5.303.6 STANDARDS FOR PLUMBING FIXTURES AND FITTINGS
PLUMBING FIXTURES AND FITTINGS SHALL BE INSTALLED IN ACCORDANCE WITH THE *CALIFORNIA PLUMBING CODE*, AND SHALL MEET THE APPLICABLE STANDARDS REFERENCED IN ***TABLE 1701.1*** OF THE *CALIFORNIA PLUMBING CODE* AND IN ***CHAPTER 6*** OF THIS CODE.

5.304 OUTDOOR WATER USE

5.304.1 OUTDOOR POTABLE WATER USE IN LANDSCAPE AREAS
NONRESIDENTIAL DEVELOPMENTS SHALL COMPLY WITH A LOCAL WATER EFFICIENT LANDSCAPE ORDINANCE OR THE CURRENT CALIFORNIA DEPARTMENT OF WATER RESOURCES' MODEL WATER EFFICIENT LANDSCAPE ORDINANCE (MWELO), WHICHEVER IS MORE STRINGENT.
NOTES:
1. THE MODEL WATER EFFICIENT LANDSCAPE ORDINANCE (MWELO) IS LOCATED IN THE *CALIFORNIA CODE OF REGULATIONS*, TITLE 23, CHAPTER 2. 7, DIVISION 2.
2. MWELO AND SUPPORTING DOCUMENTS, INCLUDING A WATER BUDGET CALCULATOR, ARE AVAILABLE AT: https://www.water.ca.gov/.

5.304.6 OUTDOOR POTABLE WATER USE IN LANDSCAPE AREAS
FOR PUBLIC SCHOOLS AND COMMUNITY COLLEGES, LANDSCAPE PROJECTS AS DESCRIBED IN ***SECTIONS 5.304.6.1*** AND ***5.304.6.2*** SHALL COMPLY WITH THE CALIFORNIA DEPARTMENT OF WATER RESOURCES MODEL WATER EFFICIENT LANDSCAPE ORDINANCE (MWELO) COMMENCING WITH ***SECTION 490*** OF CHAPTER 2.7, DIVISION 2, TITLE 23, *CALIFORNIA CODE OF REGULATIONS*, EXCEPT THAT THE EVAPOTRANSPIRATION ADJUSTMENT FACTOR (ETAF) SHALL BE 0.65 WITH AN ADDITIONAL WATER ALLOWANCE FOR SPECIAL LANDSCAPE AREAS (SLA) OF 0.35.

EXCEPTION: ANY PROJECT WITH AN AGGREGATE LANDSCAPE AREA OF 2,500 SQUARE FEET OR LESS MAY COMPLY WITH THE PRESCRIPTIVE MEASURES CONTAINED IN APPENDIX D OF THE MWELO.

5.304.6.1 NEWLY CONSTRUCTED LANDSCAPES
NEW CONSTRUCTION PROJECTS WITH AN AGGREGATE LANDSCAPE AREA EQUAL TO OR GREATER THAN 500 SQUARE FEET.

5.304.6.2 REHABILITATED LANDSCAPES
REHABILITATED LANDSCAPE PROJECTS WITH AN AGGREGATE LANDSCAPE AREA EQUAL TO OR GREATER THAN 1,200 SQUARE FEET.

DIVISION 5.4 MATERIAL CONSERVATION AND RESOURCE EFFICIENCY

5.401 GENERAL

5.401.1 SCOPE
THE PROVISIONS OF THIS CHAPTER SHALL OUTLINE MEANS OF ACHIEVING MATERIAL CONSERVATION AND RESOURCE EFFICIENCY THROUGH PROTECTION OF BUILDINGS FROM EXTERIOR MOISTURE, CONSTRUCTION WASTE DIVERSION, EMPLOYMENT OF TECHNIQUES TO REDUCE POLLUTION THROUGH RECYCLING OF MATERIALS, AND BUILDING COMMISSIONING OR TESTING AND ADJUSTING.

5.407 WATER RESISTANCE AND MOISTURE MANAGEMENT

5.407.1 WEATHER PROTECTION
PROVIDE A WEATHER-RESISTANT EXTERIOR WALL AND FOUNDATION ENVELOPE AS REQUIRED BY *CALIFORNIA BUILDING CODE* ***SECTION 1402.2*** (WEATHER PROTECTION), MANUFACTURER'S INSTALLATION INSTRUCTIONS OR LOCAL ORDINANCE, WHICHEVER IS MORE STRINGENT.

5.407.2 MOISTURE CONTROL
EMPLOY MOISTURE CONTROL MEASURES BY THE FOLLOWING METHODS.

5.407.2.1 SPRINKLERS
DESIGN AND MAINTAIN LANDSCAPE IRRIGATION SYSTEMS TO PREVENT SPRAY ON STRUCTURES.

5.407.2.2 ENTRIES AND OPENINGS
DESIGN EXTERIOR ENTRIES AND/OR OPENINGS SUBJECT TO FOOT TRAFFIC OR WIND-DRIVEN RAIN TO PREVENT WATER INTRUSION INTO BUILDINGS AS FOLLOWS:

5.407.2.2.1 EXTERIOR DOOR PROTECTION
PRIMARY EXTERIOR ENTRIES SHALL BE COVERED TO PREVENT WATER INTRUSION BY USING NONABSORBENT FLOOR AND WALL FINISHES WITHIN AT LEAST 2 FEET AROUND AND PERPENDICULAR TO SUCH OPENINGS PLUS AT LEAST ONE OF THE FOLLOWING:

1. AN INSTALLED AWNING AT LEAST 4 FEET IN DEPTH.
2. THE DOOR IS PROTECTED BY A ROOF OVERHANG AT LEAST 4 FEET IN DEPTH.
3. THE DOOR IS RECESSED AT LEAST 4 FEET.
4. OTHER METHODS WHICH PROVIDE EQUIVALENT PROTECTION.

5.407.2.2.2 FLASHING
INSTALL FLASHINGS INTEGRATED WITH A DRAINAGE PLANE.

SECTION 5.408 CONSTRUCTION WASTE REDUCTION, DISPOSAL AND RECYCLING

5.408.1 CONSTRUCTION WASTE MANAGEMENT
RECYCLE AND/OR SALVAGE FOR REUSE A MINIMUM OF 65 PERCENT OF THE NONHAZARDOUS CONSTRUCTION AND DEMOLITION WASTE IN ACCORDANCE WITH ***SECTION 5.408.1.1***, ***5.408.1.2*** OR ***5.408.1.3***; OR MEET A LOCAL CONSTRUCTION AND DEMOLITION WASTE MANAGEMENT ORDINANCE, WHICHEVER IS MORE STRINGENT.

5.408.1.1 CONSTRUCTION WASTE MANAGEMENT PLAN
WHERE A LOCAL JURISDICTION DOES NOT HAVE A CONSTRUCTION AND DEMOLITION WASTE MANAGEMENT ORDINANCE THAT IS MORE STRINGENT, SUBMIT A CONSTRUCTION WASTE MANAGEMENT PLAN THAT
1. IDENTIFIES THE CONSTRUCTION AND DEMOLITION WASTE MATERIALS TO BE DIVERTED FROM DISPOSAL BY EFFICIENT USAGE, RECYCLING, REUSE ON THE PROJECT OR SALVAGE FOR FUTURE USE OR SALE.
2. DETERMINES IF CONSTRUCTION AND DEMOLITION WASTE MATERIALS WILL BE SORTED ON-SITE (SOURCE-SEPARATED) OR BULK MIXED (SINGLE STREAM).
3. IDENTIFIES DIVERSION FACILITIES WHERE CONSTRUCTION AND DEMOLITION WASTE MATERIAL COLLECTED WILL BE TAKEN.
4. SPECIFIES THAT THE AMOUNT OF CONSTRUCTION AND DEMOLITION WASTE MATERIALS DIVERTED SHALL BE CALCULATED BY WEIGHT OR VOLUME, BUT NOT BY BOTH.}

5.408.1.2 WASTE MANAGEMENT COMPANY
UTILIZE A WASTE MANAGEMENT COMPANY THAT CAN PROVIDE VERIFIABLE DOCUMENTATION THAT THE PERCENTAGE OF CONSTRUCTION AND DEMOLITION WASTE MATERIAL DIVERTED FROM THE LANDFILL COMPLIES WITH THIS SECTION.

NOTE: THE OWNER OR CONTRACTOR SHALL MAKE THE DETERMINATION IF THE CONSTRUCTION AND DEMOLITION WASTE MATERIAL WILL BE DIVERTED BY A WASTE MANAGEMENT COMPANY.

EXCEPTIONS TO *SECTIONS 5.408.1.1* AND *5.408.1.2*:

1. EXCAVATED SOIL AND LAND-CLEARING DEBRIS.
2. ALTERNATE WASTE REDUCTION METHODS DEVELOPED BY WORKING WITH LOCAL AGENCIES IF DIVERSION OR RECYCLE FACILITIES CAPABLE OF COMPLIANCE WITH THIS ITEM DO NOT EXIST.
3. DEMOLITION WASTE MEETING LOCAL ORDINANCE OR CALCULATED IN CONSIDERATION OF LOCAL RECYCLING FACILITIES AND MARKETS.

5.408.1.3 WASTE STREAM REDUCTION ALTERNATIVE
THE COMBINED WEIGHT OF NEW CONSTRUCTION DISPOSAL THAT DOES NOT EXCEED TWO POUNDS PER SQUARE FOOT OF BUILDING AREA MAY BE DEEMED TO MEET THE 65 PERCENT MINIMUM REQUIREMENT AS APPROVED BY THE ENFORCING AGENCY.

5.408.1.4 DOCUMENTATION
DOCUMENTATION SHALL BE PROVIDED TO THE ENFORCING AGENCY WHICH DEMONSTRATES COMPLIANCE WITH ***SECTIONS 5.408.1.1*** THROUGH ***5.408.1.3***. THE WASTE MANAGEMENT PLAN SHALL BE UPDATED AS NECESSARY AND SHALL BE ACCESSIBLE DURING CONSTRUCTION FOR EXAMINATION BY THE ENFORCING AGENCY.

NOTES:
1. SAMPLE FORMS FOUND IN "*A GUIDE TO THE CALIFORNIA GREEN BUILDING STANDARDS CODE (NONRESIDENTIAL)*" LOCATED AT https://www.dgs.ca.gov/BSC/Resources/Page-Content/Building-Standards-CommissionResources-List-Folder/CALGreen MAY BE USED TO ASSIST IN DOCUMENTING COMPLIANCE WITH THE WASTE MANAGEMENT PLAN.
2. MIXED CONSTRUCTION AND DEMOLITION DEBRIS (C&D) PROCESSORS CAN BE LOCATED AT THE CALIFORNIA DEPARTMENT OF RESOURCES RECYCLING AND RECOVERY (CALRECYCLE).

5.408.2 UNIVERSAL WASTE.
[A] ADDITIONS AND ALTERATIONS TO A BUILDING OR TENANT SPACE THAT MEET THE SCOPING PROVISIONS IN ***SECTION 301.3*** FOR NONRESIDENTIAL ADDITIONS AND ALTERATIONS, SHALL REQUIRE VERIFICATION THAT UNIVERSAL WASTE ITEMS SUCH AS FLUORESCENT LAMPS AND BALLAST AND MERCURY CONTAINING THERMOSTATS AS WELL AS OTHER CALIFORNIA PROHIBITED UNIVERSAL WASTE MATERIALS ARE DISPOSED OF PROPERLY AND ARE DIVERTED FROM LANDFILLS. A LIST OF PROHIBITED UNIVERSAL WASTE MATERIALS SHALL BE INCLUDED IN THE CONSTRUCTION DOCUMENTS.

NOTE: REFER TO THE UNIVERSAL WASTE RULE LINK AT: https://dtsc.ca.gov/universalwaste/

5.408.3 EXCAVATED SOIL AND LAND CLEARING DEBRIS
100 PERCENT OF TREES, STUMPS, ROCKS AND ASSOCIATED VEGETATION AND SOILS RESULTING PRIMARILY FROM LAND CLEARING SHALL BE REUSED OR RECYCLED. FOR A PHASED PROJECT, SUCH MATERIAL MAY BE STOCKPILED ON SITE UNTIL THE STORAGE SITE IS DEVELOPED.

EXCEPTION: REUSE, EITHER ON-OR OFF-SITE, OF VEGETATION OR SOIL CONTAMINATED BY DISEASE OR PEST INFESTATION.

NOTES:
1. IF CONTAMINATION BY DISEASE OR PEST INFESTATION IS SUSPECTED, CONTACT THE COUNTY AGRICULTURAL COMMISSIONER AND FOLLOW ITS DIRECTION FOR RECYCLING OR DISPOSAL OF THE MATERIAL. (www.cdfa.ca.gov/exec/county/county_contacts.html)
2. FOR A MAP OF KNOWN PEST AND/OR DISEASE QUARANTINE ZONES, CONSULT WITH THE CALIFORNIA DEPARTMENT OF FOOD AND AGRICULTURE. (www.cdfa.ca.gov)

5.410 BUILDING MAINTENANCE AND OPERATIONS

5.410.1 RECYCLING BY OCCUPANTS
PROVIDE READILY ACCESSIBLE AREAS THAT SERVE THE ENTIRE BUILDING AND ARE IDENTIFIED FOR THE DEPOSITING, STORAGE AND COLLECTION OF NON-HAZARDOUS MATERIALS FOR RECYCLING, INCLUDING (AT A MINIMUM) PAPER, CORRUGATED CARDBOARD, GLASS, PLASTICS, ORGANIC WASTE, AND METALS OR MEET A LAWFULLY ENACTED LOCAL RECYCLING ORDINANCE, IF MORE RESTRICTIVE.

EXCEPTION: RURAL JURISDICTIONS THAT MEET AND APPLY FOR THE EXEMPTION IN PUBLIC RESOURCES CODE 42649.82 (A)(2)(A) ET SEQ. SHALL ALSO BE EXEMPT FROM THE ORGANIC WASTE PORTION OF THIS SECTION.

5.410.1.1 ADDITIONS
ALL ADDITIONS CONDUCTED WITHIN A 12-MONTH PERIOD UNDER SINGLE OR MULTIPLE PERMITS, RESULTING IN AN INCREASE OF 30 PERCENT OR MORE IN FLOOR AREA, SHALL PROVIDE RECYCLING AREAS ON SITE.

EXCEPTION:ADDITIONS WITHIN A TENANT SPACE RESULTING IN LESS THAN A 30-PERCENT INCREASE IN THE TENANT SPACE FLOOR AREA.

5.410.1.2 SAMPLE ORDINANCE
SPACE ALLOCATION FOR RECYCLING AREAS SHALL COMPLY WITH CHAPTER 18, PART 3, DIVISION 30 OF THE *PUBLIC RESOURCES CODE.* CHAPTER 18 IS KNOWN AS THE CALIFORNIA SOLID WASTE REUSE AND RECYCLING ACCESS ACT OF 1991 (ACT).

NOTE: A SAMPLE ORDINANCE FOR USE BY LOCAL AGENCIES MAY BE FOUND IN APPENDIX A OF THE DOCUMENT AT THE CALRECYCLE'S WEBSITE

5.410.2 COMMISSIONING. [N] NEW BUILDINGS 10,000 SQ. FT. AND OVER
FOR NEW BUILDINGS 10,000 SQUARE FEET AND OVER, BUILDING COMMISSIONING SHALL BE INCLUDED IN THE DESIGN AND CONSTRUCTION PROCESSES OF THE BUILDING PROJECT TO VERIFY THAT THE BUILDING SYSTEMS AND COMPONENTS MEET THE OWNER'S OR OWNER REPRESENTATIVE'S PROJECT REQUIREMENTS. COMMISSIONING SHALL BE PERFORMED IN ACCORDANCE WITH THIS SECTION BY TRAINED PERSONNEL WITH EXPERIENCE ON PROJECTS OF COMPARABLE SIZE AND COMPLEXITY. FOR I-OCCUPANCIES THAT ARE NOT REGULATED BY OSHPD OR FOR I-OCCUPANCIES AND L-OCCUPANCIES THAT ARE NOT REGULATED BY THE *CALIFORNIA ENERGY CODE* ***SECTION 100.0 SCOPE***, ALL REQUIREMENTS IN ***SECTIONS 5.410.2*** THROUGH ***5.410.2.6*** SHALL APPLY.

NOTE: FOR ENERGY-RELATED SYSTEMS UNDER THE SCOPE (***SECTION 100***) OF THE *CALIFORNIA ENERGY CODE*, INCLUDING HEATING, VENTILATION, AIR CONDITIONING (HVAC) SYSTEMS AND CONTROLS, INDOOR LIGHTING SYSTEMS AND CONTROLS, AS WELL AS WATER HEATING SYSTEMS AND CONTROLS, REFER TO *CALIFORNIA ENERGY CODE* ***SECTION 120.8*** FOR COMMISSIONING REQUIREMENTS.

COMMISSIONING REQUIREMENTS SHALL INCLUDE:

1. OWNER'S OR OWNER REPRESENTATIVE'S PROJECT REQUIREMENTS.
2. BASIS OF DESIGN.
3. COMMISSIONING MEASURES SHOWN IN THE CONSTRUCTION DOCUMENTS.
4. COMMISSIONING PLAN.
5. FUNCTIONAL PERFORMANCE TESTING.
6. DOCUMENTATION AND TRAINING.
7. COMMISSIONING REPORT.

EXCEPTIONS:

1. UNCONDITIONED WAREHOUSES OF ANY SIZE.
2. AREAS LESS THAN 10,000 SQUARE FEET USED FOR OFFICES OR OTHER CONDITIONED ACCESSORY SPACES WITHIN UNCONDITIONED WAREHOUSES.
3. TENANT IMPROVEMENTS LESS THAN 10,000 SQUARE FEET AS DESCRIBED IN ***SECTION 303.1.1.***
4. OPEN PARKING GARAGES OF ANY SIZE, OR OPEN PARKING GARAGE AREAS, OF ANY SIZE, WITHIN A STRUCTURE.

NOTE: FOR THE PURPOSES OF THIS SECTION, UNCONDITIONED SHALL MEAN A BUILDING, AREA, OR ROOM WHICH DOES NOT PROVIDE HEATING AND OR AIR CONDITIONING.

INFORMATIONAL NOTES:

1. IAS AC 476 IS AN ACCREDITATION CRITERIA FOR ORGANIZATIONS PROVIDING TRAINING AND/OR CERTIFICATION OF COMMISSIONING PERSONNEL. AC 476 IS AVAILABLE TO THE AUTHORITY HAVING JURISDICTION AS A REFERENCE FOR QUALIFICATIONS OF COMMISSIONING PERSONNEL. AC 476 DOES NOT CERTIFY INDIVIDUALS TO CONDUCT FUNCTIONAL PERFORMANCE TESTS OR TO ADJUST AND BALANCE SYSTEMS.
2. FUNCTIONAL PERFORMANCE TESTING FOR HEATING, VENTILATION, AIR CONDITIONING SYSTEMS AND LIGHTING CONTROLS MUST BE PERFORMED IN COMPLIANCE WITH THE *CALIFORNIA ENERGY CODE.*

5.410.2.1 OWNER'S OR OWNER REPRESENTATIVE'S PROJECT REQUIREMENTS (OPR)
[N] THE EXPECTATIONS AND REQUIREMENTS OF THE BUILDING APPROPRIATE TO ITS PHASE SHALL BE DOCUMENTED BEFORE THE DESIGN PHASE OF THE PROJECT BEGINS. THIS DOCUMENTATION SHALL INCLUDE THE FOLLOWING:
1. ENVIRONMENTAL AND SUSTAINABILITY GOALS.
2. BUILDING SUSTAINABLE GOALS.
3. INDOOR ENVIRONMENTAL QUALITY REQUIREMENTS.
4. PROJECT PROGRAM, INCLUDING FACILITY FUNCTIONS AND HOURS OF OPERATION, AND NEED FOR AFTER HOURS OPERATION.
5. EQUIPMENT AND SYSTEMS EXPECTATIONS.
6. BUILDING OCCUPANT AND OPERATION AND MAINTENANCE (O&M) PERSONNEL EXPECTATIONS.

5.410.2.2 BASIS OF DESIGN (BOD)
[N] A WRITTEN EXPLANATION OF HOW THE DESIGN OF THE BUILDING SYSTEMS MEETS THE OPR SHALL BE COMPLETED AT THE DESIGN PHASE OF THE BUILDING PROJECT. THE BASIS OF DESIGN DOCUMENT SHALL COVER THE FOLLOWING SYSTEMS:

1. RENEWABLE ENERGY SYSTEMS.
2. LANDSCAPE IRRIGATION SYSTEMS.
3. WATER REUSE SYSTEMS.

5.410.2.3 COMMISSIONING PLAN
[N] PRIOR TO PERMIT ISSUANCE A COMMISSIONING PLAN SHALL BE COMPLETED TO DOCUMENT HOW THE PROJECT WILL BE COMMISSIONED. THE COMMISSIONING PLAN SHALL INCLUDE THE FOLLOWING:

1. GENERAL PROJECT INFORMATION.
2. COMMISSIONING GOALS.
3. SYSTEMS TO BE COMMISSIONED. PLANS TO TEST SYSTEMS AND COMPONENTS SHALL INCLUDE:
   a. AN EXPLANATION OF THE ORIGINAL DESIGN INTENT.
   b. EQUIPMENT AND SYSTEMS TO BE TESTED, INCLUDING THE EXTENT OF TESTS.
   c. FUNCTIONS TO BE TESTED.
   d. CONDITIONS UNDER WHICH THE TEST SHALL BE PERFORMED.
   e. MEASURABLE CRITERIA FOR ACCEPTABLE PERFORMANCE.
4. COMMISSIONING TEAM INFORMATION.
5. COMMISSIONING PROCESS ACTIVITIES, SCHEDULES AND RESPONSIBILITIES. PLANS FOR THE COMPLETION OF COMMISSIONING SHALL BE INCLUDED.

5.410.2.4 FUNCTIONAL PERFORMANCE TESTING [N]
FUNCTIONAL PERFORMANCE TESTS SHALL DEMONSTRATE THE CORRECT INSTALLATION AND OPERATION OF EACH COMPONENT, SYSTEM AND SYSTEM- TO-SYSTEM INTERFACE IN ACCORDANCE WITH THE APPROVED PLANS AND SPECIFICATIONS. FUNCTIONAL PERFORMANCE TESTING REPORTS SHALL CONTAIN INFORMATION ADDRESSING EACH OF THE BUILDING COMPONENTS TESTED, THE TESTING METHODS UTILIZED, AND INCLUDE ANY READINGS AND ADJUSTMENTS MADE.

5.410.2.5 DOCUMENTATION AND TRAINING [N]
A SYSTEMS MANUAL AND SYSTEMS OPERATIONS TRAINING ARE REQUIRED, INCLUDING OCCUPATIONAL SAFETY AND HEALTH ACT (OSHA) REQUIREMENTS IN *CALIFORNIA CODE OF REGULATIONS* (CCR), TITLE 8, SECTION 5142, AND OTHER RELATED REGULATIONS.

5.410.2.5.1 SYSTEMS MANUAL [N]
DOCUMENTATION OF THE OPERATIONAL ASPECTS OF THE BUILDING SHALL BE COMPLETED WITHIN THE SYSTEMS MANUAL AND DELIVERED TO THE BUILDING OWNER OR REPRESENTATIVE. THE SYSTEMS MANUAL SHALL INCLUDE THE FOLLOWING:

1. SITE INFORMATION, INCLUDING FACILITY DESCRIPTION, HISTORY AND CURRENT REQUIREMENTS.
2. SITE CONTACT INFORMATION.
3. BASIC OPERATIONS AND MAINTENANCE, INCLUDING GENERAL SITE OPERATING PROCEDURES, BASIC TROUBLESHOOTING, RECOMMENDED MAINTENANCE REQUIREMENTS, SITE EVENTS LOG.
4. MAJOR SYSTEMS.
5. SITE EQUIPMENT INVENTORY AND MAINTENANCE NOTES.
6. A COPY OF VERIFICATIONS REQUIRED BY THE ENFORCING AGENCY OR THIS CODE.
7. OTHER RESOURCES AND DOCUMENTATION, IF APPLICABLE.

5.410.2.5.2 SYSTEMS OPERATIONS TRAINING [N]
A PROGRAM FOR TRAINING OF THE APPROPRIATE MAINTENANCE STAFF FOR EACH EQUIPMENT TYPE AND/OR SYSTEM SHALL BE DEVELOPED AND DOCUMENTED IN THE COMMISSIONING REPORT AND SHALL INCLUDE THE FOLLOWING:

1. SYSTEM/EQUIPMENT OVERVIEW (WHAT IT IS, WHAT IT DOES AND WITH WHAT OTHER SYSTEMS AND/OR EQUIPMENT IT INTERFACES).
2. REVIEW AND DEMONSTRATION OF SERVICING/PREVENTIVE MAINTENANCE.
3. REVIEW OF THE INFORMATION IN THE SYSTEMS MANUAL.
4. REVIEW OF THE RECORD DRAWINGS ON THE SYSTEM/ EQUIPMENT.

5.410.2.6 COMMISSIONING REPORT [N]
A REPORT OF COMMISSIONING PROCESS ACTIVITIES UNDERTAKEN THROUGH THE DESIGN AND CONSTRUCTION PHASES OF THE BUILDING PROJECT SHALL BE COMPLETED AND PROVIDED TO THE OWNER OR REPRESENTATIVE.

5.410.4 TESTING AND ADJUSTING. NEW BUILDINGS LESS THAN 10,000 SQUARE FEET
TESTING AND ADJUSTING OF SYSTEMS SHALL BE REQUIRED FOR NEW BUILDINGS LESS THAN 10,000 SQUARE FEET OR NEW SYSTEMS TO SERVE AN ADDITION OR ALTERATION SUBJECT TO ***SECTION 303.1***.

5.410.4.1 (RESERVED)

NOTE: FOR ENERGY-RELATED SYSTEMS UNDER THE SCOPE (SECTION 100) OF THE CALIFORNIA ENERGY CODE, INCLUDING HEATING, VENTILATION, AIR CONDITIONING (HVAC) SYSTEMS AND CONTROLS, INDOOR LIGHTING SYSTEM AND CONTROLS, AS WELL AS WATER HEATING SYSTEMS AND CONTROLS, REFER TO CALIFORNIA ENERGY CODE SECTION 120.8 FOR COMMISSIONING REQUIREMENTS AND SECTIONS 120.5, 120.6, 130.4 AND 140.9(B)3 FOR ADDITIONAL TESTING REQUIREMENTS OF SPECIFIC SYSTEMS.

5.410.4.2 SYSTEMS
DEVELOP A WRITTEN PLAN OF PROCEDURES FOR TESTING AND ADJUSTING SYSTEMS. SYSTEMS TO BE INCLUDED FOR TESTING AND ADJUSTING SHALL INCLUDE, AS APPLICABLE TO THE PROJECT:

1. RENEWABLE ENERGY SYSTEMS.
2. LANDSCAPE IRRIGATION SYSTEMS.
3. WATER REUSE SYSTEMS.

5.410.4.3 PROCEDURES
PERFORM TESTING AND ADJUSTING PROCEDURES IN ACCORDANCE WITH MANUFACTURER'S SPECIFICATIONS AND APPLICABLE STANDARDS ON EACH SYSTEM.

5.410.4.3.1 HVAC BALANCING
IN ADDITION TO TESTING AND ADJUSTING, BEFORE A NEW SPACE-CONDITIONING SYSTEM SERVING A BUILDING OR SPACE IS OPERATED FOR NORMAL USE, BALANCE THE SYSTEM IN ACCORDANCE WITH THE PROCEDURES DEFINED BY THE TESTING ADJUSTING AND BALANCING BUREAU NATIONAL STANDARDS; THE NATIONAL ENVIRONMENTAL BALANCING BUREAU PROCEDURAL STANDARDS; ASSOCIATED AIR BALANCE COUNCIL NATIONAL STANDARDS OR AS APPROVED BY THE ENFORCING AGENCY.

5.410.4.4 REPORTING
AFTER COMPLETION OF TESTING, ADJUSTING AND BALANCING, PROVIDE A FINAL REPORT OF TESTING SIGNED BY THE INDIVIDUAL RESPONSIBLE FOR PERFORMING THESE SERVICES.

5.410.4.5 OPERATION AND MAINTENANCE (O & M) MANUAL
PROVIDE THE BUILDING OWNER OR REPRESENTATIVE WITH DETAILED OPERATING AND MAINTENANCE INSTRUCTIONS AND COPIES OF GUARANTIES/WARRANTIES FOR EACH SYSTEM. O & M INSTRUCTIONS SHALL BE CONSISTENT WITH OSHA REQUIREMENTS IN CCR, TITLE 8, SECTION 5142, AND OTHER RELATED REGULATIONS.

5.410.4.5.1 INSPECTIONS AND REPORTS
INCLUDE A COPY OF ALL INSPECTION VERIFICATIONS AND REPORTS REQUIRED BY THE ENFORCING AGENCY.

DIVISION 5.5 ENVIRONMENTAL QUALITY

5.501 GENERAL

5.501.1 SCOPE
THE PROVISIONS OF THIS CHAPTER SHALL OUTLINE MEANS OF REDUCING THE QUANTITY OF AIR CONTAMINANTS THAT ARE ODOROUS, IRRITATING, AND/OR HARMFUL TO THE COMFORT AND WELL-BEING OF A BUILDING'S INSTALLERS, OCCUPANTS AND NEIGHBORS.

5.503 FIREPLACES

5.503.1 FIREPLACES
INSTALL ONLY A DIRECT-VENT SEALED-COMBUSTION GAS OR SEALED WOOD-BURNING FIREPLACE, OR A SEALED WOOD-STOVE OR PELLET STOVE, AND REFER TO RESIDENTIAL REQUIREMENTS IN THE *CALIFORNIA ENERGY CODE*, TITLE 24, PART 6, SUBCHAPTER 7, SECTION 150. WOODSTOVES, PELLET STOVES AND FIREPLACES SHALL COMPLY WITH APPLICABLE LOCAL ORDINANCES.

5.503.1.1 WOODSTOVES
WOODSTOVE AND PELLET STOVES SHALL COMPLY WITH U.S. EPA NEW SOURCE PERFORMANCE STANDARDS (NSPS) EMISSION LIMITS AS APPLICABLE, AND SHALL HAVE A PERMANENT LABEL INDICATING THEY ARE CERTIFIED TO MEET THE EMISSION LIMITS.

5.504 POLLUTANT CONTROL

5.504.1 TEMPORARY VENTILATION
THE PERMANENT HVAC SYSTEM SHALL ONLY BE USED DURING CONSTRUCTION IF NECESSARY TO CONDITION THE BUILDING OR AREAS OF ADDITION OR ALTERATION WITHIN THE REQUIRED TEMPERATURE RANGE FOR MATERIAL AND EQUIPMENT INSTALLATION. IF THE HVAC SYSTEM IS USED DURING CONSTRUCTION, USE RETURN AIR FILTERS WITH A MINIMUM EFFICIENCY REPORTING VALUE (MERV) OF 8, BASED ON ASHRAE 52.2-1999, OR AN AVERAGE EFFICIENCY OF 30 PERCENT BASED ON ASHRAE 52.1-1992. REPLACE ALL FILTERS IMMEDIATELY PRIOR TO OCCUPANCY, OR, IF THE BUILDING IS OCCUPIED DURING ALTERATION, AT THE CONCLUSION OF CONSTRUCTION.

5.504.3 COVERING OF DUCT OPENINGS AND PROTECTION OF MECHANICAL EQUIPMENT DURING CONSTRUCTION
AT THE TIME OF ROUGH INSTALLATION AND DURING STORAGE ON THE CONSTRUCTION SITE UNTIL FINAL STARTUP OF THE HEATING, COOLING AND VENTILATING EQUIPMENT, ALL DUCT AND OTHER RELATED AIR DISTRIBUTION COMPONENT OPENINGS SHALL BE COVERED WITH TAPE, PLASTIC, SHEETMETAL OR OTHER METHODS ACCEPTABLE TO THE ENFORCING AGENCY TO REDUCE THE AMOUNT OF DUST, WATER AND DEBRIS WHICH MAY ENTER THE SYSTEM.

5.504.4 FINISH MATERIAL POLLUTANT CONTROL
FINISH MATERIALS SHALL COMPLY WITH SECTIONS ***5.504.4.1*** THROUGH ***5.504.4.6***.

5.504.4.1 ADHESIVES, SEALANTS AND CAULKS
ADHESIVES, SEALANTS, AND CAULKS USED ON THE PROJECT SHALL MEET THE REQUIREMENTS OF THE FOLLOWING STANDARDS:

1. ADHESIVES, ADHESIVE BONDING PRIMERS, ADHESIVE PRIMERS, SEALANTS, SEALANT PRIMERS AND CAULKS SHALL COMPLY WITH LOCAL OR REGIONAL AIR POLLUTION CONTROL OR AIR QUALITY MANAGEMENT DISTRICT RULES WHERE APPLICABLE, OR SCAQMD RULE 1168 VOC LIMITS, AS SHOWN IN ***TABLES 5.504.4.1*** AND ***5.504.4.2***. SUCH PRODUCTS ALSO SHALL COMPLY WITH THE RULE 1168 PROHIBITION ON THE USE OF CERTAIN TOXIC COMPOUNDS (CHLOROFORM, ETHYLENE DICHLORIDE, METHYLENE CHLORIDE, PERCHLOROETHYLENE AND TRICHLOROETHYLENE), EXCEPT FOR AEROSOL PRODUCTS AS SPECIFIED IN SUBSECTION 2, BELOW.
2. AEROSOL ADHESIVES, AND SMALLER UNIT SIZES OF ADHESIVES, AND SEALANT OR CAULKING COMPOUNDS (IN UNITS OF PRODUCT, LESS PACKAGING, WHICH DO NOT WEIGH MORE THAN ONE POUND AND DO NOT CONSIST OF MORE THAN 16 FLUID OUNCES) SHALL COMPLY WITH STATEWIDE VOC STANDARDS AND OTHER REQUIREMENTS, INCLUDING PROHIBITIONS ON USE OF CERTAIN TOXIC COMPOUNDS, OF *CALIFORNIA CODE OF REGULATIONS*, TITLE 17, COMMENCING WITH SECTION 94507.

TABLE 5.504.4.1 - ADHESIVE VOC LIMIT[1,2]
(LESS WATER AND LESS EXEMPT COMPOUNDS IN GRAMS PER LITER)

ARCHITECTURAL APPLICATIONS	CURRENT VOC LIMIT
INDOOR CARPET ADHESIVES	50
CARPET PAD ADHESIVES	50
OUTDOOR CARPET ADHESIVES	150
WOOD FLOORING ADHESIVES	100
RUBBER FLOORING ADHESIVES	60
SUBFLOOR ADHESIVES	50
CERAMIC TILE ADHESIVES	65
VCT AND ASPHALT TILE ADHESIVES	50
DRYWALL AND PANEL ADHESIVES	50
COVE BASE ADHESIVES	50
MULTIPURPOSE CONSTRUCTION ADHESIVES	70
STRUCTURAL GLAZING ADHESIVES	100
SINGLE-PLY ROOF MEMBRANE ADHESIVES	250
OTHER ADHESIVES NOT SPECIFICALLY LISTED	50
SPECIALTY APPLICATIONS	
PVC WELDING	510
CPVC WELDING	490
ABS WELDING	325
PLASTIC CEMENT WELDING	250
ADHESIVE PRIMER FOR PLASTIC	550
CONTACT ADHESIVE	80
SPECIAL PURPOSE CONTACT ADHESIVE	250
STRUCTURAL WOOD MEMBER ADHESIVE	140
TOP AND TRIM ADHESIVES	250
SUBSTRATE SPECIFIC APPLICATIONS	
METAL TO METAL	30
PLASTIC FOAMS	50
POROUS MATERIAL (EXCEPT WOOD)	50
WOOD	30
FIBERGLASS	80

1. IF AN ADHESIVE IS USED TO BOND DISSIMILAR SUBSTRATES TOGETHER, THE ADHESIVE WITH THE HIGHEST VOC CONTENT SHALL BE ALLOWED.
2. FOR ADDITIONAL INFORMATION REGARDING METHODS TO MEASURE THE VOC CONTENT SPECIFIED IN THIS TABLE, SEE SOUTH COAST AIR QUALITY MANAGEMENT DISTRICT RULE 1168. HTTP://WWW.ARB.CA.GOV/DRDB/SC/CURHTML/R1168.PDF.

rrm design group
rrmdesign.com | (805) 543-1794
3765 SOUTH HIGUERA STREET, SUITE 102
SAN LUIS OBISPO, CA 93401

THE INCLUDED DRAWINGS, SPECIFICATIONS, IDEAS, DESIGNS AND ARRANGEMENTS REPRESENTED THEREBY ARE AND SHALL REMAIN THE PROPERTY OF RRM DESIGN GROUP AND NO PART THEREOF SHALL BE COPIED, DISCLOSED TO OTHERS OR USED IN CONNECTION WITH ANY WORK OR PROJECT OTHER THAN THE SPECIFIED PROJECT FOR WHICH THEY HAVE BEEN PREPARED AND DEVELOPED WITHOUT THE WRITTEN CONSENT OF RRM DESIGN GROUP. VISUAL CONTACT WITH THESE DRAWINGS OR SPECIFICATIONS SHALL CONSTITUTE CONCLUSIVE EVIDENCE OF ACCEPTANCE OF THESE RESTRICTIONS. SUBMITTAL OF THESE DOCUMENTS FOR PUBLIC AGENCY REVIEW SHALL NOT BE CONSIDERED A WAIVER OF RRM DESIGN GROUP'S RIGHTS.
RRM DESIGN GROUP COPYRIGHT 2022
RRM IS A CALIFORNIA CORPORATION

LICENSED ARCHITECT
THADDEUS SCOTT LUPTON
C 39678
10-31-25
RENEWAL DATE
STATE OF CALIFORNIA

CONSULTANT

AGENCY

FOURTH ST COMMUNITY CENTER AND PARK
HENDERSON AVE., PORTERVILLE, CA 93257

CAL GREEN REQUIREMENTS

NO.	REVISION	DATE
△		
△		
△		
△		
△		
△		

PLAN CHECK REVISION 2

PROJECT MANAGER: TSL
DRAWN BY: MC, NA, PM
CHECKED BY: DD, KF
DATE: 2024.09.17
PROJECT NUMBER: 2883-01-RC22
SHEET: GA204

2022 CALIFORNIA GREEN BUILDING STANDARDS CODE

NONRESIDENTIAL MANDATORY MEASURES, SHEET 3 (JANUARY 2023)

TABLE 5.504.4.2 - SEALANT VOC LIMIT
(LESS WATER AND LESS EXEMPT COMPOUNDS IN GRAMS PER LITER)

SEALANTS	CURRENT VOC LIMIT
ARCHITECTURAL	250
MARINE DECK	760
NONMEMBRANE ROOF	300
ROADWAY	250
SINGLE-PLY ROOF MEMBRANE	450
OTHER	420
SEALANT PRIMERS	
ARCHITECTURAL	
NONPOROUS	250
POROUS	775
MODIFIED BITUMINOUS	500
MARINE DECK	760
OTHER	750

NOTE: FOR ADDITIONAL INFORMATION REGARDING METHODS TO MEASURE THE VOC CONTENT SPECIFIED IN THESE TABLES, SEE SOUTH COAST AIR QUALITY MANAGEMENT DISTRICT RULE 1168.

5.504.4.3 PAINTS AND COATINGS
ARCHITECTURAL PAINTS AND COATINGS SHALL COMPLY WITH VOC LIMITS IN TABLE 1 OF THE ARB ARCHITECTURAL COATINGS SUGGESTED CONTROL MEASURE, AS SHOWN IN ***TABLE 5.504.4.3***, UNLESS MORE STRINGENT LOCAL LIMITS APPLY. THE VOC CONTENT LIMIT FOR COATINGS THAT DO NOT MEET THE DEFINITIONS FOR THE SPECIALTY COATINGS CATEGORIES LISTED IN ***TABLE 5.504.4.3*** SHALL BE DETERMINED BY CLASSIFYING THE COATING AS A FLAT, NONFLAT OR NONFLAT-HIGH GLOSS COATING, BASED ON ITS GLOSS, AS DEFINED IN SUBSECTIONS 4.21, 4.36 AND 4.37 OF THE 2007 CALIFORNIA AIR RESOURCES BOARD SUGGESTED CONTROL MEASURE, AND THE CORRESPONDING FLAT, NONFLAT OR NONFLAT-HIGH GLOSS VOC LIMIT IN ***TABLE 5.504.4.3*** SHALL APPLY.

TABLE 5.504.4.3 - VOC CONTENT LIMITS FOR ARCHITECTURAL COATINGS[2, 3]
(GRAMS OF VOC PER LITER OF COATING, LESS WATER AND LESS EXEMPT COMPOUNDS)

COATING CATEGORY	CURRENT VOC LIMIT
FLAT COATINGS	50
NONFLAT COATINGS	100
NONFLAT-HIGH GLOSS COATINGS	150
SPECIALTY COATINGS	
ALUMINUM ROOF COATINGS	400
BASEMENT SPECIALTY COATINGS	400
BITUMINOUS ROOF COATINGS	50
BITUMINOUS ROOF PRIMERS	350
BOND BREAKERS	350
CONCRETE CURING COMPOUNDS	350
CONCRETE/MASONRY SEALERS	100
DRIVEWAY SEALERS	50
DRY FOG COATINGS	150
FAUX FINISHING COATINGS	350
FIRE RESISTIVE COATINGS	350
FLOOR COATINGS	100
FORM-RELEASE COMPOUNDS	250
GRAPHIC ARTS COATINGS (SIGN PAINTS)	500
HIGH TEMPERATURE COATINGS	420
IDUSTRIAL MAINTENANCE COATINGS	250
LOW SOLIDS COATINGS[1]	120
MAGNESITE CEMENT COATINGS	450
MASTIC TEXTURE COATINGS	100
METALLIC PIGMENTED COATINGS	500
MULTICOLOR COATINGS	250
PRETREATMENT WASH PRIMERS	420
PRIMERS, SEALERS, AND UNDERCOATERS	100
REACTIVE PENETRATING SEALERS	350
RECYCLED COATINGS	250
ROOF COATINGS	50
RUST PREVENTATIVE COATINGS	250
SHELLACS	
CLEAR	730
OPAQUE	550
SPECIALTY PRIMERS, SEALERS AND UNDERCOATERS	100
STAINS	250
STONE CONSOLIDANTS	450
SWIMMING POOL COATINGS	340
TRAFFIC MARKING COATINGS	100
TUB AND TILE REFINISH COATINGS	420
WATERPROOFING MEMBRANES	250
WOOD COATINGS	275
WOOD PRESERVATIVES	350
ZINC-RICH PRIMERS	340

1. GRAMS OF VOC PER LITER OF COATING, INCLUDING WATER AND INCLUDING EXEMPT COMPOUNDS.
2. THE SPECIFIED LIMITS REMAIN IN EFFECT ENLESS REVISED LIMITS ARE LISTED IN SUBSEQUENT COLUMNS IN THE TABLE
3. VALUES IN THIS TABLE ARE DERIVED FROM THOSE SPECIFIED BY THE CALIFORNIA AIR RESOURCES BOARD, ARCHITECTURAL COATINGS SUGGESTED CONTROL MEASURE, FEBUARY 1, 2008. MORE INFORMATION IS AVAILABLE FROM THE AIR RESOURCES BOARD.

5.504.4.3.1 AEROSOL PAINTS AND COATINGS

AEROSOL PAINTS AND COATINGS SHALL MEET THE PWMIR LIMITS FOR ROC IN SECTION 94522(A)(3) AND OTHER REQUIREMENTS, INCLUDING PROHIBITIONS ON USE OF CERTAIN TOXIC COMPOUNDS AND OZONE DEPLETING SUBSTANCES, IN SECTIONS 94522(C)(2) AND (D)(2) OF *CALIFORNIA CODE OF REGULATIONS*, TITLE 17, COMMENCING WITH SECTION 94520; AND IN AREAS UNDER THE JURISDICTION OF THE BAY AREA AIR QUALITY MANAGEMENT DISTRICT ADDITIONALLY COMPLY WITH THE PERCENT VOC BY WEIGHT OF PRODUCT LIMITS OF REGULATION 8 RULE 49.

5.504.4.3.2 VERIFICATION
VERIFICATION OF COMPLIANCE WITH THIS SECTION SHALL BE PROVIDED AT THE REQUEST OF THE ENFORCING AGENCY. DOCUMENTATION MAY INCLUDE, BUT IS NOT LIMITED TO, THE FOLLOWING:

1. MANUFACTURER'S PRODUCT SPECIFICATION
2. FIELD VERIFICATION OF ON-SITE PRODUCT CONTAINERS

5.504.4.4 CARPET SYSTEMS
ALL CARPET INSTALLED IN THE BUILDING INTERIOR SHALL MEET THE REQUIREMENTS FOR THE CALIFORNIA DEPARTMENT OF PUBLIC HEALTH, "STANDARD METHOD FOR THE TESTING AND EVALUATION OF VOLATILE ORGANIC CHEMICAL EMISSIONS FROM INDOOR SOURCES USING ENVIRONMENTAL CHAMBERS," VERSION 1.2, JANUARY 2017 (EMISSION TESTING METHOD FOR CALIFORNIA SPECIFICATION 01350).
SEE CALIFORNIA DEPARTMENT OF PUBLIC HEALTH'S WEBSITE FOR CERTIFICATION PROGRAMS AND TESTING LABS.
https://www.cdph.ca.gov/Programs/CCDPHP/DEODC/EHLB/IAQ/Pages/VOC.aspx#material

5.504.4.4.1 CARPET CUSHION
ALL CARPET CUSHION INSTALLED IN THE BUILDING INTERIOR SHALL MEET THE REQUIREMENTS OF THE CALIFORNIA DEPARTMENT OF PUBLIC HEALTH, "STANDARD METHOD FOR THE TESTING AND EVALUATION OF VOLATILE ORGANIC CHEMICAL EMISSIONS FROM INDOOR SOURCES USING ENVIRONMENTAL CHAMBERS," VERSION 1.2, JANUARY 2017 (EMISSION TESTING METHOD FOR CALIFORNIA SPECIFICATION 01350).
SEE CALIFORNIA DEPARTMENT OF PUBLIC HEALTH'S WEBSITE FOR CERTIFICATION PROGRAMS AND TESTING LABS.
https://www.cdph.ca.gov/Programs/CCDPHP/DEODC/EHLB/IAQ/Pages/VOC.aspx#material

5.504.4.4.2 CARPET ADHESIVE
ALL CARPET ADHESIVE SHALL MEET THE REQUIREMENTS OF ***TABLE 5.504.4.1***.

5.504.4.5 COMPOSITE WOOD PRODUCTS
HARDWOOD PLYWOOD, PARTICLEBOARD AND MEDIUM DENSITY FIBERBOARD COMPOSITE WOOD PRODUCTS USED ON THE INTERIOR OR EXTERIOR OF THE BUILDING SHALL MEET THE REQUIREMENTS FOR FORMALDEHYDE AS SPECIFIED IN ARB'S AIR TOXIC CONTROL MEASURE (ATCM) FOR COMPOSITE WOOD (17 CCR 93120 ET SEQ.) THOSE MATERIALS NOT EXEMPTED UNDER THE ATCM MUST MEET THE SPECIFIED EMISSION LIMITS, AS SHOWN IN ***TABLE 5.504.4.5***.

5.504.4.5.3 DOCUMENTATION
VERIFICATION OF COMPLIANCE WITH THIS SECTION SHALL BE PROVIDED AS REQUESTED BY THE ENFORCING AGENCY. DOCUMENTATION SHALL INCLUDE AT LEAST ONE OF THE FOLLOWING:

1. PRODUCT CERTIFICATIONS AND SPECIFICATIONS.
2. CHAIN OF CUSTODY CERTIFICATIONS.
3. PRODUCT LABELED AND INVOICED AS MEETING THE COMPOSITE WOOD PRODUCTS REGULATION (SEE CCR, TITLE 17, SECTION 93120, *ET SEQ.*).
4. EXTERIOR GRADE PRODUCTS MARKED AS MEETING THE PS-1 OR PS-2 STANDARDS OF THE ENGINEERED WOOD ASSOCIATION, THE AUSTRALIAN AS/NZS 2269 OR EUROPEAN 636 3S STANDARDS.

OTHER METHODS ACCEPTABLE TO THE ENFORCING AGENCY.

TABLE 5.504.4.5 - FORMALDEHYDE LIMITS[1]
(MAXIMUM FORMALDEHYDE EMISSIONS IN PARTS PER MILLION)

PRODUCT	CURRENT LIMIT
HARDWOOD PLYWOOD VENEER CORE	0.05
HARDWOOD PLYWOOD COMPOSITE CORE	0.05
PARTICLEBOARD	0.09
MEDIUM DENSITY FIBERBOARD	0.11
THIN MEDIUM DENSITY FIBERBOARD[2]	0.13

1. VALUES IN THIS TABLE ARE DERIVED FROM THOSE SPECIFIED BY THE CALIFORNIA AIR RESOURCES BOARD, AIR TOXICS CONTROL MEASURE FOR COMPOSITE WOOD AS TESTED IN ACCORDANCE WITH ASTM E1333. FOR ADDITIONAL INFORMATION, SEE CALIFORNIA CODE OF REGULATIONS, TITLE 17, SECTIONS 93120 THROUGH 93120.12.
2. THIN MEDIUM DENSITY FIBERBOARD HAS A MAXIMUM THICKNESS OF 5/16 INCH (8MM).

5.504.4.6 RESILIENT FLOOR SYSTEMS
WHERE RESILIENT FLOORING IS INSTALLED, AT LEAST 80% OF FLOOR AREA RECEIVING RESILIENT FLOORING SHALL MEET THE REQUIREMENTS OF THE CALIFORNIA DEPARTMENT OF PUBLIC HEALTH, "STANDARD METHOD FOR THE TESTING AND EVALUATION OF VOLATILE ORGANIC CHEMICAL EMISSIONS FROM INDOOR SOURCES USING ENVIRONMENTAL CHAMBERS," VERSION 1.2, JANUARY 2017 (EMISSION TESTING METHOD FOR CALIFORNIA SPECIFICATION 01350).
SEE CALIFORNIA DEPARTMENT OF PUBLIC HEALTH'S WEBSITE FOR CERTIFICATION PROGRAMS AND TESTING LABS.
https://www.cdph.ca.gov/Programs/CCDPHP/DEODC/EHLB/IAQ/Pages/VOC.aspx#material

5.504.4.6.1 VERIFICATION OF COMPLIANCE
DOCUMENTATION SHALL BE PROVIDED VERIFYING THAT RESILIENT FLOORING MATERIALS MEET THE POLLUTANT EMISSION LIMITS.

5.504.5.3 FILTERS
IN MECHANICALLY VENTILATED BUILDINGS, PROVIDE REGULARLY OCCUPIED AREAS OF THE BUILDING WITH AIR FILTRATION MEDIA FOR OUTSIDE AND RETURN AIR THAT PROVIDES AT LEAST A MINIMUM EFFICIENCY REPORTING VALUE (MERV) OF 8. MERV 8 FILTERS SHALL BE INSTALLED PRIOR TO OCCUPANCY, AND RECOMMENDATIONS FOR MAINTENANCE WITH FILTERS OF THE SAME VALUE SHALL BE INCLUDED IN THE OPERATION AND MAINTENANCE MANUAL.

EXCEPTION: EXISTING MECHANICAL EQUIPMENT.

5.504.5.3.1 LABELING
INSTALLED FILTERS SHALL BE CLEARLY LABELED BY THE MANUFACTURER INDICATING THE MERV RATING.

5.504.7 ENVIRONMENTAL TOBACCO SMOKE (ETS) CONTROL
WHERE OUTDOOR AREAS ARE PROVIDED FOR SMOKING, PROHIBIT SMOKING WITHIN 25 FEET OF BUILDING ENTRIES, OUTDOOR AIR INTAKES AND OPERABLE WINDOWS AND WITHIN THE BUILDING AS ALREADY PROHIBITED BY OTHER LAWS OR REGULATIONS; OR AS ENFORCED BY ORDINANCES, REGULATIONS OR POLICIES OF ANY CITY, COUNTY, CITY AND COUNTY, CALIFORNIA COMMUNITY COLLEGE, CAMPUS OF THE CALIFORNIA STATE UNIVERSITY, OR CAMPUS OF THE UNIVERSITY OF CALIFORNIA, WHICHEVER ARE MORE STRINGENT. WHEN ORDINANCES, REGULATIONS OR POLICIES ARE NOT IN PLACE, POST SIGNAGE TO INFORM BUILDING OCCUPANTS OF THE PROHIBITIONS.

5.505 INDOOR MOISTURE CONTROL

5.505.1 INDOOR MOISTURE CONTROL
BUILDINGS SHALL MEET OR EXCEED THE PROVISIONS OF *CALIFORNIA BUILDING CODE*, CCR, TITLE 24, PART 2, SECTIONS 1202 (VENTILATION) AND CHAPTER 14 (EXTERIOR WALLS). FOR ADDITIONAL MEASURES, SEE ***SECTION 5.407.2*** OF THIS CODE.

5.506 INDOOR AIR QUALITY

5.506.1 OUTSIDE AIR DELIVERY
FOR MECHANICALLY OR NATURALLY VENTILATED SPACES IN BUILDINGS, MEET THE MINIMUM REQUIREMENTS OF ***SECTION 120.1*** (REQUIREMENTS FOR VENTILATION) OF THE *CALIFORNIA ENERGY CODE,* OR THE APPLICABLE LOCAL CODE, WHICHEVER IS MORE STRINGENT, AND DIVISION 1, CHAPTER 4 OF CCR, TITLE 8.

5.506.2 CARBON DIOXIDE (CO2) MONITORING
FOR BUILDINGS OR ADDITIONS EQUIPPED WITH DEMAND CONTROL VENTILATION, CO2 SENSORS AND VENTILATION CONTROLS SHALL BE SPECIFIED AND INSTALLED IN ACCORDANCE WITH THE REQUIREMENTS OF THE *CALIFORNIA ENERGY CODE,* SECTION 120(C)(4).

5.507 ENVIRONMENTAL COMFORT

5.507.4 ACOUSTICAL CONTROL
EMPLOY BUILDING ASSEMBLIES AND COMPONENTS WITH SOUND TRANSMISSION CLASS (STC) VALUES DETERMINED IN ACCORDANCE WITH ASTM E90 AND ASTM E413 OR OUTDOOR-INDOOR SOUND TRANSMISSION CLASS (OITC) DETERMINED IN ACCORDANCE WITH ASTM E1332, USING EITHER THE PRESCRIPTIVE OR PERFORMANCE METHOD IN ***SECTION 5.507.4.1*** OR ***5.507.4.2***.

EXCEPTION: BUILDINGS WITH FEW OR NO OCCUPANTS OR WHERE OCCUPANTS ARE NOT LIKELY TO BE AFFECTED BY EXTERIOR NOISE, AS DETERMINED BY THE ENFORCEMENT AUTHORITY, SUCH AS FACTORIES, STADIUMS, STORAGE, ENCLOSED PARKING STRUCTURES AND UTILITY BUILDINGS.

EXCEPTION: [DSA-SS] FOR PUBLIC SCHOOLS AND COMMUNITY COLLEGES, THE REQUIREMENTS OF THIS SECTION AND ALL SUBSECTIONS APPLY ONLY TO NEW CONSTRUCTION.

5.507.4.1 EXTERIOR NOISE TRANSMISSION, PRESCRIPTIVE METHOD
WALL AND ROOF-CEILING ASSEMBLIES EXPOSED TO THE NOISE SOURCE MAKING UP THE BUILDING OR ADDITION ENVELOPE OR ALTERED ENVELOPE SHALL MEET A COMPOSITE STC RATING OF AT LEAST 50 OR A COMPOSITE OITC RATING OF NO LESS THAN 40, WITH EXTERIOR WINDOWS OF A MINIMUM STC OF 40 OR OITC OF 30 IN THE FOLLOWING LOCATIONS:

1. WITHIN THE 65 CNEL NOISE CONTOUR OF AN AIRPORT.

   EXCEPTIONS:
   1. L_{DN} OR CNEL FOR MILITARY AIRPORTS SHALL BE DETERMINED BY THE FACILITY AIR INSTALLATION COMPATIBLE LAND USE ZONE (AICUZ) PLAN.
   2. L_{DN} OR CNEL FOR OTHER AIRPORTS AND HELIPORTS FOR WHICH A LAND USE PLAN HAS NOT BEEN DEVELOPED SHALL BE DETERMINED BY THE LOCAL GENERAL PLAN NOISE ELEMENT.
2. WITHIN THE 65 CNEL OR L_{DN} NOISE CONTOUR OF A FREEWAY OR EXPRESSWAY, RAILROAD, INDUSTRIAL SOURCE OR FIXED-GUIDEWAY SOURCE AS DETERMINED BY THE NOISE ELEMENT OF THE GENERAL PLAN.

5.507.4.1.1 NOISE EXPOSURE WHERE NOISE CONTOURS ARE NOT READILY AVAILABLE
BUILDINGS EXPOSED TO A NOISE LEVEL OF 65 DB L_{EQ}-1-HR DURING ANY HOUR OF OPERATION SHALL HAVE BUILDING, ADDITION OR ALTERATION EXTERIOR WALL AND ROOF-CEILING ASSEMBLIES EXPOSED TO THE NOISE SOURCE MEETING A COMPOSITE STC RATING OF AT LEAST 45 (OR OITC 35), WITH EXTERIOR WINDOWS OF A MINIMUM STC OF 40 (OR OITC 30).

5.507.4.2 PERFORMANCE METHOD
FOR BUILDINGS LOCATED AS DEFINED IN ***SECTION 5.507.4.1*** OR ***5.507.4.1.1***, WALL AND ROOF-CEILING ASSEMBLIES EXPOSED TO THE NOISE SOURCE MAKING UP THE BUILDING OR ADDITION ENVELOPE OR ALTERED ENVELOPE SHALL BE CONSTRUCTED TO PROVIDE AN INTERIOR NOISE ENVIRONMENT ATTRIBUTABLE TO EXTERIOR SOURCES THAT DOES NOT EXCEED AN HOURLY EQUIVALENT NOISE LEVEL (L_{EQ}-1HR) OF 50 DBA IN OCCUPIED AREAS DURING ANY HOUR OF OPERATION.

5.507.4.2.1 SITE FEATURES
EXTERIOR FEATURES SUCH AS SOUND WALLS OR EARTH BERMS MAY BE UTILIZED AS APPROPRIATE TO THE BUILDING, ADDITION OR ALTERATION PROJECT TO MITIGATE SOUND MIGRATION TO THE INTERIOR.

5.507.4.2.2 DOCUMENTATION OF COMPLIANCE
AN ACOUSTICAL ANALYSIS DOCUMENTING COMPLYING INTERIOR SOUND LEVELS SHALL BE PREPARED BY PERSONNEL APPROVED BY THE ARCHITECT OR ENGINEER OF RECORD.

5.507.4.3 INTERIOR SOUND TRANSMISSION
WALL AND FLOOR-CEILING ASSEMBLIES SEPARATING TENANT SPACES AND TENANT SPACES AND PUBLIC PLACES SHALL HAVE AN STC OF AT LEAST 40.

NOTE: EXAMPLES OF ASSEMBLIES AND THEIR VARIOUS STC RATINGS MAY BE FOUND AT THE CALIFORNIA OFFICE OF NOISE CONTROL: www.toolbase.org/PDF/CaseStudies/stc_icc_ratings.pdf.

5.508 OUTDOOR AIR QUALITY

5.508.1 OZONE DEPLETION AND GREENHOUSE GAS REDUCTIONS
INSTALLATIONS OF HVAC, REFRIGERATION AND FIRE SUPPRESSION EQUIPMENT SHALL COMPLY WITH ***SECTIONS 5.508.1.1*** AND ***5.508.1.2***.

5.508.1.1 CHLOROFLUOROCARBONS (CFCS)
INSTALL HVAC, REFRIGERATION AND FIRE SUPPRESSION EQUIPMENT THAT DO NOT CONTAIN CFCS.

5.508.1.2 HALONS
INSTALL HVAC, REFRIGERATION AND FIRE SUPPRESSION EQUIPMENT THAT DO NOT CONTAIN HALONS.

5.508.2 SUPERMARKET REFRIGERANT LEAK REDUCTION
NEW COMMERCIAL REFRIGERATION SYSTEMS SHALL COMPLY WITH THE PROVISIONS OF THIS SECTION WHEN INSTALLED IN RETAIL FOOD STORES 8,000 SQUARE FEET OR MORE CONDITIONED AREA, AND THAT UTILIZE EITHER REFRIGERATED DISPLAY CASES, OR WALK-IN COOLERS OR FREEZERS CONNECTED TO REMOTE COMPRESSOR UNITS OR CONDENSING UNITS. THE LEAK REDUCTION MEASURES APPLY TO REFRIGERATION SYSTEMS CONTAINING HIGH-GLOBAL-WARMING POTENTIAL (HIGH-GWP) REFRIGERANTS WITH A GWP OF 150 OR GREATER. NEW REFRIGERATION SYSTEMS INCLUDE BOTH NEW FACILITIES AND THE REPLACEMENT OF EXISTING REFRIGERATION SYSTEMS IN EXISTING FACILITIES.

EXCEPTION: REFRIGERATION SYSTEMS CONTAINING LOW-GLOBAL WARMING POTENTIAL (LOW-GWP) REFRIGERANT WITH A GWP VALUE LESS THAN 150 ARE NOT SUBJECT TO THIS SECTION. LOW-GWP REFRIGERANTS ARE NONOZONE-DEPLETING REFRIGERANTS THAT INCLUDE AMMONIA, CARBON DIOXIDE (CO_2), AND POTENTIALLY OTHER REFRIGERANTS.

5.508.2.1 REFRIGERANT PIPING
PIPING COMPLIANT WITH THE *CALIFORNIA MECHANICAL CODE* SHALL BE INSTALLED TO BE ACCESSIBLE FOR LEAK PROTECTION AND REPAIRS. PIPING RUNS USING THREADED PIPE, COPPER TUBING WITH AN OUTSIDE DIAMETER (OD) LESS THAN $^1/_4$ INCH, FLARED TUBING CONNECTIONS AND SHORT RADIUS ELBOWS SHALL NOT BE USED IN REFRIGERANT SYSTEMS EXCEPT AS NOTED BELOW.

5.508.2.1.1 THREADED PIPE
THREADED CONNECTIONS ARE PERMITTED AT THE COMPRESSOR RACK.

5.508.2.1.2 COPPER PIPE
COPPER TUBING WITH AN OD LESS THAN $^1/_4$ INCH MAY BE USED IN SYSTEMS WITH A REFRIGERANT CHARGE OF 5 POUNDS OR LESS.

5.508.2.1.2.1 ANCHORAGE
ONE-FOURTH-INCH OD TUBING SHALL BE SECURELY CLAMPED TO A RIGID BASE TO KEEP VIBRATION LEVELS BELOW 8 MILS.

5.508.2.1.3 FLARED TUBING CONNECTIONS
DOUBLE-FLARED TUBING CONNECTIONS MAY BE USED FOR PRESSURE CONTROLS, VALVE PILOT LINES AND OIL.

EXCEPTION: SINGLE-FLARED TUBING CONNECTIONS MAY BE USED WITH A MULTIRING SEAL COATED WITH INDUSTRIAL SEALANT SUITABLE FOR USE WITH REFRIGERANTS AND TIGHTENED IN ACCORDANCE WITH MANUFACTURER'S RECOMMENDATIONS.

5.508.2.1.4 ELBOWS
SHORT RADIUS ELBOWS ARE ONLY PERMITTED WHERE SPACE LIMITATIONS PROHIBIT USE OF LONG RADIUS ELBOWS.

5.508.2.2 VALVES
VALVES AND FITTINGS SHALL COMPLY WITH THE *CALIFORNIA MECHANICAL CODE* AND AS FOLLOWS.

5.508.2.2.1 PRESSURE RELIEF VALVES
FOR VESSELS CONTAINING HIGH-GWP REFRIGERANT, A RUPTURE DISC SHALL BE INSTALLED BETWEEN THE OUTLET OF THE VESSEL AND THE INLET OF THE PRESSURE RELIEF VALVE.

5.508.2.2.1.1 PRESSURE DETECTION
A PRESSURE GAUGE, PRESSURE TRANSDUCER OR OTHER DEVICE SHALL BE INSTALLED IN THE SPACE BETWEEN THE RUPTURE DISC AND THE RELIEF VALVE INLET TO INDICATE A DISC RUPTURE OR DISCHARGE OF THE RELIEF VALVE.

5.508.2.2.2 ACCESS VALVES
ONLY SCHRADER ACCESS VALVES WITH A BRASS OR STEEL BODY ARE PERMITTED FOR USE.

5.508.2.2.2.1 VALVE CAPS
FOR SYSTEMS WITH A REFRIGERANT CHARGE OF 5 POUNDS OR MORE, VALVE CAPS SHALL BE BRASS OR STEEL AND NOT PLASTIC.

5.508.2.2.2.2 SEAL CAPS
IF DESIGNED FOR IT, THE CAP SHALL HAVE A NEOPRENE O-RING IN PLACE.

5.508.2.2.2.2.1 CHAIN TETHERS
CHAIN TETHERS TO FIT OVER THE STEM ARE REQUIRED FOR VALVES DESIGNED TO HAVE SEAL CAPS.

EXCEPTION: VALVES WITH SEAL CAPS THAT ARE NOT REMOVED FROM THE VALVE DURING STEM OPERATION.

5.508.2.3 REFRIGERATED SERVICE CASES
REFRIGERATED SERVICE CASES HOLDING FOOD PRODUCTS CONTAINING VINEGAR AND SALT SHALL HAVE EVAPORATOR COILS OF CORROSION-RESISTANT MATERIAL, SUCH AS STAINLESS STEEL; OR BE COATED TO PREVENT CORROSION FROM THESE SUBSTANCES.

5.508.2.3.1 COIL COATING
CONSIDERATION SHALL BE GIVEN TO THE HEAT TRANSFER EFFICIENCY OF COIL COATING TO MAXIMIZE ENERGY EFFICIENCY.

5.508.2.4 REFRIGERANT RECEIVERS
REFRIGERANT RECEIVERS WITH CAPACITIES GREATER THAN 200 POUNDS SHALL BE FITTED WITH A DEVICE THAT INDICATES THE LEVEL OF REFRIGERANT IN THE RECEIVER.

5.508.2.5 PRESSURE TESTING
THE SYSTEM SHALL BE PRESSURE TESTED DURING INSTALLATION PRIOR TO EVACUATION AND CHARGING.

5.508.2.5.1 MINIMUM PRESSURE
THE SYSTEM SHALL BE CHARGED WITH REGULATED DRY NITROGEN AND APPROPRIATE TRACER GAS TO BRING SYSTEM PRESSURE UP TO 300 PSIG MINIMUM.

5.508.2.5.2 LEAKS
CHECK THE SYSTEM FOR LEAKS, REPAIR ANY LEAKS, AND RETEST FOR PRESSURE USING THE SAME GAUGE.

5.508.2.5.3 ALLOWABLE PRESSURE CHANGE
THE SYSTEM SHALL STAND, UNALTERED, FOR 24 HOURS WITH NO MORE THAN A +/- ONE POUND PRESSURE CHANGE FROM 300 PSIG, MEASURED WITH THE SAME GAUGE.

5.508.2.6 EVACUATION
THE SYSTEM SHALL BE EVACUATED AFTER PRESSURE TESTING AND PRIOR TO CHARGING.

5.508.2.6.1 FIRST VACUUM
PULL A SYSTEM VACUUM DOWN TO AT LEAST 1000 MICRONS (+/- 50 MICRONS), AND HOLD FOR 30 MINUTES.

5.508.2.6.2 SECOND VACUUM
PULL A SECOND SYSTEM VACUUM TO A MINIMUM OF 500 MICRONS AND HOLD FOR 30 MINUTES.

5.508.2.6.3 THIRD VACUUM
PULL A THIRD VACUUM DOWN TO A MINIMUM OF 300 MICRONS, AND HOLD FOR 24 HOURS WITH A MAXIMUM DRIFT OF 100 MICRONS OVER A 24-HOUR PERIOD.

CHAPTER 7 - INSTALLER & SPECIAL INSPECTOR QUALIFICATIONS

702 QUALIFICATIONS

702.1 INSTALLER TRAINING
HVAC SYSTEM INSTALLERS SHALL BE TRAINED AND CERTIFIED IN THE PROPER INSTALLATION OF HVAC SYSTEMS INCLUDING DUCTS AND EQUIPMENT BY A NATIONALLY OR REGIONALLY RECOGNIZED TRAINING OR CERTIFICATION PROGRAM. UNCERTIFIED PERSONS MAY PERFORM HVAC INSTALLATIONS WHEN UNDER THE DIRECT SUPERVISION AND RESPONSIBILITY OF A PERSON TRAINED AND CERTIFIED TO INSTALL HVAC SYSTEMS OR CONTRACTOR LICENSED TO INSTALL HVAC SYSTEMS. EXAMPLES OF ACCEPTABLE HVAC TRAINING AND CERTIFICATION PROGRAMS INCLUDE BUT ARE NOT LIMITED TO THE FOLLOWING:

1. STATE CERTIFIED APPRENTICESHIP PROGRAMS.
2. PUBLIC UTILITY TRAINING PROGRAMS.
3. TRAINING PROGRAMS SPONSORED BY TRADE, LABOR OR STATEWIDE ENERGY CONSULTING OR VERIFICATION ORGANIZATIONS.
4. PROGRAMS SPONSORED BY MANUFACTURING ORGANIZATIONS.
5. OTHER PROGRAMS ACCEPTABLE TO THE ENFORCING AGENCY.

702.2 SPECIAL INSPECTION [HCD]
WHEN REQUIRED BY THE ENFORCING AGENCY, THE OWNER OR THE RESPONSIBLE ENTITY ACTING AS THE OWNER'S AGENT SHALL EMPLOY ONE OR MORE SPECIAL INSPECTORS TO PROVIDE INSPECTION OR OTHER DUTIES NECESSARY TO SUBSTANTIATE COMPLIANCE WITH THIS CODE. SPECIAL INSPECTORS SHALL DEMONSTRATE COMPETENCE TO THE SATISFACTION OF THE ENFORCING AGENCY FOR THE PARTICULAR TYPE OF INSPECTION OR TASK TO BE PERFORMED. IN ADDITION TO OTHER CERTIFICATIONS OR QUALIFICATIONS ACCEPTABLE TO THE ENFORCING AGENCY, THE FOLLOWING CERTIFICATIONS OR EDUCATION MAY BE CONSIDERED BY THE ENFORCING AGENCY WHEN EVALUATING THE QUALIFICATIONS OF A SPECIAL INSPECTOR:

1. CERTIFICATION BY A NATIONAL OR REGIONAL GREEN BUILDING PROGRAM OR STANDARD PUBLISHER.
2. CERTIFICATION BY A STATEWIDE ENERGY CONSULTING OR VERIFICATION ORGANIZATION, SUCH AS HERS RATERS, BUILDING PERFORMANCE CONTRACTORS, AND HOME ENERGY AUDITORS.
3. SUCCESSFUL COMPLETION OF A THIRD PARTY APPRENTICE TRAINING PROGRAM IN THE APPROPRIATE TRADE.
4. OTHER PROGRAMS ACCEPTABLE TO THE ENFORCING AGENCY.

NOTES:
1. SPECIAL INSPECTORS SHALL BE INDEPENDENT ENTITIES WITH NO FINANCIAL INTEREST IN THE MATERIALS OR THE PROJECT THEY ARE INSPECTING FOR COMPLIANCE WITH THIS CODE.
2. HERS RATERS ARE SPECIAL INSPECTORS CERTIFIED BY THE CALIFORNIA ENERGY COMMISSION (CEC) TO RATE HOMES IN CALIFORNIA ACCORDING TO THE HOME ENERGY RATING SYSTEM (HERS).

[BSC-CG] WHEN REQUIRED BY THE ENFORCING AGENCY, THE OWNER OR THE RESPONSIBLE ENTITY ACTING AS THE OWNER'S AGENT SHALL EMPLOY ONE OR MORE SPECIAL INSPECTORS TO PROVIDE INSPECTION OR OTHER DUTIES NECESSARY TO SUBSTANTIATE COMPLIANCE WITH THIS CODE. SPECIAL INSPECTORS SHALL DEMONSTRATE COMPETENCE TO THE SATISFACTION OF THE ENFORCING AGENCY FOR THE PARTICULAR TYPE OF INSPECTION OR TASK TO BE PERFORMED. IN ADDITION, THE SPECIAL INSPECTOR SHALL HAVE A CERTIFICATION FROM A RECOGNIZED STATE, NATIONAL OR INTERNATIONAL ASSOCIATION, AS DETERMINED BY THE LOCAL AGENCY. THE AREA OF CERTIFICATION SHALL BE CLOSELY RELATED TO THE PRIMARY JOB FUNCTION, AS DETERMINED BY THE LOCAL AGENCY.

NOTE:
SPECIAL INSPECTORS SHALL BE INDEPENDENT ENTITIES WITH NO FINANCIAL INTEREST IN THE MATERIALS OR THE PROJECT THEY ARE INSPECTING FOR COMPLIANCE WITH THIS CODE.

703 VERIFICATIONS

703.1 DOCUMENTATION.
DOCUMENTATION USED TO SHOW COMPLIANCE WITH THIS CODE SHALL INCLUDE BUT IS NOT LIMITED TO, CONSTRUCTION DOCUMENTS, PLANS, SPECIFICATIONS, BUILDER OR INSTALLER CERTIFICATION, INSPECTION REPORTS, OR OTHER METHODS ACCEPTABLE TO THE ENFORCING AGENCY WHICH DEMONSTRATE SUBSTANTIAL CONFORMANCE. WHEN SPECIFIC DOCUMENTATION OR SPECIAL INSPECTION IS NECESSARY TO VERIFY COMPLIANCE, THAT METHOD OF COMPLIANCE WILL BE SPECIFIED IN THE APPROPRIATE SECTION OR IDENTIFIED APPLICABLE CHECKLIST.

rrm design group
rrmdesign.com | (805) 543-1794
3765 SOUTH HIGUERA STREET, SUITE 102
SAN LUIS OBISPO, CA 93401

THE INCLUDED DRAWINGS, SPECIFICATIONS, IDEAS, DESIGNS AND ARRANGEMENTS REPRESENTED THEREBY ARE AND SHALL REMAIN THE PROPERTY OF RRM DESIGN GROUP AND NO PART THEREOF SHALL BE COPIED, DISCLOSED TO OTHERS OR USED IN CONNECTION WITH ANY WORK OR PROJECT OTHER THAN THE SPECIFIED PROJECT FOR WHICH THEY HAVE BEEN PREPARED AND DEVELOPED WITHOUT THE WRITTEN CONSENT OF RRM DESIGN GROUP. VISUAL CONTACT WITH THESE DRAWINGS OR SPECIFICATIONS SHALL CONSTITUTE CONCLUSIVE EVIDENCE OF ACCEPTANCE OF THESE RESTRICTIONS. SUBMITTAL OF THESE DOCUMENTS FOR PUBLIC AGENCY REVIEW SHALL NOT BE CONSIDERED A WAIVER OF RRM DESIGN GROUP'S RIGHTS.
RRM DESIGN GROUP COPYRIGHT 2022
RRM IS A CALIFORNIA CORPORATION

LICENSED ARCHITECT
THADDEUS SCOTT LUPTON
C39678
10-31-25
RENEWAL DATE
STATE OF CALIFORNIA

CONSULTANT

AGENCY

FOURTH ST COMMUNITY CENTER AND PARK
HENDERSON AVE., PORTERVILLE, CA 93257

CAL GREEN REQUIREMENTS

NO.	REVISION	DATE
△		
△		
△		
△		
△		
△		

PLAN CHECK REVISION 2

PROJECT MANAGER
TSL
DRAWN BY
MC, NA, PM
CHECKED BY
DD, KF
DATE
2024.09.17
PROJECT NUMBER
2883-01-RC22
SHEET
GA205

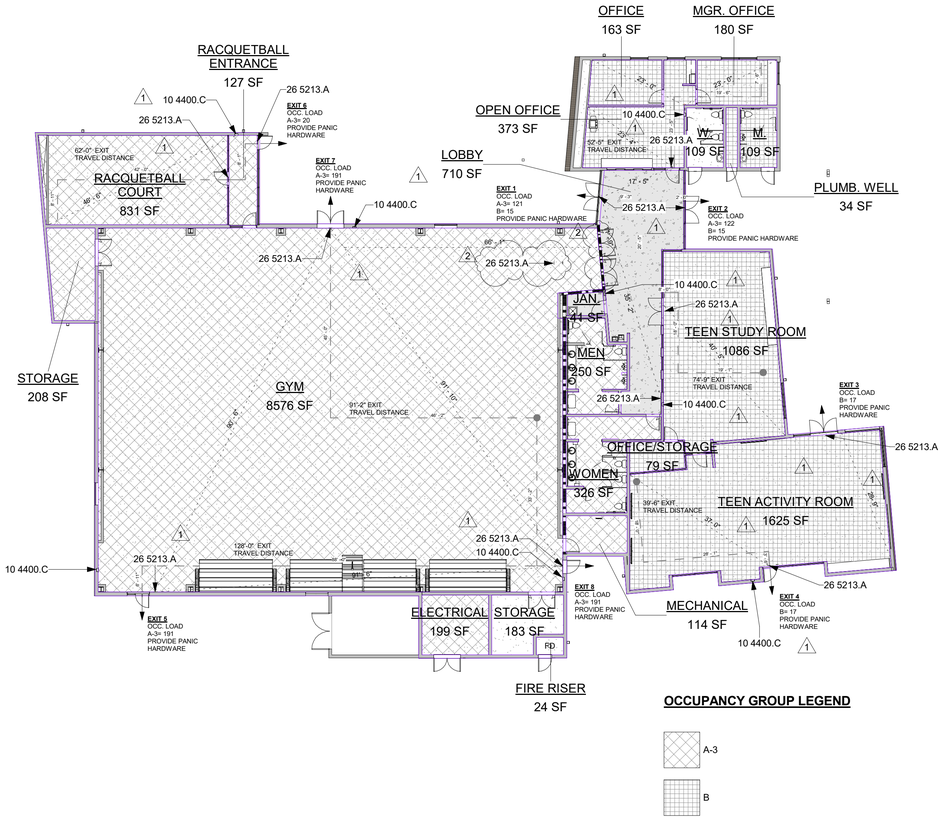

OCCUPANCY GROUP LEGEND

A-3

B

1 GROUND FLOOR PLAN

A201 GA401 SCALE: 1/16" = 1'-0"

GROUND FLOOR OCCUPANCY CALCULATIONS

AREA NAME	AREA	NET / GROSS	OCCUPANCY TYPE	FUNCTION OF SPACE (2022 CBC TABLE 1004.5)	LOAD FACTOR	OCCUPANT LOAD	MAX. OCC. LOAD FOR ONE EXIT (2022 CBC TABLE 1006.2.1)	EXITS REQUIRED
RACQUETBALL COURT	831 SF	GROSS	A-3	EXERCISE ROOMS	50	17		1
RACQUETBALL ENTRANCE	127 SF	GROSS	A-3	EXERCISE ROOMS	50	3		1
GYM	8576 SF	NET	A-3	STAGES AND PLATFORMS	15	572		2
STORAGE	208 SF	GROSS	A-3	ACCESSORY STORAGE AREAS, MECHANICAL EQUIPMENT ROOM	300	1		1
ELECTRICAL	199 SF	GROSS	A-3	ACCESSORY STORAGE AREAS, MECHANICAL EQUIPMENT ROOM	300	1		1
MECHANICAL	114 SF	GROSS	A-3	ACCESSORY STORAGE AREAS, MECHANICAL EQUIPMENT ROOM	300	1		1
TEEN ACTIVITY ROOM	1625 SF	NET	B	EDUCATIONAL: SHOPS AND OTHER VOCATIONAL ROOM AREAS	50	33		1
TEEN STUDY ROOM	1086 SF	NET	B	EDUCATIONAL: SHOPS AND OTHER VOCATIONAL ROOM AREAS	50	22		1
OFFICE	163 SF	GROSS	B	BUSINESS AREAS	150	2		1
OPEN OFFICE	373 SF	GROSS	B	BUSINESS AREAS	150	3		1
MGR. OFFICE	180 SF	GROSS	B	BUSINESS AREAS	150	2		1
PLUMB. WELL	34 SF	GROSS	B	ACCESSORY STORAGE AREAS, MECHANICAL EQUIPMENT ROOM	300	1		1
M.	109 SF	GROSS	B	ACCESSORY STORAGE AREAS, MECHANICAL EQUIPMENT ROOM	300	1		1
LOBBY	710 SF	GROSS	B	BUSINESS AREAS	150	5		2
MEN	250 SF	GROSS	A-3	ACCESSORY STORAGE AREAS, MECHANICAL EQUIPMENT ROOM	300	1		1
WOMEN	326 SF	GROSS	A-3	ACCESSORY STORAGE AREAS, MECHANICAL EQUIPMENT ROOM	300	2		1
FIRE RISER	24 SF	GROSS		ACCESSORY STORAGE AREAS, MECHANICAL EQUIPMENT ROOM	300	1		
OFFICE/STORAGE	79 SF	GROSS	B	BUSINESS AREAS	150	1		
JAN.	41 SF	GROSS		ACCESSORY STORAGE AREAS, MECHANICAL EQUIPMENT ROOM	300	1		
W.	109 SF	GROSS		ACCESSORY STORAGE AREAS, MECHANICAL EQUIPMENT ROOM	300	1		
STORAGE	183 SF	GROSS		ACCESSORY STORAGE AREAS, MECHANICAL EQUIPMENT ROOM	300	1		
						672		

CODE ANALYSIS (CBC 2022)

1. FIRE-RESISTANCE RATED CONSTRUCTION		
BUILDING ELEMENTS	FLOOR, BEARING WALLS 0 HR	T-601
EXTERIOR WALLS	0 HR	T-602
OPENINGS AT EXTERIOR WALLS	See Allowable Openings Below	T-705.8
FIRE WALLS	2 HR Rated	706
FIRE BARRIERS	1 HR	707.3
FIRE PARTITIONS	1 HR	708
CONCEALED SPACES	PROVIDE FIREBLOCKING AS REQUIRED IN WALL CONSTRUCTION, DRAFT STOPPPING AT PARTITIONS IN FLOORS AND ATTICS, ADDITIONAL DRAFTSTOPPING NOT REQUIRED IN BUILDINGS SPRINKERED IN ACCORDANCE WITH 903.3.1.1	718
HORIZONTAL ASSEMBLIES	0 HR	711
PENETRATIONS	PENETRATIONS THROUGH RATED ASSEMBLIES TO BE PROTECTED IN ACCORDANCE W/CBC 2022	714
WILDFIRE EXPOSURE	N/A PROJECT NOT LOCATED IN A FIRE SAFETY ZONE	7A
2. MEANS OF EGRESS		
STAIRS	N/A	1011.2
RAMPS	N/A	1012
COMMON PATH OF EGRESS TRAVEL	A-3: 75 FT MAX, B: 100 FT MAX.	1006.2
MINIMUM NUMBER OF EXITS		1006.3
EXIT ACCESS TRAVEL DISTANCE	250 FT	T-1017.2
INTERIOR EXIT STAIRWAYS	N/A	1023
3. ACCESSIBILITY		
COVERED MULTIFAMILY DWELLING UNITS	N/A	CTCAC Regulations
PARKING SPACES	SEE AS-101	11B-208
ACCESSIBLE ROUTES OF TRAVEL	ALL SITE ARRIVAL AND INTERIOR CONNECTING ROUTES SHALL BE ACCESSIBLE	11B-206.2
4. INTERIOR ENVIRONMENT		
ROOF VENTILATION	--	1202.2
SOUND TRANSMISSION	--	1206
5. ROOF ASSEMBLIES		
FIRE CLASSIFICATION	--	1505
6. FIRE EXTINGUISHERS		
7. FIRE EXTINGUISHERS	MINIMUM OF ONE RATED FIRE ESTINGUISHER 2-A PER 11,250 SF. MAXIMUM TRAVEL DISTANCE OF 75 FT PER FIRE ESTINGUISHER.	906.3

BUILDING INFORMATION

GENERAL BUILDING INFORMATION - ALLOWED
(BASED ON THE 2022 CBC)

OCCUPANCY CLASIFICATION *(SEC. 302.1)*	A-3, B
CONSTRUCTION TYPE *(TABLE 601)*	V-B
ALLOWABLE BUILDING HEIGHT *(TABLE 504.3)*	60'-0"
ALLOWABLE NUMBER OF STORIES *(TABLE 504.4)*	2
ALLOWABLE BUILDING AREA PER STORY *(TABLE 506.2)*	24,000 SF
TOTAL ALLOWABLE BUILDING AREA *(TABLE 506.2)*	24,000 SF

GENERAL BUILDING INFORMATION - PROPOSED

PROPOSED BUILDING HEIGHT	41'-8"
PROPOSED NUMBER OF STORIES	1
PROPOSED BUILDING AREA	SEE SCHEDULE BELOW
AUTOMATIC FIRE SPRINKLERS	NFPA 13

BUILDING AREA SCHEDULE	
AREA	AREA NAME
15549 SF	GROUND FLOOR

KEYNOTES

10 4400.C RECESSED FIRE EXTINGUISHER CABINET WITH EXTINGUISHER, 2A:10B:C RATING PER DETAIL 41/A-941

26 5213.A ILLUMINATED EXIT SIGN. REFER TO ELECTRICAL

NOTE:
FIRE EXTINGUISHER FINAL LOCATION TO BE CONFIRMED BY FIRE MARSHALL

ALLOWED OPENINGS

MAXIMUM AREA OF EXTERIOR WALL OPENINGS BASED ON FIRE SEPARATION DISTANCE AND DEGREE OF OPENING PROTECTION
(CBC 2022 TABLE 705.8)

DEGREE OF OPENING PROTECTION: UNPROTECTED, NONSPRINKLERED (UP,NS)
(PER CBC 2022 SECTION 705.8.1)

0' ≤ x < 3'	NOT PERMITTED
3' ≤ x < 5'	NOT PERMITTED
5' ≤ x < 10'	10%
10' ≤ x < 15'	15%
15' ≤ x < 20'	25%
20' ≤ x < 25'	45%
25' ≤ x < 30'	70%
30' ≤ x	NO LIMIT

NOTE:
THIS BUILDING INCLUDES AN NFPA 13R FIRE SPRINKLER SYSTEM.

PROPOSED OPENINGS

NORTH ELEVATION
ALLOWABLE OPENINGS: NO LIMIT
PROPOSED OPENINGS: 50' - 0" +

SOUTH ELEVATION
ALLOWABLE OPENINGS: NO LIMIT
PROPOSED OPENINGS: 50' - 0" +

EAST ELEVATION
ALLOWABLE OPENINGS: NO LIMIT
PROPOSED OPENINGS: 50' - 0" +

WEST ELEVATION
ALLOWABLE OPENINGS: NO LIMIT
PROPOSED OPENINGS: 50' - 0" +

LEGEND

SEPARATION & SYMBOLS:

1-HOUR RATED FIRE BARRIER
(CONTINUOUS PROTECTION FROM FOUNDATION TO ROOF SHEATHING) H/A921

OCCUPANT EGRESS:

ACCESSIBLE PATH OF TRAVEL
(X'-X") (SHALL BE 48" MIN. CBC 11B-403.5)

COMMON PATH OF EGREES TRAVEL (CPET)
WITH MAXIMUM TRAVEL DISTANCE FROM REMOTE POINT

EXIT SIGNAGE DISTANCE
(SHALL BE 100' MIN. CBC 1013.1)

(X) NUMBER OF OCCUPANTS EXITING SPACE

[X] COMBINED OCCUPANT COUNT ALONG P.O.T.

BLEACHER SEATING COUNT

BLEACHER SEATING COUNT
ROW SEATING SPACE: 681.5"
NUMBER OF ROWS: 4

TOTAL AVAILABLE SEATING SPACE: 681.5" x 4= 2,726"

2,726"/18"= 151.44 = 152

PER ICC 300, WHEN OCCUPANT LOAD IS 0-250 ONLY 1 EXIT IS REQUIRED.

rrm design group
rrmdesign.com | (805) 543-1794
3765 SOUTH HIGUERA STREET SUITE 102
SAN LUIS OBISPO, CA 93401

THE INCLUDED DRAWINGS, SPECIFICATIONS, IDEAS, DESIGNS AND ARRANGEMENTS REPRESENTED THEREBY ARE AND SHALL REMAIN THE PROPERTY OF RRM DESIGN GROUP AND NO PART THEREOF SHALL BE COPIED, DISCLOSED TO OTHERS OR SUBSTANTIALLY USED FOR ANY PURPOSE WITHOUT THE PRIOR WRITTEN CONSENT OF PROJECT FOR WHICH THEY HAVE BEEN PREPARED AND DEVELOPED WITHOUT THE WRITTEN CONSENT OF RRM DESIGN GROUP. VISUAL CONTACT WITH THESE DRAWINGS OR SPECIFICATIONS SHALL CONSTITUTE CONCLUSIVE EVIDENCE OF ACCEPTANCE OF THESE RESTRICTIONS. ALL DRAWINGS, SPECIFICATIONS AND ARRANGEMENTS SHALL NOT BE CONSIDERED A WAIVER OF RRM DESIGN GROUP'S RIGHTS.
RRM DESIGN GROUP COPYRIGHT 2022
RRM IS A CALIFORNIA CORPORATION

LICENSED ARCHITECT
MICHELLE SCOTT LUPO
C39678
10-31-25
RENEWAL DATE
STATE OF CALIFORNIA

CONSULTANT

AGENCY

FOURTH ST COMMUNITY CENTER AND PARK
HENDERSON AVE., PORTERVILLE, CA 93257

CODE ANALYSIS

NO.	REVISION	DATE
1	PLAN CHECK REVISION 1	05/17/24
2	PLAN CHECK REVISION 2	09/17/24

PLAN CHECK REVISION 2

PROJECT MANAGER
TSL
DRAWN BY MC, NA, PM
CHECKED BY DD, KF
DATE
2024.09.17
PROJECT NUMBER
2883-01-RC22
SHEET
GA401

9/20/2024 11:04:10 AM
Autodesk Docs://2883-01_Porterville Fourth St Community Center/2883-01-RC22_Porterville_v22.rvt

PROJECT TEAM LIST

TITLE	NAME	DESK NUMBER	EMAIL ADDRESS
PRINCIPAL IN CHARGE	BRIAN STARRETT	805.540.5358	BSTARRETT@3CENG.COM
PROJECT MANAGER	DENVER STANGER	805.540.5388	DSTANGER@3CENG.COM
MECHANICAL DESIGNER	BEN SWANSON	805.540.3363 EXT 317	BSWANSON@3CENG.COM
PLUMBING DESIGNER	RANDY CARMINATI	805.540.3363 EXT 319	RCARMINATI@3CENG.COM
ENERGY COMPLIANCE	DANICA RESURRECCION	805.540.3363 EXT 313	DRESURRECCION@3CENG.COM

SHEET INDEX

SHEET NUMBER	SHEET TITLE
T-240	ENERGY COMPLIANCE DOCUMENTATION
T-241	ENERGY COMPLIANCE DOCUMENTATION
T-242	ENERGY COMPLIANCE DOCUMENTATION

CERTIFICATE OF COMPLIANCE - NONRESIDENTIAL PERFORMANCE COMPLIANCE METHOD	NRCC-PRF-E
Nonresidential Performance Compliance Method	(Page 1 of 23)
Project Name: Porterville Community Center	Date Prepared: 2024-05-10

A. General Information

1	Project Name	Porterville Community Center			
2	Run Title	Title 24 Analysis			
3	Project Location	N 4th St.			
4	City	Porterville	5	Standards Version	Compliance 2022
6	Zip code	93257	7	Compliance Software (version)	EnergyPro 9.2
8	Climate Zone	13	9	Building Orientation (deg)	0
10	Building Type(s)	• Nonresidential	11	Weather File	VISALIA_STYP20.epw
12	Project Scope	• New complete scope	13	Number of Dwelling Units	0
14	Total Conditioned Floor Area in Scope (ft^2)	16010	15	Total # of hotel/motel rooms	0
16	Total Unconditioned Floor Area (ft^2)	357	17	Fuel Type	Natural gas
18	Nonresidential Conditioned Floor Area	16010	19	Total # of Stories (Habitable Above Grade)	1
20	Residential Conditioned Floor Area	0			

CERTIFICATE OF COMPLIANCE - NONRESIDENTIAL PERFORMANCE COMPLIANCE METHOD	NRCC-PRF-E
Nonresidential Performance Compliance Method	(Page 2 of 23)

B. PROJECT SUMMARY

Table B shows which building components are included in the performance calculation. If indicated as not included, the project must show compliance prescriptively if within the permit application.

Building Components Complying via Performance						Building Components Complying Prescriptively	
Envelope (See Table G)	Nonres	Performance	Solar Thermal Water Heating (See Table I3)	☐	Performance	The following building components are ONLY eligible for prescriptive compliance and should be documented on the NRCC form listed if within the scope of the permit application (i.e. compliance will not be shown on the NRCC-PRF-E).	
	MultiFam	Not Included		☒	Not Included		
Mechanical (See Table H)	Nonres	Performance	Covered Process: Commercial Kitchens (see Table J)	☐	Performance	Indoor Lighting (Unconditioned) 140.6 & 170.2(e)	NRCC-LTI-E is required
	MultiFam	Not Included		☒	Not Included	Outdoor Lighting 140.7 & 170.2(e)	NRCC-LTO-E is required
Domestic Hot Water (See Table I)	Nonres	Performance	Covered Process: Laboratory Exhaust (see Table J)	☐	Performance	Sign Lighting 140.8 & 170.2(e)	NRCC-LTS-E is required
	MultiFam	Not Included		☒	Not Included	**Building Components Complying with Mandatory Measures**	
Lighting (Indoor Conditioned, see Table K)	Nonres	Performance	Photovoltaics (see Table F)	☐	Performance	Electrical power systems, commissioning, solar ready, elevator and escalator requirements are mandatory and should be documented on the NRCC form listed if applicable (i.e. compliance will not be shown on the NRCC-PRF-E.)	
	MultiFam	Not Included		☒	Not Included	Electrical Power Distribution 110.11	NRCC-ELC-E is required
			Battery (see Table F)	☐	Performance	Commissioning 120.8	NRCC-CXR-E is required
				☒	Not Included	Solar and Battery 110.10	NRCC-SAB-E is required

CERTIFICATE OF COMPLIANCE - NONRESIDENTIAL PERFORMANCE COMPLIANCE METHOD	NRCC-PRF-E
Nonresidential Performance Compliance Method	(Page 3 of 23)

C1. COMPLIANCE SUMMARY

COMPLIES[3]

	Time Dependent Valuaton (TDV)		Source Energy Use
	Efficiency[1] (kBtu/ft^2 - yr)	Total[2] (kBtu/ft^2 - yr)	Total[2] (kBtu/ft^2 - yr)
Standard Design	368.09	368.09	29.98
Proposed Design	287.06	287.06	19.2
Compliance Margins	**81.03**	**81.03**	**10.78**
	Pass	**Pass**	**Pass**

[1] Efficiency measures include improvements like a better building envelope and more efficient equipment
[2] Compliance Totals include efficiency, photovoltaics and batteries
[3] New Construction, Complete Addition Scope: Building complies when all efficiency and total compliance margins are greater than or equal to zero and unmet load hour limits are not exceeded
Existing, Addition and Alteration Scope: Building complies when efficiency compliance margin is greater than or equal to zero and unmet load hour limits are not exceeded

CERTIFICATE OF COMPLIANCE - NONRESIDENTIAL PERFORMANCE COMPLIANCE METHOD	NRCC-PRF-E
Nonresidential Performance Compliance Method	(Page 4 of 23)

C2. TDV ENERGY COMPLIANCE RESULTS FOR PERFORMANCE COMPONENTS (Annual TDV Energy Use, kBtu/ft^2 - yr)

COMPLIES[2]

Energy Component	Standard Design (TDV)	Proposed Design (TDV)	Compliance Margin (TDV)[1]
Space Heating	18.96	17.55	1.41
Space Cooling	146.35	126.95	19.4
Indoor Fans	59.16	75.43	-16.27
Heat Rejection	0	0	0
Pumps & Misc.	0	0	0
Domestic Hot Water	25.93	19.04	6.89
Indoor Lighting	117.69	48.09	69.6
Flexibility	---	---	---
EFFICIENCY COMPLIANCE TOTAL	**368.09**	**287.06**	**81.03 (22%)**
Photovoltaics	---	---	---
Batteries	---	---	---
TOTAL COMPLIANCE	**368.09**	**287.06**	**81.03 (22%)**

[1] Notes: This number in parenthesis following the Compliance Margin in column 4, represents the Percent Better than Standard.

CERTIFICATE OF COMPLIANCE - NONRESIDENTIAL PERFORMANCE COMPLIANCE METHOD	NRCC-PRF-E
Nonresidential Performance Compliance Method	(Page 5 of 23)

C3. TDV ENERGY RESULTS FOR NON-REGULATED COMPONENTS[1]

Non-Regulated Energy Component	Standard Design (TDV)	Proposed Design (TDV)	Compliance Margin (TDV)[1]
Receptacle	71.65	71.65	---
Process	---	---	---
Other Ltg	1.05	1.05	---
Process Motors	2.01	3.51	-1.5
TOTAL (TOTAL COMPLIANCE + NON-REGULATED COMPONENTS)	**442.8**	**363.27**	**79.53 (18%)**

[1] Notes: This table is not used for Energy Code Compliance.

CERTIFICATE OF COMPLIANCE - NONRESIDENTIAL PERFORMANCE COMPLIANCE METHOD	NRCC-PRF-E
Nonresidential Performance Compliance Method	(Page 6 of 23)

C4. SOURCE ENERGY COMPLIANCE RESULTS FOR PERFORMANCE COMPONENTS (Annual SOURCE Energy Use, kBtu/ft^2 /yr)

COMPLIES[2]

Energy Component	Standard Design (SOURCE)	Proposed Design (SOURCE)	Compliance Margin (SOURCE)[1]
Space Heating	2.5	2.28	0.22
Space Cooling	6.19	5.37	0.82
Indoor Fans	4.78	6.22	-1.44
Heat Rejection	0	0	0
Pumps & Misc.	0	0	0
Domestic Hot Water	7.8	1.77	6.03
Indoor Lighting	8.71	3.56	5.15
Flexibility	---	---	---
EFFICIENCY COMPLIANCE TOTAL	**29.98**	**19.2**	**10.78 (36%)**
Photovoltaics	---	---	---
Batteries	---	---	---
TOTAL COMPLIANCE	**29.98**	**19.2**	**10.78 (36%)**

[1] Notes: This number in parenthesis following the Compliance Margin in column 4, represents the Percent Better than Standard.

CERTIFICATE OF COMPLIANCE - NONRESIDENTIAL PERFORMANCE COMPLIANCE METHOD	NRCC-PRF-E
Nonresidential Performance Compliance Method	(Page 7 of 23)

C5. SOURCE ENERGY RESULTS FOR NON-REGULATED COMPONENTS[1]

Non-Regulated Energy Component	Standard Design (SOURCE)	Proposed Design (SOURCE)	Compliance Margin (SOURCE)[1]
Receptacle	5.27	5.27	---
Process	---	---	---
Other Ltg	0.08	0.08	---
Process Motors	0.16	0.28	-0.12
TOTAL (TOTAL COMPLIANCE + NON-REGULATED COMPONENTS)	**35.49**	**24.83**	**10.66 (30%)**

[1] Notes: This table is not used for Energy Code Compliance.

C6. 'ABOVE CODE' QUALIFICATIONS

☐ This project is pursuing CalGreen Tier 1 ☐ This project is pursuing CalGreen Tier 2

CERTIFICATE OF COMPLIANCE - NONRESIDENTIAL PERFORMANCE COMPLIANCE METHOD	NRCC-PRF-E
Nonresidential Performance Compliance Method	(Page 8 of 23)

C7. ENERGY USE SUMMARY

Energy Component	Standard Design Site (MWh)	Proposed Design Site (MWh)	Margin (MWh)	Standard Design Site (MBtu)	Proposed Design Site (MBtu)	Margin (MBtu)
Space Heating	9.6	8.9	0.7	---	---	---
Space Cooling	61.9	51.3	10.6	---	---	---
Indoor Fans	33.7	43.8	-10.1	---	---	---
Heat Rejection	---	---	---	---	---	---
Pumps & Misc.	---	---	---	---	---	---
Domestic Hot Water	3.6	11.7	-8.1	125.1	---	---
Indoor Lighting	72.9	29.8	43.1	---	---	---
Flexibility	---	---	---	---	---	---
EFFICIENCY TOTAL	**181.7**	**145.5**	**36.2**	**125.1**	**0**	**125.1**
Photovoltaics	---	---	---	---	---	---
Batteries	---	---	---	---	---	---
ENERGY USE SUBTOTAL	**181.7**	**145.5**	**36.2**	**125.1**	**0**	**125.1**
Receptacle	44.4	44.4	0	---	---	---
Process	---	---	---	---	---	---
Other Ltg	0.7	0.7	0	---	---	---
Process Motors	1.2	2	-0.8	---	---	---
ENERGY USE TOTAL	**228**	**192.6**	**35.4**	**125.1**	**0**	**125.1**

rrm design group
rrmdesign.com | (805) 543-1794
3765 S. Higuera, San Luis Obispo, CA 93401

THE INCLUDED DRAWINGS, SPECIFICATIONS, IDEAS, DESIGNS AND ARRANGEMENTS REPRESENTED THEREBY ARE AND SHALL REMAIN THE PROPERTY OF RRM DESIGN GROUP AND NO PART THEREOF SHALL BE COPIED, DISCLOSED TO OTHERS OR USED IN CONNECTION WITH ANY WORK OR PROJECT OTHER THAN THE SPECIFIED PROJECT FOR WHICH THEY HAVE BEEN PREPARED AND DEVELOPED WITHOUT THE WRITTEN CONSENT OF RRM DESIGN GROUP. VISUAL CONTACT WITH THESE DRAWINGS OR SPECIFICATIONS SHALL CONSTITUTE CONCLUSIVE EVIDENCE OF ACCEPTANCE OF THESE RESTRICTIONS. SUBMITTAL OF THESE DOCUMENTS FOR PUBLIC AGENCY REVIEW SHALL NOT BE CONSIDERED A WAIVER OF RRM DESIGN GROUP'S RIGHTS.
RRM DESIGN GROUP COPYRIGHT 2021
RRM IS A CALIFORNIA CORPORATION

REGISTERED PROFESSIONAL ENGINEER
BRIAN P. STARRETT
M 34068
EXP. 6/30/24
MECHANICAL
STATE OF CALIFORNIA

CONSULTANT

3C | ENGINEERING
SMARTER BUILDINGS BY DESIGN
805. 540. 3363 WWW.3CENG.COM
1500 PALM ST. SAN LUIS OBISPO, CA 93401

BY 3C Engineering, Inc., ALL COMMON LAW COPYRIGHT AND OTHER PROPERTY RIGHTS RESERVE THIS DOCUMENT AS AN ORIGINAL AND UNPUBLISHED WORK PRODUCT. THIS WORK SHALL NOT BE DUPLICATED, COPIED, DISCLOSED OR USED IN CONNECTION WITH ANY WORK OR PROJECT OTHER THAN THE SPECIFIC PROJECT FOR WHICH IT AS BEEN PREPARED, NOR SHALL IT BE ASSIGNED TO ANY THIRD PARTY WITHOUT FIRST OBTAINING THE EXPRESS WRITTEN CONSENT OF VISUAL CONTACT. THIS DOCUMENT SHALL CONSTITUTE CONCLUSIVE EVIDENCE OF ACCEPTANCE OF THESE RESTRICTIONS.

AGENCY

FOURTH ST COMMUNITY CENTER AND PARK
HENDERSON AVE., PORTERVILLE, CA 93257
ENERGY COMPLIANCE DOCUMENTATION

100% CONSTRUCTION DOCUMENTS

NO.	REVISION	DATE
1	PLAN CHECK REVISION 1	5/17/24

PROJECT MANAGER: DS
DRAWN BY: BS
CHECKED BY: BS
DATE: 2024.05.17
PROJECT NUMBER: 2883-01-RC22
SHEET: T-240

S:\Shared\Jobs\ENG Projects\Porterville Community Center\Engineering\Porterville Community Center T24.dwg khanjiev May 15,2024-12:57pm

H8. SYSTEM SPECIAL FEATURES

01	02	03	04
System Name	Equipment Type	Interlocks per 140.4(n)[1]	Other Special Features and Controls
PHP_1	Package SZ VAV Heat Pump Air System	N/A	Zone(s) With CO2 Sensor Vent. Control Fixed DB
PHP_2	Single Zone Heat Pump (SZHP) Air System	N/A	Fixed DB
PHP_3	Package SZ VAV Heat Pump Air System	N/A	Fixed DB
PHP-4A4B	Package SZ VAV Heat Pump Air System	N/A	Zone(s) With CO2 Sensor Vent. Control Fixed DB
WH-11 - SHW	Service Hot Water	N/A	Fixed Temperature Control

Notes: This table includes controls related to the performance path only. For projects using the prescriptive path, mandatory and prescriptive controls requirements are documented on the NRCC-MCH-E.

[1] Yes = interlocks are provided, No = interlocks are not provided, NA means no operable openings.

H9. NONRESIDENTIAL / COMMON USE AREA & HOTEL/MOTEL VENTILATION

01	02	03	04	05	06	07
Zone Name	Mechanical Ventilation				Conditioned Area (sf)	DCV or Occupant Sensor Controls, or Both
	Ventilation Function	# of People	Supply OA CFM	Exhaust CFM		
1-Toilets public	Exhaust - Toilets, public Assembly - Lobbies General - Corridors	22.27	301.95	950	1377	DCV
3-Assembly - Libraries	Assembly - Libraries (reading rooms and stack areas) NA	11.57	173.55	0	1245	N/A
4-Assembly - Libraries	Assembly - Libraries (reading rooms and stack areas)	17.41	261.15	0	1741	N/A

H9. NONRESIDENTIAL / COMMON USE AREA & HOTEL/MOTEL VENTILATION

01	02	03	04	05	06	07
Zone Name	Mechanical Ventilation				Conditioned Area (sf)	DCV or Occupant Sensor Controls, or Both
	Ventilation Function	# of People	Supply OA CFM	Exhaust CFM		
5-Sports arena	Sports/Entertainment - Gym, sports arena (play area) General - Unoccupied	356.33	4421.5	0	9461	DCV
6-Office < 250 SF	Office - Office space General - Corridors	4.37	130.95	0	873	N/A
9-Health club/aerobics room	Sports/Entertainment - Health club/aerobics room General - Corridors	10.04	162.15	0	1081	N/A
10-Elec. General - Unoccupie	General - Unoccupied	0.35	0	0	232	N/A

H11. ZONAL SYSTEM AND TERMINAL UNIT SUMMARY

01	02	03	04	05	06	07	08	09	10	11	12
System ID	System Type	Qty	Rated Capacity (kBtuh)		Airflow (cfm)			Fan			VSD
			Heating	Cooling	Design	Min.	Min. Ratio	Power	Power Units	Cycles	
1-Toilets public-Trm	Variable Air Volume No Reheat Box	1	N/A	N/A	2,400	1,585	0.66	N/A	N/A	N/A	☐
3-Assembly - Libraries-Trm	Uncontrolled	1	N/A	N/A	1,200	N/A	0	N/A	N/A	N/A	☐
4-Assembly - Libraries-Trm	Variable Air Volume No Reheat Box	1	N/A	N/A	3,400	2,244	0.66	N/A	N/A	N/A	☐
5-Sports arena-Trm	Variable Air Volume No Reheat Box	2	N/A	N/A	20,000	13,200	0.66	N/A	N/A	N/A	☐
6-Office < 250 SF-Trm	Uncontrolled	1	N/A	N/A	1,485	N/A	0	N/A	N/A	N/A	☐

H11. ZONAL SYSTEM AND TERMINAL UNIT SUMMARY

01	02	03	04	05	06	07	08	09	10	11	12
System ID	System Type	Qty	Rated Capacity (kBtuh)		Airflow (cfm)			Fan			VSD
			Heating	Cooling	Design	Min.	Min. Ratio	Power	Power Units	Cycles	
9-Health club/aerobics room-Trm	Uncontrolled	1	N/A	N/A	1,485	N/A	0	N/A	N/A	N/A	☐
D5-1 (CONFIRM TENTATIVE E	Single Zone Heat Pump	1	0	36	920	N/A	N/A	0.06	BHP	Cycling	☐

I1. WATER HEATER EQUIPMENT SUMMARY

01	02	03	04	05	06	07	08	09	10	11	12	13	14
Name	Heater Element Type	Tank Type	Qty	Tank Vol (gal)	Rated Input	Rated Input Unit	Efficiency	Efficiency Unit	Tank Insulation R-value Int/Ext	Standby Loss Fraction	1st Hr. Rating or Flow Rate (gal)	Heat Pump Type	Tank Location or Ambient Condition
Rheem PROPH50 T2 RH375-5O2	Electricity	Storage	1	50	5.86	kW	3.2	UEF	N/A	N/A	80	Heat Pump Split Water Heater	N/A

G6A. OPAQUE DOOR SUMMARY (NONRESIDENTIAL)

01	02	03	04
Assembly Name	Area (ft²)	Overall U-factor	Status[1]
Metal Door126	88	0.7	N

[1] Status: N - New, A - Altered, E - Existing

G7A. FENESTRATION ASSEMBLY SUMMARY (NONRESIDENTIAL)

01	02	03	04	05	06	07	08	09
Fenestration Assembly Name	Fenestration Type/ Product Type / Frame Type	Certification Method[1]	Assembly Method	Area (ft²)	Overall U-factor	Overall SHGC	Overall VT	Status[2]
(P) Glazed Door	Vertical fenestration Glazed door N/A	NFRC	Manufactured	213	0.45	0.23	0.17	N
PPG Solarban 60 Clear+Clear STF	Vertical fenestration Curtain wall N/A	NFRC	Manufactured	1,455	0.29	0.39	0.7	N
Kalwall 4 (100mm) Panel Skylight	Skylight Fixed window N/A	NFRC	Manufactured	51	0.55	0.38	0.2	N
Kalwall	Vertical fenestration Curtain wall N/A	NFRC	Manufactured	1,078	0.53	0.3	0.23	N

[1] Notes: Newly installed fenestration shall have a certified NFRC Label Certificate or use the CEC default tables found in Table 110.6-A and Table 110.6-B. Center of Glass (COG) values are for the glass-only, determined by the manufacturer, and are shown for ease of verification. Site-built fenestration values are calculated per Nonresidential Appendix NA6 and are used in the analysis.
[2] Status: N - New, A - Altered, E - Existing

H1. DRY SYSTEM EQUIPMENT (FURNACES, AIR HANDLING UNITS, HEAT PUMPS, VRF, ECONOMIZERS ETC.)

01	02	03	04	05	06	07	08	09	10	11	12
Equipment Name	Equipment Type	Qty	Heating				Cooling			Economizer Type (if present)	Status[1]
			Total Heating Output (kBtu/h)	Supp Heat Output (kBtu/h)	Efficiency Unit	Efficiency	Total Cooling Output (kBtu/h)	Efficiency Unit	Efficiency		
PHP_1	Package SZ VAV Heat Pump Air System	1	75	30.71	COP	3.5	78	EER	12.1	Fixed DB	N
PHP_2	Single Zone Heat Pump (SZHP) Air System	1	36	20.47	COP HSPF	3.2 8	39	EER SEER	12.2 14.3	Fixed DB	N
PHP_3	Package SZ VAV Heat Pump Air System	1	92	30.71	COP	3.4	100	EER	11	Fixed DB	N
PHP-4A4B	Package SZ VAV Heat Pump Air System	2	253.88	0	COP	3.5	246.65	EER	10.4	Fixed DB	N
FC-1	Single Zone Heat Pump (SZHP) Air System	1	48	0	COP HSPF2	3.85 8.8	42	EER2 SEER2	10.1 18.7	No Economizer	N
FC-2	Single Zone Heat Pump (SZHP) Air System	1	54	0	COP HSPF	4 11	48	EER SEER	11.3 16.5	No Economizer	N
DS-1 (CONFIRM TENTATIVE E	Single Zone Heat Pump	1	0	0	COP HSPF2	3.85 8.8	36	EER2 SEER2	10.8 19.4	N/A	N

[1] Status: N - New, A - Altered, E - Existing

H3. NONRESIDENTIAL / COMMON USE AREA FAN SYSTEMS SUMMARY

01	02	03	04	05	06	07	08	09	10	11	12	13
Name or Item Tag	Qty	Design OA CFM	Supply Fan				Return / Relief Fan					Status[1]
			CFM	Power	Power Units	Control	Fan Type	CFM	Power	Power Units	Control	
PHP_1	1	301.95	2,400	0.43	BHP	VSD	N/A	N/A	N/A	N/A	N/A	N
PHP_2	1	173.55	1,200	0.34	BHP	Constant Vol	N/A	N/A	N/A	N/A	N/A	N
PHP_3	1	261.15	3,400	0.99	BHP	VSD	N/A	N/A	N/A	N/A	N/A	N
PHP-4A4B	2	2210.75	10,000	3.75	BHP	VSD	N/A	N/A	N/A	N/A	N/A	N
FC-1	1	130.95	1,485	0.49	BHP	Constant Vol	N/A	N/A	N/A	N/A	N/A	N
FC-2	1	162.15	1,485	0.49	BHP	Constant Vol	N/A	N/A	N/A	N/A	N/A	N
DS-1 (CONFIRM TENTATIVE E	1	0	920	0.06	BHP	Constant Vol	N/A	N/A	N/A	N/A	N/A	N

[1] Status: N - New, A - Altered, E - Existing

H5. GENERAL EXHAUST FAN SUMMARY

01	02	03	04	05	06	07	08
System ID	Zone Name	Qty	CFM	Power	Power Units	Continuous Operation?	Status[1]
Toilets public3	1-Toilets public	1	950	0.26	BHP	No	N
General - Unoccupied (IC)45	2-General - Unoccupied (IC)	1	125	0.02	BHP	No	N
Toilets public (UC)177	8-Toilets public (UC)	1	400	0.42	BHP	No	N

[1] Status: N - New, A - Altered, E - Existing

C8. ENERGY USE INTENSITY (EUI)

	Standard Design (kBtu/ft² / yr)	Proposed Design (kBtu/ft² / yr)	Margin (kBtu/ft² / yr)	Margin Percentage
GROSS EUI[1]	55.17	40.15	15.02	27.22
NET EUI[1]	55.17	40.15	15.02	27.22

[1] Notes: Gross EUI is Energy Use Total (not including PV)/Total Building Area. Net EUI is Energy Use Total (including PV)/Total Building Area.

D1. EXCEPTIONAL CONDITIONS

- The project uses the Simplified Geometry Performance Modeling Approach which is not capable of modeling daylighting controls and assumes the prescriptive Secondary Daylit Control requirements are met. PRESCRIPTIVE COMPLIANCE documentation (form NRCC-LTI-02-E) for the requirements of section 140.6(d) Automatic Daylighting Controls in Secondary Daylit Zones is required.
- The proposed building includes HVAC components that do not meet the mandatory efficiency requirements.
- PV/Battery Building Type has been modified from software defaults for one or more spaces. Review project's PV/Battery Building Type(s) with documentation author. Refer to Energy Code section 140.10 for Nonresidential or 170.2(g) for more information.

G1. ENVELOPE GENERAL INFORMATION (conditioned spaces only)

01	02	03	04
Opaque Surfaces & Orientation	Total Gross Surface Area (ft²)	Total Fenestration Area (ft²)	Window to Wall Ratio (%)
North-Facing[1]	4737	586	12.37
East-Facing[2]	6234	779	12.5
South-Facing[3]	4220	705	16.71
West-Facing[4]	5540	676	12.2
Total	**20731**	**2746**	**13.25**

Notes
[1]North-Facing is oriented to within 45 degrees of true north, including 45 00'00" east of north (NE), but excluding 45 00'00" west of north (NW),
[2]East-Facing is oriented to within 45 degrees of true east, including 45 00'00" south of east (SE), but excluding 45 00'00" north of east (NE),
[3]South-Facing is oriented to within 45 degrees of true south, including 45 00'00" west of south (SW), but excluding 45 00'00" east of south (SE),
[4]West-Facing is oriented to within 45 degrees of true west, including 45 00'00" north of west (NW), but excluding 45 00'00" south of west (SW),

G1. ENVELOPE GENERAL INFORMATION (conditioned spaces only)

01	02	03	04
Opaque Surfaces & Orientation	Total Gross Surface Area (ft²)	Total Fenestration Area (ft²)	Window to Wall Ratio (%)
Roof	16010	51	0.32

Notes
[1]North-Facing is oriented to within 45 degrees of true north, including 45 00'00" east of north (NE), but excluding 45 00'00" west of north (NW),
[2]East-Facing is oriented to within 45 degrees of true east, including 45 00'00" south of east (SE), but excluding 45 00'00" north of east (NE),
[3]South-Facing is oriented to within 45 degrees of true south, including 45 00'00" west of south (SW), but excluding 45 00'00" east of south (SE),
[4]West-Facing is oriented to within 45 degrees of true west, including 45 00'00" north of west (NW), but excluding 45 00'00" south of west (SW),

G4. NONRESIDENTIAL AIR BARRIER

01	02
Building Story Name	Air Barrier
Com-Floor 1	No air barrier

G5. OPAQUE SURFACE ASSEMBLY SUMMARY

01	02	03	04	05	06		07	08	09	10
Surface Name	Construction Type	Area (ft²)	Framing Type	Cavity R-Value	Continuous R-Value		Units	Value	Description of Assembly Layers	Status[1]
					Interior	Exterior				
Slab On Grade15	Underground Floor	16,367	N/A	0	N/A	N/A	F-factor	0.73	Slab Type =Unheated slab on grade Insulation Orientation =None Insulation R-Value =none	N
Other Roof Assembly17	Roof	7,524	Wood	38	N/A	N/A	U-factor	0.0294	Single Ply Roofing - 1/4 in. Vapor permeable felt - 1/8 in. Plywood - 1/2 in. Air - Ceiling - 3/4 in. Composite-1 Gypsum Board - 1/2 in.	N
Wall Type A30	Exterior Wall	21,515	Wood	21	N/A	4.5	U-factor	0.0479	Metal Siding - 1/16 in. Compliance Insulation R4.50 Vapor permeable felt - 1/8 in. Plywood - 1/2 in. Composite-2 Gypsum Board - 5/8 in.	N
Gym Roof110	Roof	8,843	Wood	0	N/A	35.21	U-factor	0.0273	Single Ply Roofing - 1/4 in. Cellular polyisocyanurate (unfaced) - 6 in. R35 Plywood - 1/2 in. Composite-3 Metal Deck - 1/16 in.	N
Wall Type E6121	Interior Wall	935	Wood	21	N/A	N/A	U-factor	0.0635	Gypsum Board - 5/8 in. Composite-4 Gypsum Board - 5/8 in.	N

[1] Status: N - New, A - Altered, E - Existing

rrm design group
rrmdesign.com | (805) 543-1794
3765 S. Higuera, San Luis Obispo, CA 93401

THE INCLUDED DRAWINGS, SPECIFICATIONS, IDEAS, DESIGNS AND ARRANGEMENTS REPRESENTED THEREBY ARE AND SHALL REMAIN THE PROPERTY OF RRM DESIGN GROUP AND NO PART THEREOF SHALL BE COPIED, DISCLOSED TO OTHERS OR USED IN CONNECTION WITH ANY WORK OR PROJECT OTHER THAN THE SPECIFIC PROJECT FOR WHICH THEY HAVE BEEN PREPARED AND DEVELOPED WITHOUT THE WRITTEN CONSENT OF RRM DESIGN GROUP. VISUAL CONTACT WITH THESE DRAWINGS OR SPECIFICATIONS SHALL CONSTITUTE CONCLUSIVE EVIDENCE OF ACCEPTANCE OF THESE RESTRICTIONS. THIS DOCUMENT SHALL NOT BE CONSIDERED A WAIVER OF RRM DESIGN GROUP'S RIGHTS.
RRM DESIGN GROUP COPYRIGHT 2021
RRM IS A CALIFORNIA CORPORATION

REGISTERED PROFESSIONAL ENGINEER
BRIAN P. STARKEY
M 34068
EXP. 6/30/24
MECHANICAL
STATE OF CALIFORNIA

CONSULTANT

3C | ENGINEERING
SMARTER BUILDINGS BY DESIGN
805.540.3163 WWW.3CENG.COM
1000 PALM ST. SAN LUIS OBISPO, CA 93401

BY 3C Engineering, Inc., ALL COMMON LAW COPYRIGHT AND OTHER PROPERTY RIGHTS RESERVE THIS DOCUMENT AS AN ORIGINAL AND UNPUBLISHED WORK PRODUCT. THIS WORK SHALL NOT BE DUPLICATED, COPIED, DISCLOSED OR USED IN CONNECTION WITH ANY WORK OR PROJECT OTHER THAN THE SPECIFIC PROJECT FOR WHICH IT AS BEEN PREPARED, NOR SHALL IT BE ASSIGNED TO ANY THIRD PARTY WITHOUT FIRST OBTAINING THE EXPRESS WRITTEN CONSENT OF VISUAL CONTACT. THIS DOCUMENT SHALL CONSTITUTE CONCLUSIVE EVIDENCE OF ACCEPTANCE OF THESE RESTRICTIONS.

AGENCY

100% CONSTRUCTION DOCUMENTS

FOURTH ST COMMUNITY CENTER AND PARK
HENDERSON AVE., PORTERVILLE, CA 93257

ENERGY COMPLIANCE DOCUMENTATION

NO.	REVISION	DATE
1	PLAN CHECK REVISION 1	5/17/24

PROJECT MANAGER: DS
DRAWN BY: BS
CHECKED BY: BS
DATE: 2024.05.17
PROJECT NUMBER: 2883-01-RC22
SHEET: T-241

S:\Shared\Jobs\ENG Projects\Porterville Community Center\Engineering\Porterville Community Center T24.dwg khanjian May 15,2024-12:57pm

CERTIFICATE OF COMPLIANCE - NONRESIDENTIAL PERFORMANCE COMPLIANCE METHOD NRCC-PRF-E

Nonresidential Performance Compliance Method (Page 21 of 23)

L. DECLARATION OF REQUIRED CERTIFICATES OF INSTALLATION

Selections made by Documentation Author indicate which Certificates of Installation must be submitted for the features to be recognized for compliance. These documents must be retained and provided to the building inspector during construction and can be found online

Building Component	Form/Title
Plumbing	NRCI-PLB-01-E - Must be submitted for all buildings
Plumbing	NRCI-PLB-E - For all buildings with Plumbing Systems
Indoor Lighting	NRCI-LTI-01-E - Must be submitted for all buildings
Indoor Lighting	NRCI-LTI-E - Indoor Lighting (for all buildings)

M. DECLARATION OF REQUIRED CERTIFICATES OF ACCEPTANCE

Selections made by Documentation Author indicate which Certificates of Acceptance must be submitted for the features to be recognized for compliance. These documents must be provided to the building inspector during construction and must be completed through an Acceptance Test Technician Certification Provider (ATTCP).

Building Component	Form/Title
Envelope	NRCA-ENV-02-F - NRFC label verification for fenestration
Indoor Lighting	NRCA-LTI-02-A - Occupancy Sensors and Automatic Time Switch Controls.
Indoor Lighting	NRCA-LTI-03-A - Automatic Daylight Controls.
Indoor Lighting	NRCA-LTI-04-A - Demand Responsive Lighting Controls.
Mechanical	NRCA-MCH-02-A - Outdoor Air must be submitted for all newly installed HVAC units. Note: MCH-02-A can be performed in conjunction with MCH-07-A Supply Fan VFD Acceptance (if applicable) since testing activities overlap
Mechanical	NRCA-MCH-03-A - Constant Volume Single Zone HVAC
Mechanical	NRCA-MCH-05-A - Air Economizer Controls
Mechanical	NRCA-MCH-06-A Demand Control Ventilation Systems must be submitted for all systems required to employ demand controlled ventilation (refer to) can vary outside ventilation flow rates based on maintaining interior carbon dioxide (CO2) concentration setpoints.
Mechanical	NRCA-MCH-07-A Supply Fan Variable Flow Controls
Mechanical	NRCA-MCH-12-A FDD for Packaged Direct Expansion Units

N. DECLARATION OF REQUIRED CERTIFICATES OF VERIFICATION

Selections made by Documentation Author indicate which Certificates of Verification must be submitted for the features to be recognized for compliance. These documents must be retained and provided to the building inspector during construction and can be found online

There are no Certificates of Verification applicable to this project

CERTIFICATE OF COMPLIANCE - NONRESIDENTIAL PERFORMANCE COMPLIANCE METHOD NRCC-PRF-E

Nonresidential Performance Compliance Method (Page 22 of 23)

Documentation Author's Declaration Statement

I. I certify that this Certificate of Compliance documentation is accurate and complete.

Documentation Author Name: Danica Resurreccion	Documentation Author Signature:
Company: 3C Engineering, Inc.	Signature Date: 2024-05-10
Address: 1500 Palm St.	CEA/HERS Certification Identification (if applicable):
City/State/Zip: San Luis Obispo, CA 93401	Phone: 805-540-3363

Responsible Person's Declaration statement

I certify the following under penalty of perjury, under the laws of the State of California:

1. The information provided on this Certificate of Compliance is true and correct.
2. I am eligible under Division 3 of the Business and Professions Code to accept responsibility for the building design or system design identified on this Certificate of Compliance (responsible designer)
3. The energy features and performance specifications, materials, components, and manufactured devices for the building design or system design identified on this Certificate of Compliance conform to the requirements of Title 24, Part 1 and Part 6 of the California Code of Regulations.
4. The building design features or system design features identified on this Certificate of Compliance are consistent with the information provided on other applicable compliance documents, worksheets, calculations, plans and specifications submitted to the enforcement agency for approval with this building permit application.
5. I understand that a registered copy of this Certificate of Compliance shall be made available with the building permit(s) issued for the building, and made available to the enforcement agency for all applicable inspections, and I will take the necessary steps to accomplish this requirement.
6. I understand that a registered copy of this Certificate of Compliance is required to be included with the documentation the builder provides to the building owner at occupancy, and I will take the necessary steps to accomplish these requirements.

Responsible Designer Name: Thaddeus Lupton	Responsible Designer Signature:	
Company: RRM Design Group		
Address: 3765 S. Higuera St. Suite 102	Date Signed:	
City/State/Zip: San Luis Obispo, California 93401	License #: C 39678	
Phone: 805-543-1794	Title:Architect	Scope:Envelope Design
Responsible Designer Name: Steven Kirk Eastham	Responsible Designer Signature:	
Company: Rose Sing Eastham & Associates		
Address: 131 S. Dunworth	Date Signed:	
City/State/Zip: Visalia, CA 93292	License #: E 18786	
Phone: 559-733-2671	Title: Electrical Engineer	Scope: Lighting Design

CERTIFICATE OF COMPLIANCE - NONRESIDENTIAL PERFORMANCE COMPLIANCE METHOD NRCC-PRF-E

Nonresidential Performance Compliance Method (Page 23 of 23)

Responsible Designer Name: Brian Starrett	Responsible Designer Signature:	
Company: 3C Engineering, Inc.		
Address: 1500 Palm St.	Date Signed: 2024-05-10	
City/State/Zip: San Luis Obispo, California 93401	License #: M34068	
Phone: 805-540-3363	Title: Mechanical Engineer	Scope: Mechanical Design

CERTIFICATE OF COMPLIANCE - NONRESIDENTIAL PERFORMANCE COMPLIANCE METHOD NRCC-PRF-E

Nonresidential Performance Compliance Method (Page 18 of 23)

K1. INDOOR CONDITIONED LIGHTING GENERAL INFO

01	02	03	04	05	06
Occupancy Type[1]	Conditioned Floor Area[2] (ft^2)	Installed Lighting Power (Watts)	Lighting Control Credits (Watts)	Additional (Custom) Allowance	
				Area Category Footnotes (Watts)	Area Category Footnotes (Watts)
All Other Space Types	482	189	0	0	0
Corridor	515	299	0	0	0
Electrical Mechanical Telephone Room	368	162.4	0	0	0
Exercise Center Gymnasium	928	708	0	0	0
Library - Reading Area	2898	1416	0	0	0
Main Entry Lobby	543	384	0	0	0
Office (250 square feet)	290	128	0	0	0
Office (250 square feet)	424	256	0	0	0
Restroom	631	489	0	0	0
Sports Arena Class I	8843	4585	0	0	0
Unoccupied Include In Gross Floor Area	88	0	0	0	0
Building Totals:	**16010**	**8616.4**	**0**	**0**	**0**

[1]See Table 140.6-C
[2]See NRCC-LTI-E for unconditioned spaces
[3]Lighting information for existing spaces modeled is not included in this table

CERTIFICATE OF COMPLIANCE - NONRESIDENTIAL PERFORMANCE COMPLIANCE METHOD NRCC-PRF-E

Nonresidential Performance Compliance Method (Page 19 of 23)

K2. INDOOR CONDITIONED LIGHTING SCHEDULE

Luminaire Schedule (includes all permanent installed lighting in conditioned space, and portable lighting over 0.3 w/ft^2 in offices)

01	02	03	04	05	06
Name or Item Tag	Complete Luminaire Description (i.e. 3-lamp fluorescent troffer, F32T8, one dimmable electronic ballast)	Installed Watts (Conditioned)			
		Watts per luminaire	How is Wattage determined	Total Number of Luminaires	Installed Watts
EE	EE	25	According to	10	250
E	E	25	According to	10	250
K	K	16	According to	4	64
F12	F12	96	According to	2	192
F12E	F12E	96	According to	3	288
F8	F8	64	According to	7	448
F8E	F8E	64	According to	6	384
F4	F4	32	According to	1	32
F4E	F4E	32	According to	2	64
F16	F16	128	According to	1	128
HE	HE	26	According to	3	78
H	H	26	According to	2	52
G	G	115	According to	2	230
AE	AE	131	According to	20	2620
A	A	131	According to	15	1965
C	C	27	According to	7	189
CE	CE	27	According to	4	108
B	B	32	According to	10	320
BE	BE	32	According to	6	192
J	J	118	According to	3	354

[1]If lighting power densities were used in the compliance model Building Departments will need to check prescriptive forms for Luminaire Schedule details.

CERTIFICATE OF COMPLIANCE - NONRESIDENTIAL PERFORMANCE COMPLIANCE METHOD NRCC-PRF-E

Nonresidential Performance Compliance Method (Page 20 of 23)

K2. INDOOR CONDITIONED LIGHTING SCHEDULE

Luminaire Schedule (includes all permanent installed lighting in conditioned space, and portable lighting over 0.3 w/ft^2 in offices)

01	02	03	04	05	06
Name or Item Tag	Complete Luminaire Description (i.e. 3-lamp fluorescent troffer, F32T8, one dimmable electronic ballast)	Installed Watts (Conditioned)			
		Watts per luminaire	How is Wattage determined	Total Number of Luminaires	Installed Watts
JE	JE	118	According to	3	354

[1]If lighting power densities were used in the compliance model Building Departments will need to check prescriptive forms for Luminaire Schedule details.

K4. INDOOR CONDITIONED LIGHTING MANDATORY LIGHTING CONTROL

Building Level Controls

01	02
Mandatory Demand Response 110.12(c)	Shut-Off Controls 130.1(c) & 160.5(b)4C
Required	NA

Area Level Controls (includes all lighting controls installed in conditioned space to meet mandatory requirements per 130.1)

03	04	05	06	07	08	09
Area Description	Area Category Primary Function Area	Area Controls 130.1(a) & 160.5(b)4A	Multi-Level Controls 130.1(b) & 160.5(b)4B	Shut-Off Controls 130.1(c) & 160.5(b)4C	Primary Daylighting 130.1(d) & 160.5(b)4D	Secondary Daylighting 140.5(d) & 160.5(b)4D
Community Center	All Other Space Types	Required	Required	Required	Required	Required

L. DECLARATION OF REQUIRED CERTIFICATES OF INSTALLATION

Selections made by Documentation Author indicate which Certificates of Installation must be submitted for the features to be recognized for compliance. These documents must be retained and provided to the building inspector during construction and can be found online

Building Component	Form/Title
Envelope	NRCI-ENV-01-E - Must be submitted for all buildings
Envelope	NRCI-ENV-E - Envelope (for all buildings)
Mechanical	NRCI-MCH-01-E - Must be submitted for all buildings
Mechanical	NRCI-MCH-E - For all buildings with Mechanical Systems

rrm design group
rrmdesign.com | (805) 543-1794
3765 S. Higuera, San Luis Obispo, CA 93401

THE INCLUDED DRAWINGS, SPECIFICATIONS, IDEAS, DESIGNS AND ARRANGEMENTS REPRESENTED THEREBY ARE AND SHALL REMAIN THE PROPERTY OF RRM DESIGN GROUP AND NO PART THEREOF SHALL BE COPIED, DISCLOSED TO OTHERS OR USED IN CONNECTION WITH ANY WORK OR PROJECT OTHER THAN THE SPECIFIC PROJECT FOR WHICH THEY HAVE BEEN PREPARED AND DEVELOPED WITHOUT THE WRITTEN CONSENT OF RRM DESIGN GROUP. VISUAL CONTACT WITH THESE DRAWINGS OR SPECIFICATIONS SHALL CONSTITUTE CONCLUSIVE EVIDENCE OF ACCEPTANCE OF THESE RESTRICTIONS. THE SUBMITTAL OF THESE DRAWINGS FOR AGENCY REVIEW SHALL NOT BE CONSIDERED A WAIVER OF RRM DESIGN GROUPS RIGHTS.
RRM DESIGN GROUP COPYRIGHT 2021
RRM IS A CALIFORNIA CORPORATION

REGISTERED PROFESSIONAL ENGINEER
BRIAN P. STARRETT
M 34068
EXP. 6/30/24
MECHANICAL
STATE OF CALIFORNIA

CONSULTANT

3C | ENGINEERING
SMARTER BUILDINGS BY DESIGN
805.540.3363 www.3CENG.COM
1500 PALM ST. SAN LUIS OBISPO, CA 93401

BY 3C Engineering, Inc., ALL COMMON LAW COPYRIGHT AND OTHER PROPERTY RIGHTS RESERVE THIS DOCUMENT AS AN ORIGINAL AND UNPUBLISHED WORK PRODUCT. THIS WORK SHALL NOT BE DUPLICATED, COPIED, DISCLOSED OR USED IN CONNECTION WITH ANY WORK OR PROJECT OTHER THAN THE SPECIFIC PROJECT FOR WHICH IT AS BEEN PREPARED, NOR SHALL IT BE ASSIGNED TO ANY THIRD PARTY WITHOUT FIRST OBTAINING THE EXPRESS WRITTEN CONSENT OF VISUAL CONTACT. THIS DOCUMENT SHALL CONSTITUTE CONCLUSIVE EVIDENCE OF ACCEPTANCE OF THESE RESTRICTIONS.

AGENCY

100% CONSTRUCTION DOCUMENTS

FOURTH ST COMMUNITY CENTER AND PARK

HENDERSON AVE., PORTERVILLE, CA 93257

ENERGY COMPLIANCE DOCUMENTATION

NO.	REVISION	DATE
1	PLAN CHECK REVISION 1	5/17/24

PROJECT MANAGER DS
DRAWN BY BS
CHECKED BY BS
DATE 2024.05.17
PROJECT NUMBER 2883-01-RC22
SHEET T-242

S:\Shared\Jobs\ENG Projects\Porterville Community Center\Engineering\Porterville Community Center_T24.dwg kbanijev May 15,2024-12:57pm

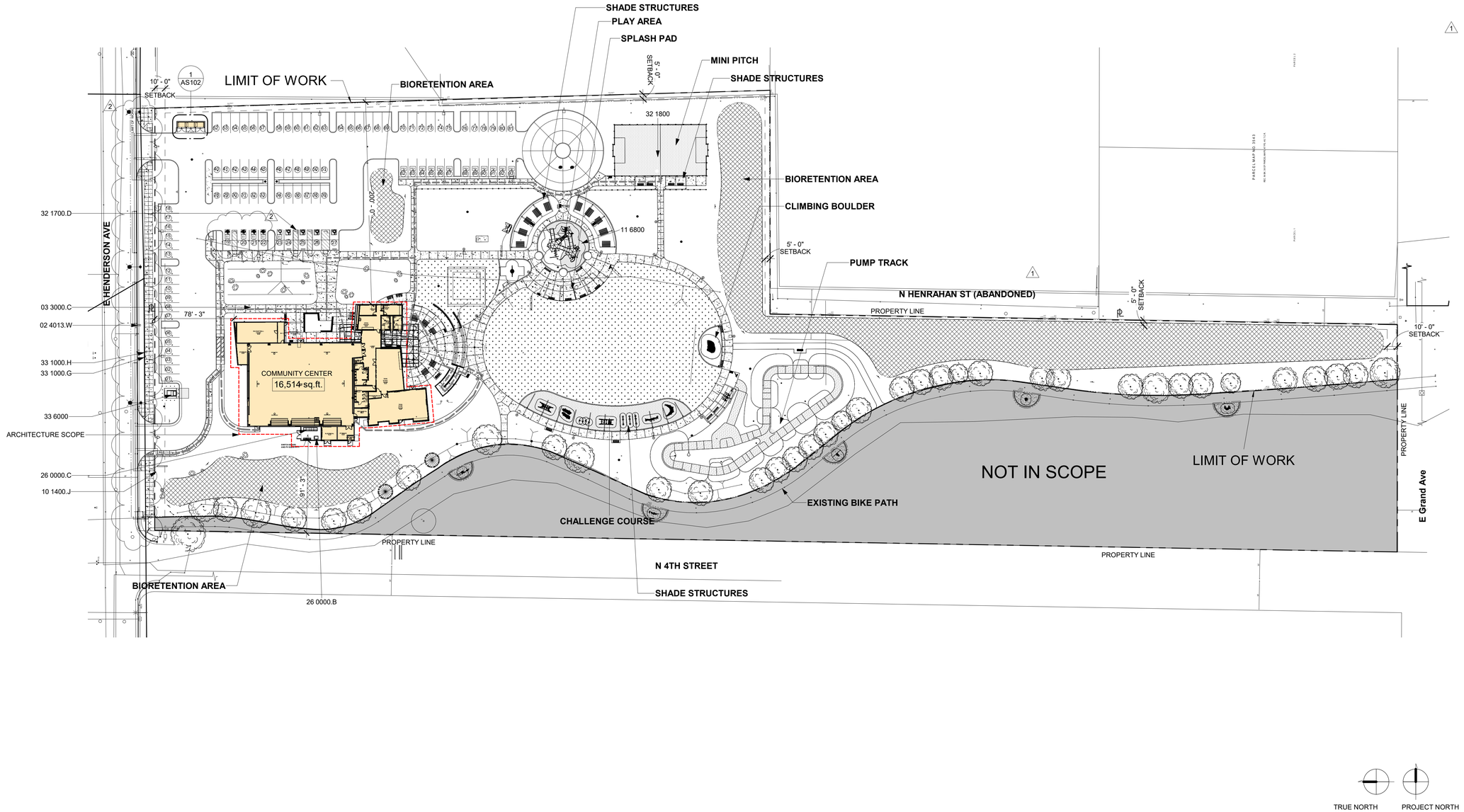

1 ARCHITECTURAL SITE PLAN

A201 | AS101 SCALE: 1" = 50'-0"

PARKING CALCULATIONS

PARKING		
TYPE	SPACES REQUIRED	SPACES PROVIDED
ACCESSIBLE PARKING	4	4
EV PARKING SPACES	4	5
REGULAR PARKING SPACES	84	84
TOTAL PARKING SPACES	93	93
*FUTURE EV	17	17

KEYNOTES

02 4013.W	EXISTING WATER BOX ACCESS TO REMAIN
03 3000.C	NEW CONCRETE WALK.
10 1400.J	MONUMENT SIGNAGE PER LANDSCAPE
11 6800	PLAY FIELD EQUIPMENT AND STRUCTURES
26 0000.B	ELECTRICAL PANEL. REFER TO ELECTRICAL
26 0000.C	ELECTRICAL MAIN SWITCH BOARD. REFER TO ELECTRICAL
32 1700.D	ACCESSIBLE PARKING SPACE STRIPING
32 1800	ATHLETIC AND RECREATIONAL SURFACING
33 1000.G	(E) FIRE HYDRANT TO REMAIN
33 1000.H	FIRE SERVICE PER RECORD DRAWINGS
33 6000	S.C.E. UTILITY TRANSFORMER. REFER TO ELECTRICAL

SITE PLAN GENERAL NOTES

1. REFER TO GENERAL NOTES SHEET G-101 FOR ADDITIONAL REQUIREMENTS
2. REFER TO CIVIL PLANS FOR FURTHER INFORMATION.
3. REFER TO LANDSCAPE PLANS FOR FURTHER INFORMATION.
4. REFER TO STRUCTURAL PLANS FOR FURTHER IINFORMATION.
5. REFER TO MECHANICAL PLANS FOR FURTHER INFORMATION.
6. REFER TO ELECTRICAL PLANS FOR FURTHER IINFORMATION.
7. REFER TO PLUMBING PLANS FOR FURTHER INFORMATION.
8. ALL SIDEWALKS, CROSSWALKS, COMMON AREAS AND BUILDING ENTRANCES SHALL BE ACCESSIBLE AND IN COMPLIANCE WITH ***2022 CBC 11B***.
   A. FLOOR AND GROUND SURFACES SHALL BE STABLE, FIRM, AND SLIP RESISTANT.
   B. OPENINGS IN FLOOR OR GROUND SURFACES SHALL NOT ALLOW PASSAGE OF A SPHERE <1/2".
   C. VERTICAL CHANGES IN LEVEL SHALL NOT EXCEED 1/4".
   D. THE CLEAR WIDTH FOR SIDEWALKS AND WALKS SHALL BE 48" MIN.
9. ALL CURBING NOT WITHIN A PARKING SPACE SHALL BE PAINTED RED TO DESIGNATE THE FIRE LANES
10. CONTRACTOR TO REVIEW LANDSCAPE PLANS TO AVOID CONFLICTS BETWEEN PLANTINGS AND UTILITIES, I.E. METER LOCATIONS, ELECTRIC TRANSFORMER, BACKFLOW PREVENTERS, SEWER LINES AND ELECTRIC CONDUIT (POLE LIGHTING AT DRIVEWAY), ETC.

SITE PLAN LEGEND

- PROPERTY LINE
- SETBACK
- EASEMENT
- ACCESSIBLE PATH OF TRAVEL (SHALL BE 48" MIN. CBC 11B-403.5)
- BIORETENTION
- ARCHITECTURE SCOPE
- CONCRETE PAVING REFER TO CIVIL DRAWING
- LANDSCAPE AREA, REFER TO LANDSCAPE DRAWINGS.
- STANDARD ACCESSIBLE STALL
- VAN — VAN ACCESSIBLE STALL
- EV — ELECTRICAL VEHICLE CHARGING STALL
- FEV — FUTURE ELECTRICAL VEHICLE CHARGING STALL

rrm design group
rrmdesign.com | (805) 543-1794
3765 SOUTH HIGUERA STREET SUITE 102
SAN LUIS OBISPO, CA 93401

THE INCLUDED DRAWINGS, SPECIFICATIONS, IDEAS, DESIGNS AND ARRANGEMENTS REPRESENTED THEREBY ARE AND SHALL REMAIN THE PROPERTY OF RRM DESIGN GROUP AND NO PART THEREOF SHALL BE COPIED, DISCLOSED TO OTHERS OR SUBSTANTIALLY USED FOR ANY PURPOSE WITHOUT THE PRIOR WRITTEN CONSENT OF RRM DESIGN GROUP. THERE IS NO INTENTION TO DEDICATE TO THE PUBLIC THE PROJECT FOR WHICH THEY HAVE BEEN PREPARED AND DEVELOPED WITHOUT THE WRITTEN CONSENT OF RRM DESIGN GROUP. VISUAL CONTACT WITH THESE DRAWINGS OR SPECIFICATIONS SHALL CONSTITUTE CONCLUSIVE EVIDENCE OF ACCEPTANCE OF THESE RESTRICTIONS. SUBMITTAL OF THESE DRAWINGS TO AUTHORITIES OF REVIEW SHALL NOT BE CONSTRUED AS A WAIVER OF RRM DESIGN GROUP'S RIGHTS.
RRM DESIGN GROUP COPYRIGHT 2022
RRM IS A CALIFORNIA CORPORATION

LICENSED ARCHITECT
MICHELLE SCOTT LUCAS
C39678
10-31-25
RENEWAL DATE
STATE OF CALIFORNIA

CONSULTANT

AGENCY

FOURTH ST COMMUNITY CENTER AND PARK

HENDERSON AVE., PORTERVILLE, CA 93257

ARCHITECTURAL SITE PLAN

NO.	REVISION	DATE
1	PLAN CHECK REVISION 1	05/17/24
2	PLAN CHECK REVISION 2	09/17/24

PLAN CHECK REVISION 2

PROJECT MANAGER TSL
DRAWN BY MC, NA, PM
CHECKED BY DD, KF
DATE 2024.09.17
PROJECT NUMBER 2883-01-RC22
SHEET AS101

9/20/2024 11:04:02 AM
Autodesk Docs://2883-01_Portenville Fourth St Community Center/2883-01-RC22_Porterville_v22.rvt

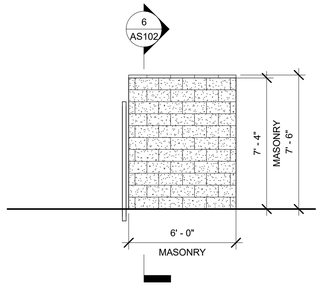

3 TRASH ENCLOSURE - EAST

AS102 | AS102 SCALE: 1/4" = 1'-0"

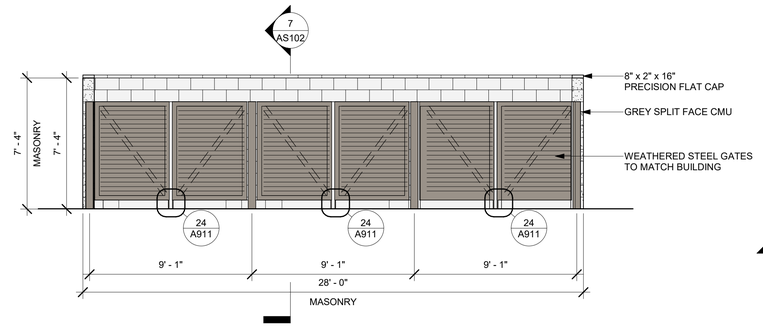

2 TRASH ENCLOSURE - SOUTH

AS102 | AS102 SCALE: 1/4" = 1'-0"

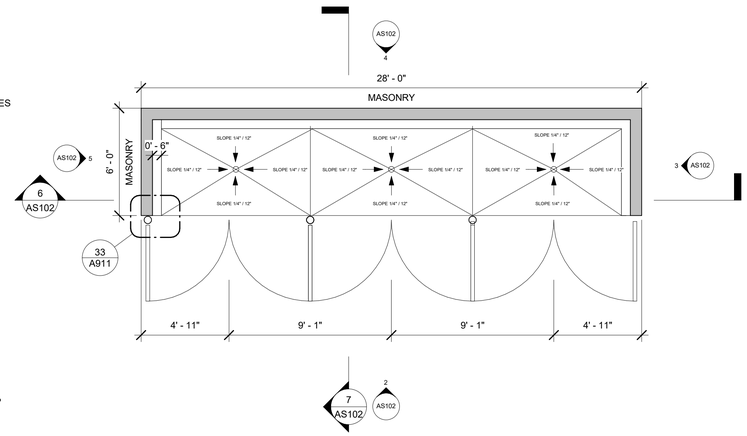

1 TRASH ENCLOSURE

AS101 | AS102 SCALE: 1/4" = 1'-0"

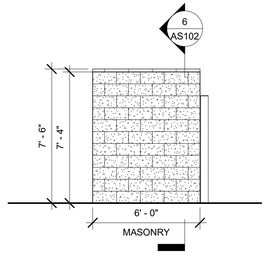

5 TRASH ENCLOSURE - WEST

AS102 | AS102 SCALE: 1/4" = 1'-0"

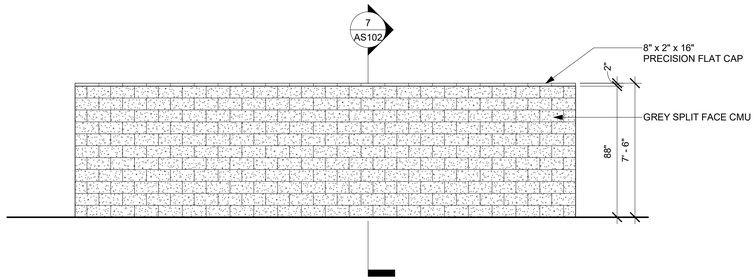

4 TRASH ENCLOSURE - NORTH

AS102 | AS102 SCALE: 1/4" = 1'-0"

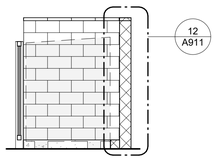

7 TRASH ENCLOSURE - SECTION 02

AS102 | AS102 SCALE: 1/4" = 1'-0"

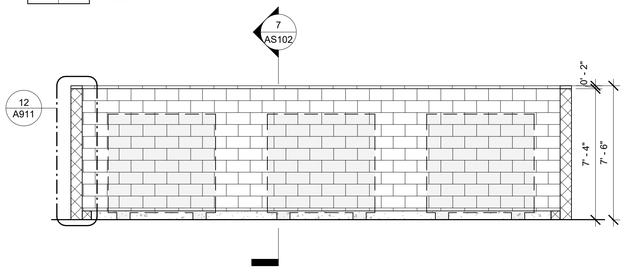

6 TRASH ENCLOSURE - SECTION 01

AS102 | AS102 SCALE: 1/4" = 1'-0"

SECTIONS GENERAL NOTES

1. THE PURPOSE OF THESE DRAWINGS IS TO SHOW CONSTRUCTION MATERIALSS/ASSEMBLIES. FOR SPECIFIC SIZES AND DETAILS REFER TO ARCHITECTURAL PLANS, ELEVATIONS, DETAILS, AND STRUCTURAL PLANS.
2. INSULATION: REFER TO TITLE 24 REPORT AND "INSULATION" NOTES ON SHEET FOR ADDITIONAL RATINGS, REQUIREMENTS, AND INFORMATION.
3. REFER TO FIREBLOCKING/DRAFTSTOPING NOTES ON SHEET G-101.
4. WOOD SHALL BE PROTECTED FROM DECAY AND TERMITES AS REQUIRED PER ***2022 CBC SECTION 2304.12***
5. FOUNDATION SILLS TO BE NATURALLY DURABLE OR PRESERVATIVE-TREATED WOOD. ***2022 CBC SECTION 2304.12.2***
6. PENETRATIONS OF FIRE-RESISTIVE WALLS, FLOOR-CEILIINGS SHALL BE PROTECTED AS REQUIRED PER ***2022 CBC SECTIONS 714.3 & 714.4.***
7. WALL ASSEMBLIES TO BE PER FLOOR PLAN.
8. DOORS, WINDOWS AND STOREFRONT SYSTEMS TO BE PER APPLICABLE SCHEDULE. REFER TO FLOOR PLANS FOR IDENTIFICATION.

ELEVATION GENERAL NOTES

1. REFER TO GENERAL NOTES SHEET G-101 FOR ADDITIONAL REQUIREMENTS.
2. FRAMING ELEVATIONS, INCLUDING FLOOR PLATES AND FLOOR LEVEL ELEVATIONS ARE MEASURED FROM BUILDING FINISH FLOOR, U.N.O.
3. SEE DETAILS FOR ADDITIONAL INFORMATION AND REQUIREMENTS.
4. REFER TO ROOF PLAN FOR ROOF PITCH AND OVERHANGS. FASCIA PER DETAILS.
5. SEE ROOF PLAN FOR APPROXIMATE DOWNSPOUT LOCATIONS, U.N.O.
6. REFER TO DOOR AND WINDOW SCHEDULES AND TYPES FOR DOOR AND WINDOW INFORMATION.
7. SEE ELECTRICAL DRAWINGS FOR EXTERIOR LIGHTING
8. SEE MECHANICAL DRAWINGS FOR GRILLES AND LOUVERS. PAINT TO MATCH ADJACENT FINISH.
9. CONTRACTOR TO VERIFY COLOR SCHEME WITH OWNER BEFORE PERFORMING THE WORK.
10. BACKLIT SIGNAGE UNDER SEPARATE PERMIT. PROVIDE SHOP DRAWINGS FOR ARCHITECT REVIEW PRIOR TO SUBMITTAL.

FLOOR PLAN GENERAL NOTES

1. REFER TO GENERAL NOTES SHEET G-101 FOR ADDITIONAL REQUIREMENTS.
2. REFER TO SHEET A921 FOR WALL TYPES
3. REFER TO STRUCTURAL PLANS FOR FURTHER INFORMATION.
4. REFER TO ELECTRICAL PLANS FOR FURTHER INFORMATION IF PROVIDED.
5. REFER TO MECHANICAL PLANS, DRAWINGS OR REPORTS FOR FURTHER INFORMATION.
6. REFER TO PLUMBING PLANS OR DRAWINGS FOR FURTHER INFORMATION IF PROVIDED.
7. ALL FURNITURE AND EQUIPMENT IS BY OWNER AND IS SHOWN FOR COORDINATION PURPOSES ONLY.
8. ALL CASEWORK SHALL BE PROVIDED BY CONTRACTOR
9. INTERIOR WALL DIMENSIONS ARE TO FACE OF FRAMING UNLESS SPECIFICALLY NOTED OTHERWISE.
10. EXTERIOR DIMENSIONS ARE TO FACE OF SHEATHING UNLESS SPECIFICALLY NOTED OTHERWISE
11. PROVIDE ADEQUATE BLOCKING IN WALLS FOR CABINETS AND OTHER WALL MOUNTED ACCESSORIES INCLUDING BUT NOT LIMITED TO HANDRAILS, SHELVING AND BATHROOM FIXTURES.
12. PROVIDE FIREBLOCKING FOR WALL CAVITIES THAT EXCEED **2022 CBC** HEIGHT LIMITATIONS
13. DOOR AND WINDOW DIMENSIONS ARE CENTERED AT OPENINGS
14. WHERE DOOR IS LOCATED WITHOUT DIMENSION AT THE CORNER OF A ROOM IT SHALL BE 4" FROM FACE OF FRAMING OF ADJACENT WALL TO ROUGH DOOR OPENING
15. SEE CODE ANALYSIS FOR LOCATIONS OF FIRE PARTITIONS AND FIRE BARRIERS
16. WHERE RECESSED FIXTURES OCCUR IN WALLS OR HORIZONTAL ASSEMBLIES, THE FIRE RATING OF THOSE ASSEMBLIES SHALL BE MAINTAINED
17. AT ALL PENETRATIONS AND INTERSECTIONS OF FIRE-RATED PARTITIONS, PROVIDE FIRE SEALANT AND/OR FIRE STOPPING TO MAINTAIN CONTINUITY OF PARTITION RATING

rrm design group
rrmdesign.com | (805) 543-1794
3765 SOUTH HIGUERA STREET SUITE 102
SAN LUIS OBISPO, CA 93401

THE INCLUDED DRAWINGS, SPECIFICATIONS, IDEAS, DESIGNS AND ARRANGEMENTS REPRESENTED THEREBY ARE AND SHALL REMAIN THE PROPERTY OF RRM DESIGN GROUP AND NO PART THEREOF SHALL BE COPIED, DISCLOSED TO OTHERS OR USED IN CONNECTION WITH ANY WORK OR PROJECT OTHER THAN THE SPECIFIED PROJECT FOR WHICH THEY HAVE BEEN PREPARED AND DEVELOPED WITHOUT THE WRITTEN CONSENT OF RRM DESIGN GROUP. VISUAL CONTACT WITH THESE DRAWINGS OR SPECIFICATIONS SHALL CONSTITUTE CONCLUSIVE EVIDENCE OF ACCEPTANCE OF THESE RESTRICTIONS. SUBMITTAL OF PRELIMINARY DRAWINGS FOR REVIEW SHALL NOT BE CONSIDERED AS A WAIVER OF RRM DESIGN GROUP'S RIGHTS.
RRM DESIGN GROUP COPYRIGHT 2022
RRM IS A CALIFORNIA CORPORATION

LICENSED ARCHITECT
MICHELLE SCOTT LUCAS
C39678
10-31-25
RENEWAL DATE
STATE OF CALIFORNIA

CONSULTANT

AGENCY

FOURTH ST COMMUNITY CENTER AND PARK
HENDERSON AVE., PORTERVILLE, CA 93257

ENLARGED SITE PLANS

NO.	REVISION	DATE
△		
△		
△		
△		
△		
△		

PROJECT MANAGER
TSL
DRAWN BY MC, NA, PM
CHECKED BY DD, KF
DATE
2024.09.17
PROJECT NUMBER
2883-01-RC22
SHEET
AS102

PLAN CHECK REVISION 2

9/20/2024 11:04:03 AM
Autodesk Docs://2883-01_Porterville Fourth St Community Center/2883-01-RC22_Porterville_v22.rvt

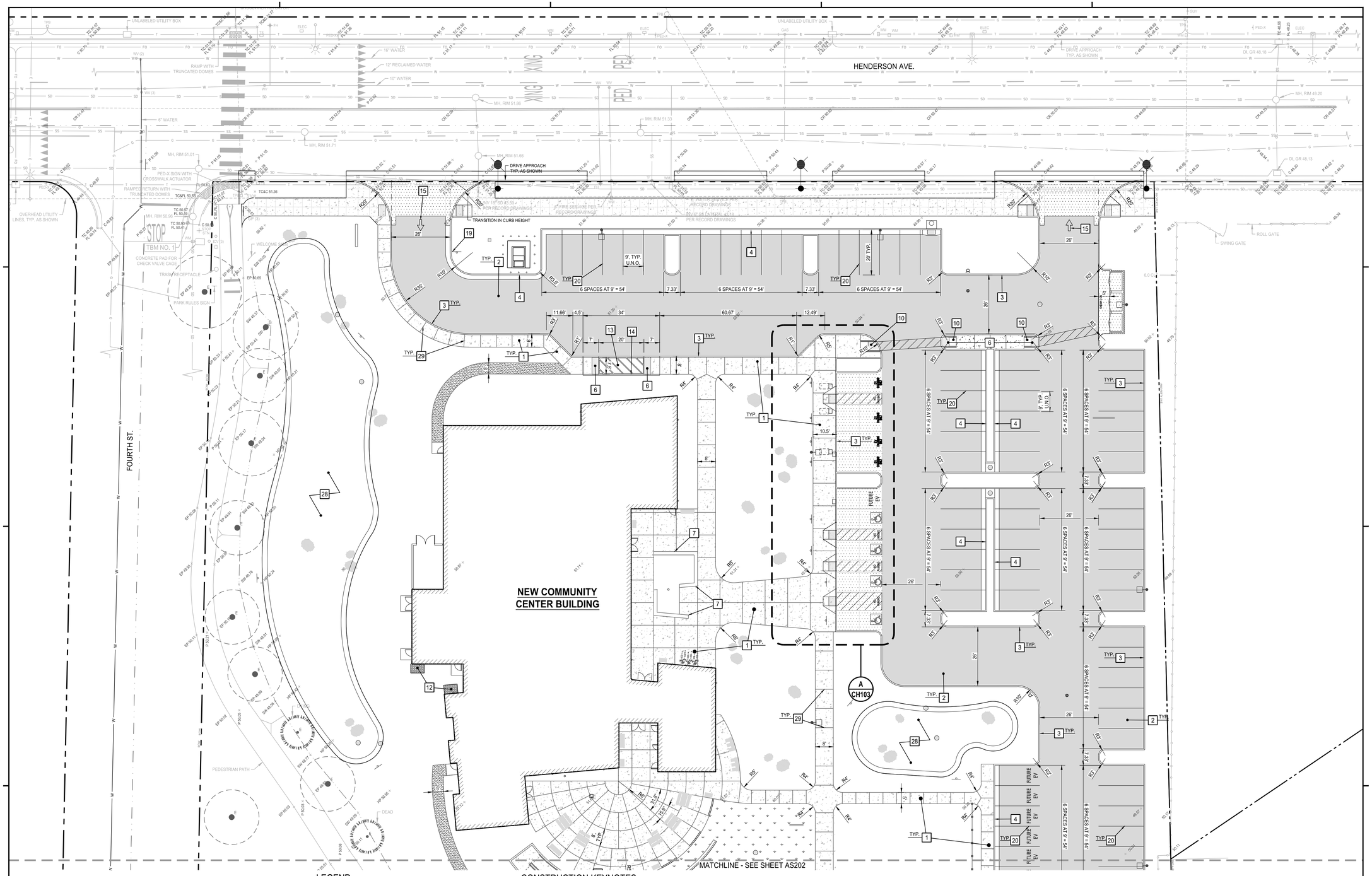

LEGEND

- NEW CONCRETE SIDEWALK, FLATWORK AND MISCELLANEOUS CONCRETE
- NEW CONCRETE PAVEMENT
- NEW ASPHALT PAVEMENT
- PROPERTY BOUNDARY

CONSTRUCTION KEYNOTES

1. CONSTRUCT 4" THICK CONCRETE WALK WITH THICKENED EDGES, SEE DETAIL 24/AS701.
2. CONSTRUCT ASPHALT CONCRETE PAVEMENT, SEE PAVING PLANS SHEET CS101 - CS103.
3. CONSTRUCT CONCRETE BARRIER CURB. SEE DETAIL 12/AS701.
4. CONSTRUCT CONCRETE CURB & GUTTER CURB. SEE DETAIL 41/AS701.
5. CONSTRUCT ACCESSIBILITY RAMP. SEE DETAIL 12/AS702.
6. FURNISH & INSTALL DETECTABLE WARNING SURFACE, SEE DETAIL 13/AS702.
7. CONCRETE SEAT WALL, SEE LANDSCAPE CONSTRUCTION DWGS.
8. CONCRETE RAMP WALL, SEE LANDSCAPE CONSTRUCTION DWGS.
9. CONSTRUCT CONCRETE STEPS, SEE LANDSCAPE CONSTRUCTION DWGS.
10. CONSTRUCT ACCESSIBILITY RAMP. SEE DETAIL 14/AS702.
11. CONSTRUCT HANDRAILS, SEE LANDSCAPE CONSTRUCTION DWGS.
12. FURNISH & INSTALL ENERGY DISSIPATION DEVICE FOR ROOF DOWNSPOUTS. SEE DETAIL 13/AS703
13. CONSTRUCT PASSENGER DROP-OFF & LOADING ZONE. SEE DETAIL 33/AS702.
14. CONSTRUCT CONCRETE RAMP RETAINING CURB, SEE DETAIL 34/AS702.
15. INSTALL DIRECTIONAL PAVEMENT ARROW. SEE DETAIL 44/AS702.
16. INSTALL ACCESSIBLE PARKING EMBLEM MARKING. SEE DETAIL 31/AS702.
17. FURNISH & INSTALL ACCESSIBLE PARKING SIGN INCLUDING POST AND FOOTINGS. SEE DETAIL 32/AS702 (SIGN A)
18. FURNISH & INSTALL "VAN ACCESSIBLE" PARKING SIGN INCLUDING POST AND FOOTINGS. SEE DETAIL 32/AS702 (SIGN B).
19. FURNISH & INSTALL "UNAUTHORIZED" VEHICLE SIGN INCLUDING POST AND FOOTINGS. SEE DETAIL 42/AS702.
20. FURNISH & INSTALL 4" WIDE WHITE PARKING STRIPES, TYP., U.N.O.
21. FURNISH & INSTALL 4" WIDE BLUE PARKING STRIPE.
22. NEW ACCESS AISLE WITH "NO PARKING" MARKING IN WHITE COLOR. "NO PARKING" LETTERS SHALL BE 12" MINIMUM IN HEIGHT. DIAGONAL CROSS HATCH PATTERN SHALL BE WHITE PAINT 4" WIDE SPACED AT 36" O.C. MAX.
23. FURNISH & INSTALL 4" WIDE GREEN PARKING STRIPE FOR ELECTRIC VEHICLE PARKING SPACES.
24. FURNISH & INSTALL ELECTRIC VEHICLE CHARGING ONLY SIGN. PROVIDE ALL SIGN HARDWARE, POST & FOOTING FOR COMPLETE INSTALLATION. SEE DETAIL 14/AS703
25. FURNISH & INSTALL ELECTRIC VEHICLE CHARGING ONLY SIGN WITH ISA EMBLEM & VAN ACCESSIBLE. PROVIDE ALL SIGN HARDWARE, POST & FOOTING FOR COMPLETE INSTALLATION. SEE DETAIL 24/AS703.
26. FURNISH & INSTALL ELECTRIC VEHICLE CHARGING ONLY SIGN WITH ISA EMBLEM. PROVIDE ALL SIGN HARDWARE, POST & FOOTING FOR COMPLETE INSTALLATION. SEE DETAIL 31/AS703.
27. FURNISH & INSTALL 4" WIDE WHITE MARKING "EV CHARGING ONLY" AT ELECTRIC VEHICLE PARKING SPACES PER MUTCD FIG. 3B-108(CA). SEE DETAIL 32/AS703.
28. BIO RETENTION AREA, SEE DETAIL 34/AS703.
29. CONCRETE JOINTS, SEE DETAIL 24/AS701.

NORTH

GRAPHIC SCALE

20 0 10 20 40

1 INCH = 20 FT.

rrm design group
rrmdesign.com | (805) 543-1794
3765 SOUTH HIGUERA STREET, SUITE 102
SAN LUIS OBISPO, CA 93401

THE INCLUDED DRAWINGS, SPECIFICATIONS, IDEAS, DESIGNS AND ARRANGEMENTS REPRESENTED THEREIN ARE AND SHALL REMAIN THE PROPERTY OF RRM DESIGN GROUP AND NO PART THEREOF SHALL BE COPIED, DISCLOSED TO OTHERS OR USED IN CONNECTION WITH ANY WORK OR PROJECT OTHER THAN THE SPECIFIED PROJECT FOR WHICH THEY HAVE BEEN PREPARED AND DEVELOPED WITHOUT THE WRITTEN CONSENT OF RRM DESIGN GROUP. VISUAL CONTACT WITH THESE DRAWINGS AND SPECIFICATIONS SHALL CONSTITUTE PROOF OF ACCEPTANCE OF THE ABOVE RESTRICTIONS. SUBMITTAL OF THESE DOCUMENTS FOR PUBLIC AGENCY REVIEW SHALL NOT BE CONSIDERED A WAIVER OF RRM DESIGN GROUP'S RIGHTS.
RRM DESIGN GROUP COPYRIGHT 2023.
RRM IS A CALIFORNIA CORPORATION

REGISTERED PROFESSIONAL ENGINEER
WA VANG
No. RCE 86967
08/30/2024
CIVIL
STATE OF CALIFORNIA

CONSULTANT

AGENCY

FOURTH ST COMMUNITY CENTER AND PARK

HENDERSON AVE., PORTERVILLE, CA 93257

SITE DIMENSION AND HORIZONTAL CONTROL PLAN

NO.	REVISION	DATE
1	PLAN CHEK REVISION 1	5/17/24

PLAN CHECK REVISION 1

PROJECT MANAGER: LANCE WIERSCHEM
DRAWN BY: W.V.
CHECKED BY: A.P.O.
DATE: 2024.01.15
PROJECT NUMBER: 2883-01-RC22
SHEET: AS201

LANE PROJECT NO. 22306

J:\Jobs\2022\22306\Dwg\Production Drawings\C2_Site Dimension Plan.dwg, AS201, Aug 30, 2024 1:06pm, wa

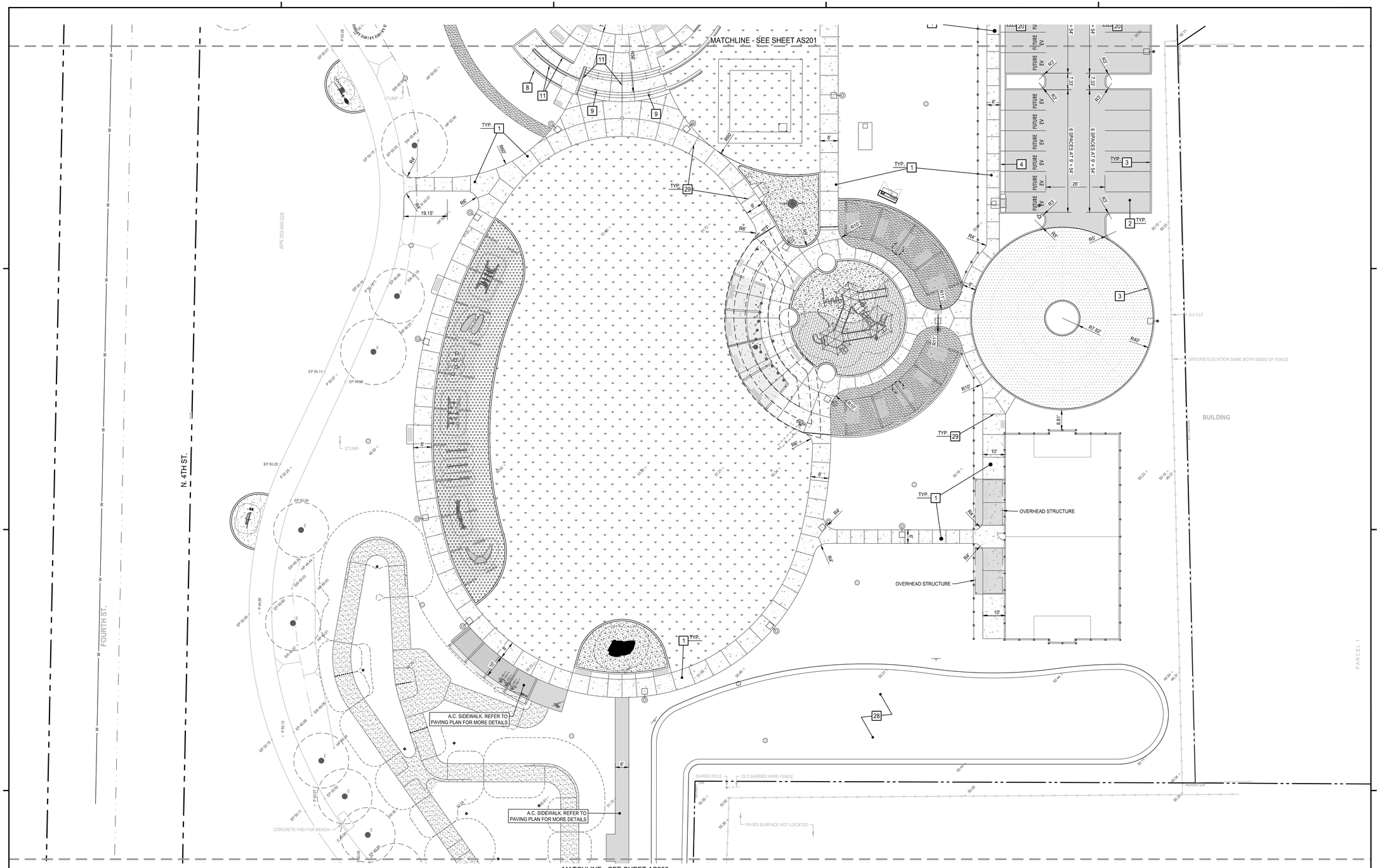

LEGEND

- NEW CONCRETE SIDEWALK, FLATWORK AND MISCELLANEOUS CONCRETE
- NEW CONCRETE PAVEMENT
- NEW ASPHALT PAVEMENT
- PROPERTY BOUNDARY

CONSTRUCTION KEYNOTES

(SHEETS AS201 - AS203 ONLY)

1. CONSTRUCT 4" THICK CONCRETE WALK WITH THICKENED EDGES, SEE DETAIL 24/AS701.
2. CONSTRUCT ASPHALT CONCRETE PAVEMENT, SEE PAVING PLANS SHEET CS101 - CS103.
3. CONSTRUCT CONCRETE BARRIER CURB. SEE DETAIL 12/AS701.
4. CONSTRUCT CONCRETE CURB & GUTTER CURB. SEE DETAIL 41/AS701.
5. CONSTRUCT ACCESSIBILITY RAMP. SEE DETAIL 12/AS702.
6. FURNISH & INSTALL DETECTABLE WARNING SURFACE, SEE DETAIL 13/AS702.
7. CONCRETE SEAT WALL, SEE LANDSCAPE CONSTRUCTION DWGS.
8. CONCRETE RAMP WALL, SEE LANDSCAPE CONSTRUCTION DWGS.
9. CONSTRUCT CONCRETE STEPS, SEE LANDSCAPE CONSTRUCTION DWGS.
10. CONSTRUCT ACCESSIBILITY RAMP, SEE DETAIL 14/AS702.
11. CONSTRUCT HANDRAILS, SEE LANDSCAPE CONSTRUCTION DWGS.
12. FURNISH & INSTALL ENERGY DISSIPATION DEVICE FOR ROOF DOWNSPOUTS. SEE DETAIL 13/AS703
13. CONSTRUCT PASSENGER DROP-OFF & LOADING ZONE. SEE DETAIL 33/AS702.
14. CONSTRUCT CONCRETE RAMP RETAINING CURB, SEE DETAIL 34/AS702.
15. INSTALL DIRECTIONAL PAVEMENT ARROW. SEE DETAIL 44/AS702.
16. INSTALL ACCESSIBLE PARKING EMBLEM MARKING. SEE DETAIL 31/AS702.
17. FURNISH & INSTALL ACCESSIBLE PARKING SIGN INCLUDING POST AND FOOTINGS. SEE DETAIL 32/AS702 (SIGN A)
18. FURNISH & INSTALL "VAN ACCESSIBLE" PARKING SIGN INCLUDING POST AND FOOTINGS. SEE DETAIL 32/AS702 (SIGN B).
19. FURNISH & INSTALL "UNAUTHORIZED" VEHICLE SIGN INCLUDING POST AND FOOTINGS. SEE DETAIL 42/AS702.
20. FURNISH & INSTALL 4" WIDE WHITE PARKING STRIPES, TYP., U.N.O.
21. FURNISH & INSTALL 4" WIDE BLUE PARKING STRIPE.
22. NEW ACCESS AISLE WITH "NO PARKING" MARKING IN WHITE COLOR. "NO PARKING" LETTERS SHALL BE 12" MINIMUM IN HEIGHT. DIAGONAL CROSS HATCH PATTERN SHALL BE WHITE PAINT 4" WIDE SPACED AT 36" O.C. MAX.
23. FURNISH & INSTALL 4" WIDE GREEN PARKING STRIPE FOR ELECTRIC VEHICLE PARKING SPACES.
24. FURNISH & INSTALL ELECTRIC VEHICLE CHARGING ONLY SIGN. PROVIDE ALL SIGN HARDWARE, POST & FOOTING FOR COMPLETE INSTALLATION. SEE DETAIL 14/AS703
25. FURNISH & INSTALL ELECTRIC VEHICLE CHARGING ONLY SIGN WITH ISA EMBLEM & VAN ACCESSIBLE. PROVIDE ALL SIGN HARDWARE, POST & FOOTING FOR COMPLETE INSTALLATION. SEE DETAIL 24/AS703.
26. FURNISH & INSTALL ELECTRIC VEHICLE CHARGING ONLY SIGN WITH ISA EMBLEM. PROVIDE ALL SIGN HARDWARE, POST & FOOTING FOR COMPLETE INSTALLATION. SEE DETAIL 31/AS703.
27. FURNISH & INSTALL 4" WIDE WHITE MARKING "EV CHARGING ONLY" AT ELECTRIC VEHICLE PARKING SPACES PER MUTCD FIG. 3B-108(CA). SEE DETAIL 32/AS703.
28. BIO RETENTION AREA, SEE DETAIL 34/AS703.
29. CONCRETE JOINTS, SEE DETAIL 24/AS701.

NORTH

GRAPHIC SCALE

20 0 10 20 40

1 INCH = 20 FT.

rrm design group
rrmdesign.com | (805) 543-1794
3765 SOUTH HIGUERA STREET, SUITE 102
SAN LUIS OBISPO, CA 93401

THE INCLUDED DRAWINGS, SPECIFICATIONS, IDEAS, DESIGNS AND ARRANGEMENTS REPRESENTED THEREBY ARE AND SHALL REMAIN THE PROPERTY OF RRM DESIGN GROUP AND NO PART THEREOF SHALL BE COPIED, DISCLOSED TO OTHERS OR USED IN CONNECTION WITH ANY WORK OR PROJECT OTHER THAN THE SPECIFIC PROJECT FOR WHICH THEY HAVE BEEN PREPARED AND DEVELOPED WITHOUT THE WRITTEN CONSENT OF RRM DESIGN GROUP. VISUAL CONTACT WITH THESE DRAWINGS AND SPECIFICATIONS SHALL CONSTITUTE PROOF OF ACCEPTANCE OF THE ABOVE RESTRICTIONS. SUBMITTAL OF THESE DOCUMENTS FOR PUBLIC AGENCY REVIEW SHALL NOT BE CONSIDERED A WAIVER OF RRM DESIGN GROUP'S RIGHTS.
RRM DESIGN GROUP COPYRIGHT 2023.
RRM IS A CALIFORNIA CORPORATION

REGISTERED PROFESSIONAL ENGINEER
WA VANG
No. C 80967
08/30/2024
CIVIL
STATE OF CALIFORNIA

CONSULTANT

AGENCY

FOURTH ST COMMUNITY CENTER AND PARK

HENDERSON AVE., PORTERVILLE, CA 93257

SITE DIMENSION AND HORIZONTAL CONTROL PLAN

NO.	REVISION	DATE
1	PLAN CHEK REVISION 1	5/17/24

PLAN CHECK REVISION 1

PROJECT MANAGER: LANCE WIERSCHEM
DRAWN BY: W.V.
CHECKED BY: A.P.O.
DATE: 2024.01.15
PROJECT NUMBER: 2883-01-RC22
SHEET: AS202

LANE PROJECT NO. 22306

J:\Jobs\2022\22306\Dwg\Production Drawings\C2_Site Dimension Plan.dwg, AS202, Aug 30, 2024 1:06pm, wa

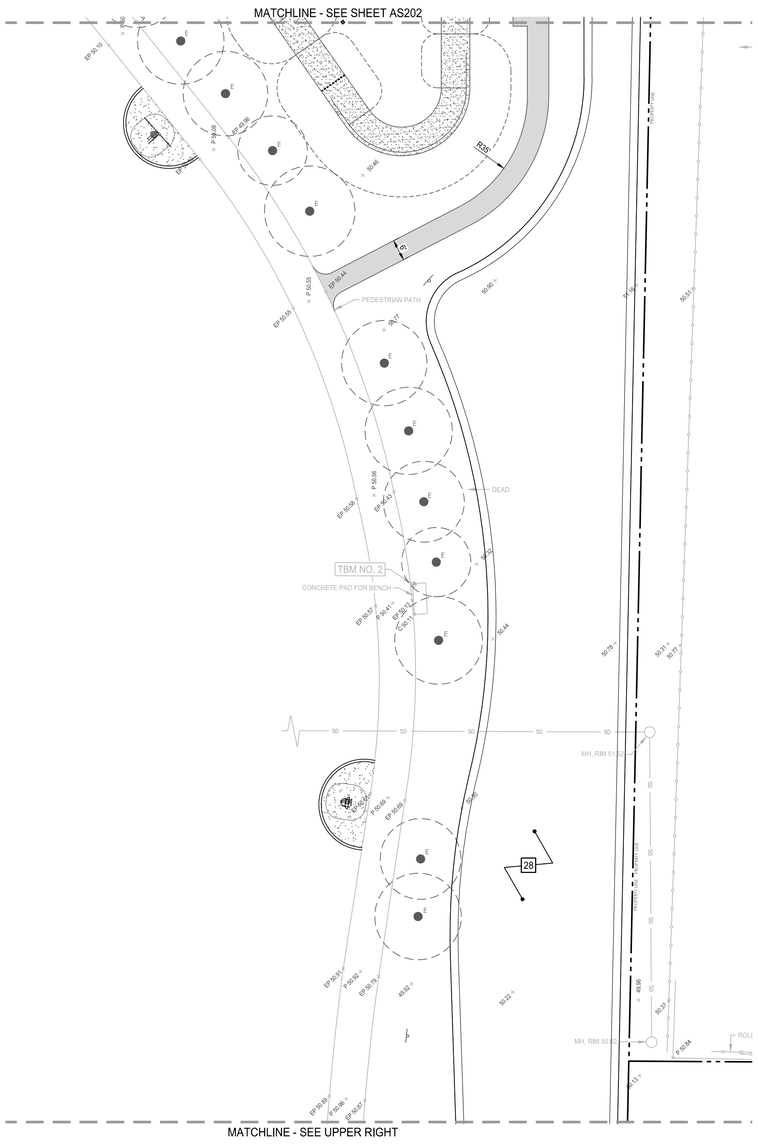

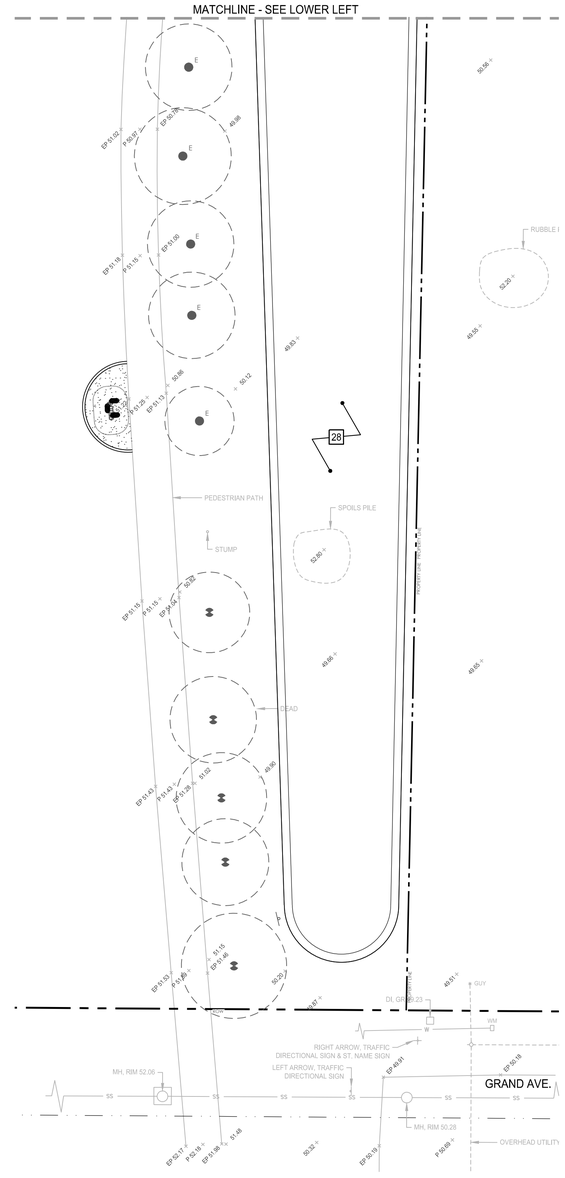

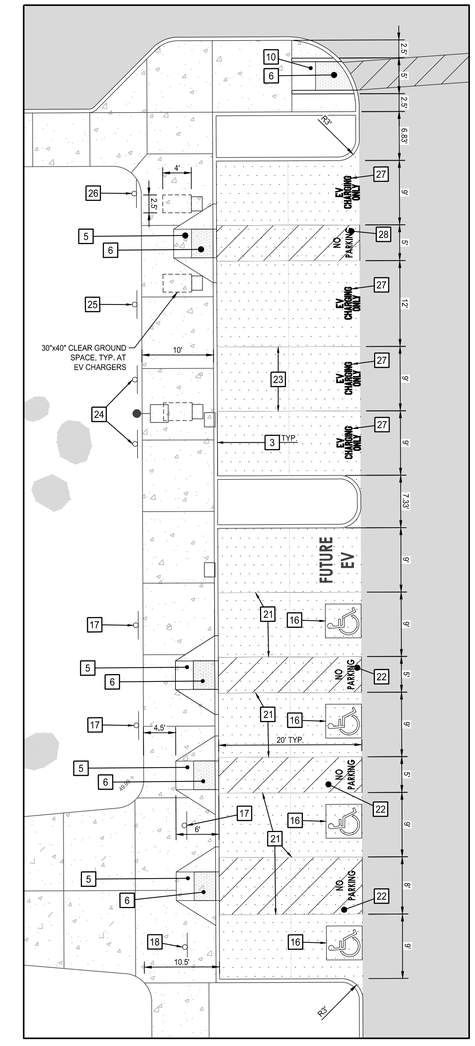

A ENLARGED SITE PLAN

SCALE: 1"=10'

NORTH

CONSTRUCTION KEYNOTES

(SHEETS AS201 - AS203 ONLY)

1. CONSTRUCT 4" THICK CONCRETE WALK WITH THICKENED EDGES, SEE DETAIL 24/AS701.
2. CONSTRUCT ASPHALT CONCRETE PAVEMENT, SEE PAVING PLANS SHEET CS101 - CS103.
3. CONSTRUCT CONCRETE BARRIER CURB. SEE DETAIL 12/AS701.
4. CONSTRUCT CONCRETE CURB & GUTTER CURB. SEE DETAIL 41/AS701.
5. CONSTRUCT ACCESSIBILITY RAMP. SEE DETAIL 12/AS702.
6. FURNISH & INSTALL DETECTABLE WARNING SURFACE, SEE DETAIL 13/AS702.
7. CONCRETE SEAT WALL, SEE LANDSCAPE CONSTRUCTION DWGS.
8. CONCRETE RAMP WALL, SEE LANDSCAPE CONSTRUCTION DWGS.
9. CONSTRUCT CONCRETE STEPS, SEE LANDSCAPE CONSTRUCTION DWGS.
10. CONSTRUCT ACCESSIBILITY RAMP. SEE DETAIL 14/AS702.
11. CONSTRUCT HANDRAILS, SEE LANDSCAPE CONSTRUCTION DWGS.
12. FURNISH & INSTALL ENERGY DISSIPATION DEVICE FOR ROOF DOWNSPOUTS. SEE DETAIL 13/AS703
13. CONSTRUCT PASSENGER DROP-OFF & LOADING ZONE. SEE DETAIL 33/AS702.
14. CONSTRUCT CONCRETE RAMP RETAINING CURB, SEE DETAIL 34/AS702.
15. INSTALL DIRECTIONAL PAVEMENT ARROW. SEE DETAIL 44/AS702.
16. INSTALL ACCESSIBLE PARKING EMBLEM MARKING. SEE DETAIL 31/AS702.
17. FURNISH & INSTALL ACCESSIBLE PARKING SIGN INCLUDING POST AND FOOTINGS. SEE DETAIL 32/AS702 (SIGN A)
18. FURNISH & INSTALL "VAN ACCESSIBLE" PARKING SIGN INCLUDING POST AND FOOTINGS. SEE DETAIL 32/AS702 (SIGN B).
19. FURNISH & INSTALL "UNAUTHORIZED" VEHICLE SIGN INCLUDING POST AND FOOTINGS. SEE DETAIL 42/AS702.
20. FURNISH & INSTALL 4" WIDE WHITE PARKING STRIPES, TYP., U.N.O.
21. FURNISH & INSTALL 4" WIDE BLUE PARKING STRIPE.
22. NEW ACCESS AISLE WITH "NO PARKING" MARKING IN WHITE COLOR. "NO PARKING" LETTERS SHALL BE 12" MINIMUM IN HEIGHT. DIAGONAL CROSS HATCH PATTERN SHALL BE WHITE PAINT 4" WIDE SPACED AT 36" O.C. MAX.
23. FURNISH & INSTALL 4" WIDE GREEN PARKING STRIPE FOR ELECTRIC VEHICLE PARKING SPACES.
24. FURNISH & INSTALL ELECTRIC VEHICLE CHARGING ONLY SIGN. PROVIDE ALL SIGN HARDWARE, POST & FOOTING FOR COMPLETE INSTALLATION. SEE DETAIL 14/AS703
25. FURNISH & INSTALL ELECTRIC VEHICLE CHARGING ONLY SIGN WITH ISA EMBLEM & VAN ACCESSIBLE. PROVIDE ALL SIGN HARDWARE, POST & FOOTING FOR COMPLETE INSTALLATION. SEE DETAIL 24/AS703.
26. FURNISH & INSTALL ELECTRIC VEHICLE CHARGING ONLY SIGN WITH ISA EMBLEM. PROVIDE ALL SIGN HARDWARE, POST & FOOTING FOR COMPLETE INSTALLATION. SEE DETAIL 31/AS703.
27. FURNISH & INSTALL 4" WIDE WHITE MARKING "EV CHARGING ONLY" AT ELECTRIC VEHICLE PARKING SPACES PER MUTCD FIG. 3B-108(CA). SEE DETAIL 32/AS703.
28. BIO RETENTION AREA, SEE DETAIL 34/AS703.
29. CONCRETE JOINTS, SEE DETAIL 24/AS701.

NORTH

GRAPHIC SCALE

20 0 10 20 40

1 INCH = 20 FT.

rrm design group
rrmdesign.com | (805) 543-1794
3765 SOUTH HIGUERA STREET, SUITE 102
SAN LUIS OBISPO, CA 93401

THE INCLUDED DRAWINGS, SPECIFICATIONS, IDEAS, DESIGNS AND ARRANGEMENTS REPRESENTED THEREBY ARE AND SHALL REMAIN THE PROPERTY OF RRM DESIGN GROUP AND NO PART THEREOF SHALL BE COPIED, DISCLOSED TO OTHERS OR USED IN CONNECTION WITH ANY WORK OR PROJECT OTHER THAN THE SPECIFIED PROJECT FOR WHICH THEY HAVE BEEN PREPARED AND DEVELOPED WITHOUT THE WRITTEN CONSENT OF RRM DESIGN GROUP. VISUAL CONTACT WITH THESE DRAWINGS OR OTHERWISE RECEIVING INFORMATION FROM THESE DOCUMENTS IS SUBJECT TO RESTRICTIONS. SUBMITTAL OF THESE DOCUMENTS FOR PUBLIC AGENCY REVIEW SHALL NOT BE CONSIDERED A WAIVER OF RRM DESIGN GROUP'S RIGHTS.
RRM DESIGN GROUP COPYRIGHT 2023.
RRM IS A CALIFORNIA CORPORATION

REGISTERED PROFESSIONAL ENGINEER
W. VANG
C.E. 80967
08/30/2024
CIVIL
STATE OF CALIFORNIA

CONSULTANT

AGENCY

FOURTH ST COMMUNITY CENTER AND PARK

HENDERSON AVE., PORTERVILLE, CA 93257

SITE DIMENSION AND HORIZONTAL CONTROL PLAN

NO.	REVISION	DATE
1	PLAN CHEK REVISION 1	5/17/24

PROJECT MANAGER: LANCE WIERSCHEM
DRAWN BY: W.V.
CHECKED BY: A.P.O.
DATE: 2024.01.15
PROJECT NUMBER: 2883-01-RC22
SHEET: AS203

PLAN CHECK REVISION 1

LANE PROJECT NO. 22306

J:\Jobs\2022\22306\Dwg\Production Drawings\C2_Site Dimension Plan.dwg, AS203, Aug 30, 2024 1:06pm, wa

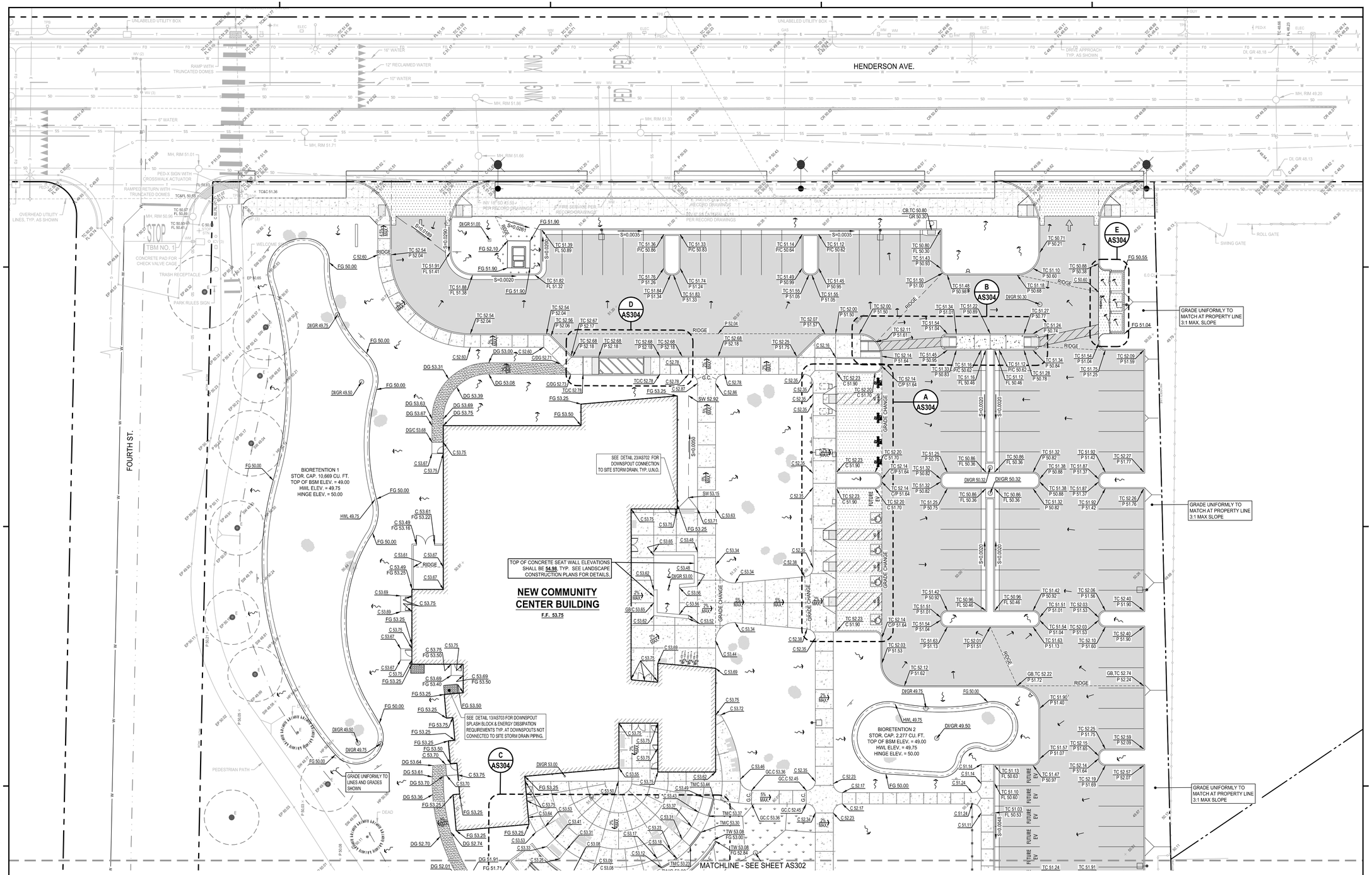

NOTES

1. REFER TO SHEET C001 FOR BENCHMARKS, GENERAL NOTES & INFORMATION.
2. FINISH PAVEMENT ELEVATION IS 0.5' BELOW TOP OF BARRIER/LANDSCAPE CURB IN THE PARKING LOT AREA UNLESS SHOWN OR NOTED OTHERWISE.
3. UNLESS SHOWN OR NOTED OTHERWISE, WHERE FINISH GRADE ABUTS CONCRETE FLATWORK/PAVEMENT/BACK OF CURBS, FINISHED GRADE ELEVATION SHALL BE 1 INCH LOWER THAN ADJACENT CONCRETE IN SHRUB AREAS AND $\frac{1}{2}$ INCH LOWER IN TURF AREAS.
4. REFER TO ARCH DWGS. FOR ADDITIONAL SITE INFORMATION AND DETAILS.
5. SLOPES AT ACCESSIBLE PARKING SPACES SHALL NOT EXCEED 2.0% IN ANY DIRECTION. CONTRACTOR SHALL GRADE PER GRADE LABELS SHOWN.
6. CROSS-SLOPES AT SIDEWALKS SHALL NOT EXCEED 1.5%. CONTRACTOR SHALL GRADE PER GRADE LABELS SHOWN.
7. ALL SITE PREPARATION AND EARTHWORK SHALL BE PERFORMED IN ACCORDANCE WITH THE PROJECT SPECIFICATIONS AND THE NOTES ON THIS SHEET.
8. FIELD VERIFY ALL ELEVATIONS SHOWN WHERE PROPOSED IMPROVEMENTS ABUT EXISTING IMPROVEMENTS. IMMEDIATELY NOTIFY PROJECT ARCHITECT OF ANY DISCREPANCIES.

LEGEND

- NEW CONCRETE SIDEWALK, FLATWORK AND MISCELLANEOUS CONCRETE
- NEW CONCRETE PAVEMENT
- NEW ASPHALT PAVEMENT
- PROPERTY BOUNDARY

NORTH

GRAPHIC SCALE

20 0 10 20 40

1 INCH = 20 FT.

rrm design group
rrmdesign.com | (805) 543-1794
3765 SOUTH HIGUERA STREET, SUITE 102
SAN LUIS OBISPO, CA 93401

THE INCLUDED DRAWINGS, SPECIFICATIONS, IDEAS, DESIGNS AND ARRANGEMENTS REPRESENTED THEREIN ARE AND SHALL REMAIN THE PROPERTY OF RRM DESIGN GROUP AND NO PART THEREOF SHALL BE COPIED, DISCLOSED TO OTHERS OR USED IN CONNECTION WITH ANY WORK OR PROJECT OTHER THAN THE SPECIFIED PROJECT FOR WHICH THEY HAVE BEEN PREPARED AND DEVELOPED WITHOUT THE WRITTEN CONSENT OF RRM DESIGN GROUP. VISUAL CONTACT WITH THESE DRAWINGS OR SPECIFICATIONS SHALL CONSTITUTE PROOF OF ACCEPTANCE OF THE ABOVE RESTRICTIONS. SUBMITTAL OF THESE DOCUMENTS FOR PUBLIC AGENCY REVIEW SHALL NOT BE CONSIDERED A WAIVER OF RRM DESIGN GROUP'S RIGHTS.
RRM DESIGN GROUP COPYRIGHT 2023.
RRM IS A CALIFORNIA CORPORATION

REGISTERED PROFESSIONAL ENGINEER
WA VANG
C.E. NO. 80967
08/30/2024
CIVIL
STATE OF CALIFORNIA

CONSULTANT

AGENCY

FOURTH ST COMMUNITY CENTER AND PARK

HENDERSON AVE., PORTERVILLE, CA 93257

GRADING AND DRAINAGE PLAN

NO.	REVISION	DATE
1	PLAN CHEK REVISION 1	5/17/24

PLAN CHECK REVISION 1

PROJECT MANAGER
LANCE WIERSCHEM

DRAWN BY	CHECKED BY
W.V.	A.P.O.

DATE
2024.01.15

PROJECT NUMBER
2883-01-RC22

SHEET
AS301

LANE PROJECT NO. 22306

J:\Jobs\2022\22306\Dwg\Production Drawings\C3_Grading.dwg, AS301, Aug 30, 2024 1:08pm, wa

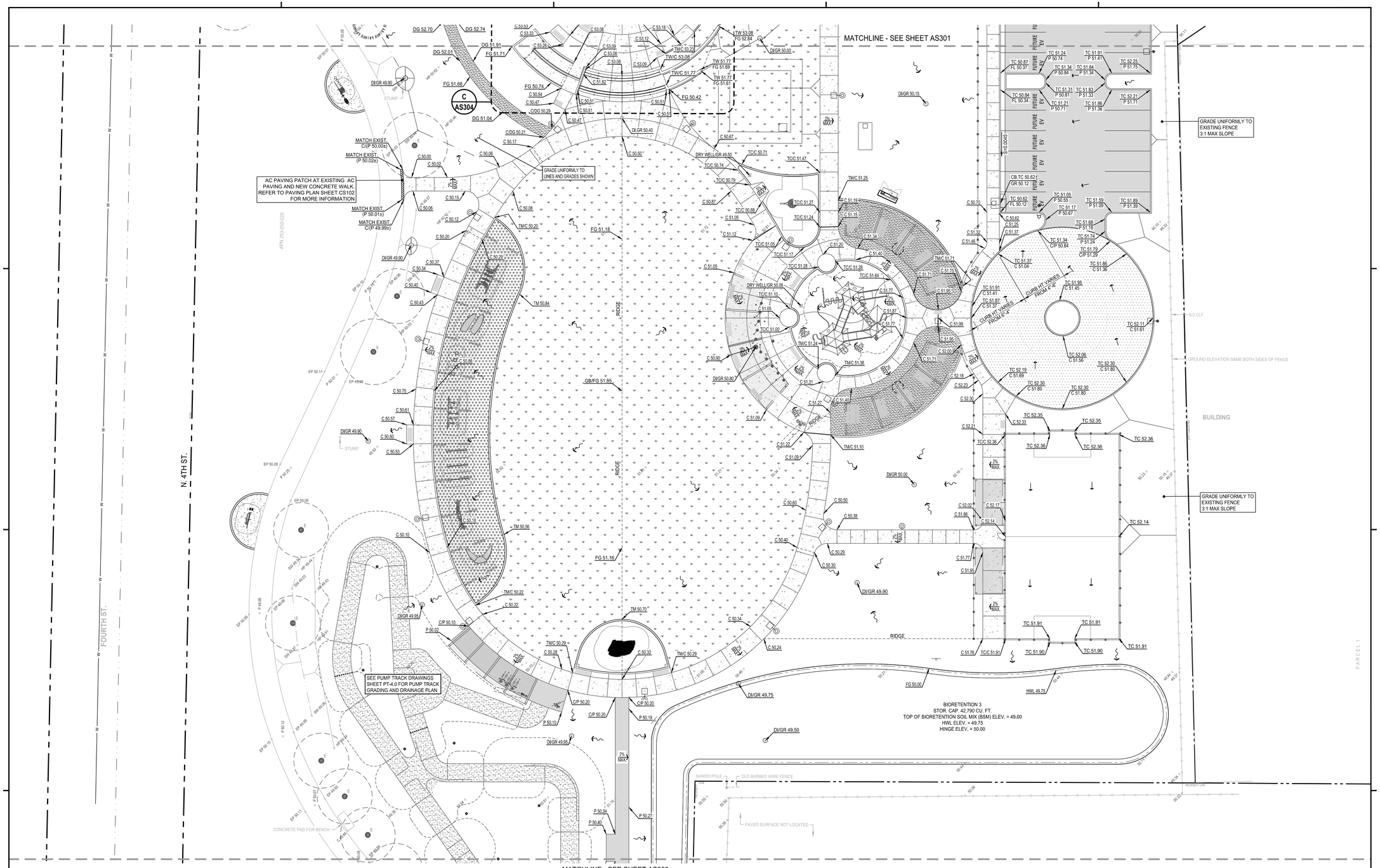

NOTES

1. REFER TO SHEET C001 FOR BENCHMARKS, GENERAL NOTES & INFORMATION.
2. FINISH PAVEMENT ELEVATION IS 0.5' BELOW TOP OF BARRIER/LANDSCAPE CURB IN THE PARKING LOT AREA UNLESS SHOWN OR NOTED OTHERWISE.
3. UNLESS SHOWN OR NOTED OTHERWISE, WHERE FINISH GRADE ABUTS CONCRETE FLATWORK/PAVEMENT/BACK OF CURBS, FINISHED GRADE ELEVATION SHALL BE 1 INCH LOWER THAN ADJACENT CONCRETE IN SHRUB AREAS AND ½ INCH LOWER IN TURF AREAS.
4. REFER TO ARCH DWGS. FOR ADDITIONAL SITE INFORMATION AND DETAILS.
5. SLOPES AT ACCESSIBLE PARKING SPACES SHALL NOT EXCEED 2.0% IN ANY DIRECTION. CONTRACTOR SHALL GRADE PER GRADE LABELS SHOWN.
6. CROSS-SLOPES AT SIDEWALKS SHALL NOT EXCEED 1.5%. CONTRACTOR SHALL GRADE PER GRADE LABELS SHOWN.
7. ALL SITE PREPARATION AND EARTHWORK SHALL BE PERFORMED IN ACCORDANCE WITH THE PROJECT SPECIFICATIONS AND THE NOTES ON THIS SHEET.
8. FIELD VERIFY ALL ELEVATIONS SHOWN WHERE PROPOSED IMPROVEMENTS ABUT EXISTING IMPROVEMENTS. IMMEDIATELY NOTIFY PROJECT ARCHITECT OF ANY DISCREPANCIES.

LEGEND

- NEW CONCRETE SIDEWALK, FLATWORK AND MISCELLANEOUS CONCRETE
- NEW CONCRETE PAVEMENT
- NEW ASPHALT PAVEMENT
- PROPERTY BOUNDARY

NORTH

GRAPHIC SCALE

20 0 10 20 40

1 INCH = 20 FT.

PLAN CHECK REVISION 1

rrm design group
rrmdesign.com | (805) 543-1794
3765 SOUTH HIGUERA STREET, SUITE 102
SAN LUIS OBISPO, CA 93401

THE INCLUDED DRAWINGS, SPECIFICATIONS, IDEAS, DESIGNS AND ARRANGEMENTS REPRESENTED THEREBY ARE AND SHALL REMAIN THE PROPERTY OF RRM DESIGN GROUP AND NO PART THEREOF SHALL BE COPIED, DISCLOSED TO OTHERS OR USED IN CONNECTION WITH ANY WORK OR PROJECT OTHER THAN THE SPECIFIED PROJECT FOR WHICH THEY HAVE BEEN PREPARED AND DEVELOPED WITHOUT THE WRITTEN CONSENT OF RRM DESIGN GROUP. VISUAL CONTACT WITH THESE DRAWINGS OR SPECIFICATIONS SHALL CONSTITUTE CONCLUSIVE EVIDENCE OF ACCEPTANCE OF THESE RESTRICTIONS. SUBMITTAL OF THESE DOCUMENTS FOR PUBLIC AGENCY REVIEW SHALL NOT BE CONSIDERED A WAIVER OF RRM DESIGN GROUP'S RIGHTS.
RRM DESIGN GROUP COPYRIGHT 2023.
RRM IS A CALIFORNIA CORPORATION

REGISTERED PROFESSIONAL ENGINEER
WA VANG
R.C.E. 86967
08/30/2024
CIVIL
STATE OF CALIFORNIA

CONSULTANT

AGENCY

FOURTH ST COMMUNITY CENTER AND PARK

HENDERSON AVE., PORTERVILLE, CA 93257

GRADING AND DRAINAGE PLAN

NO.	REVISION	DATE
1	PLAN CHEK REVISION 1	5/17/24

PROJECT MANAGER
LANCE WIERSCHEM

DRAWN BY: W.V.
CHECKED BY: A.P.O.

DATE
2024.01.15

PROJECT NUMBER
2883-01-RC22

SHEET
AS302

LANE PROJECT NO. 22306

J:\Jobs\2022\22306\Dwg\Production Drawings\C3_Grading.dwg, AS302, Aug 30, 2024 1:09pm, wa

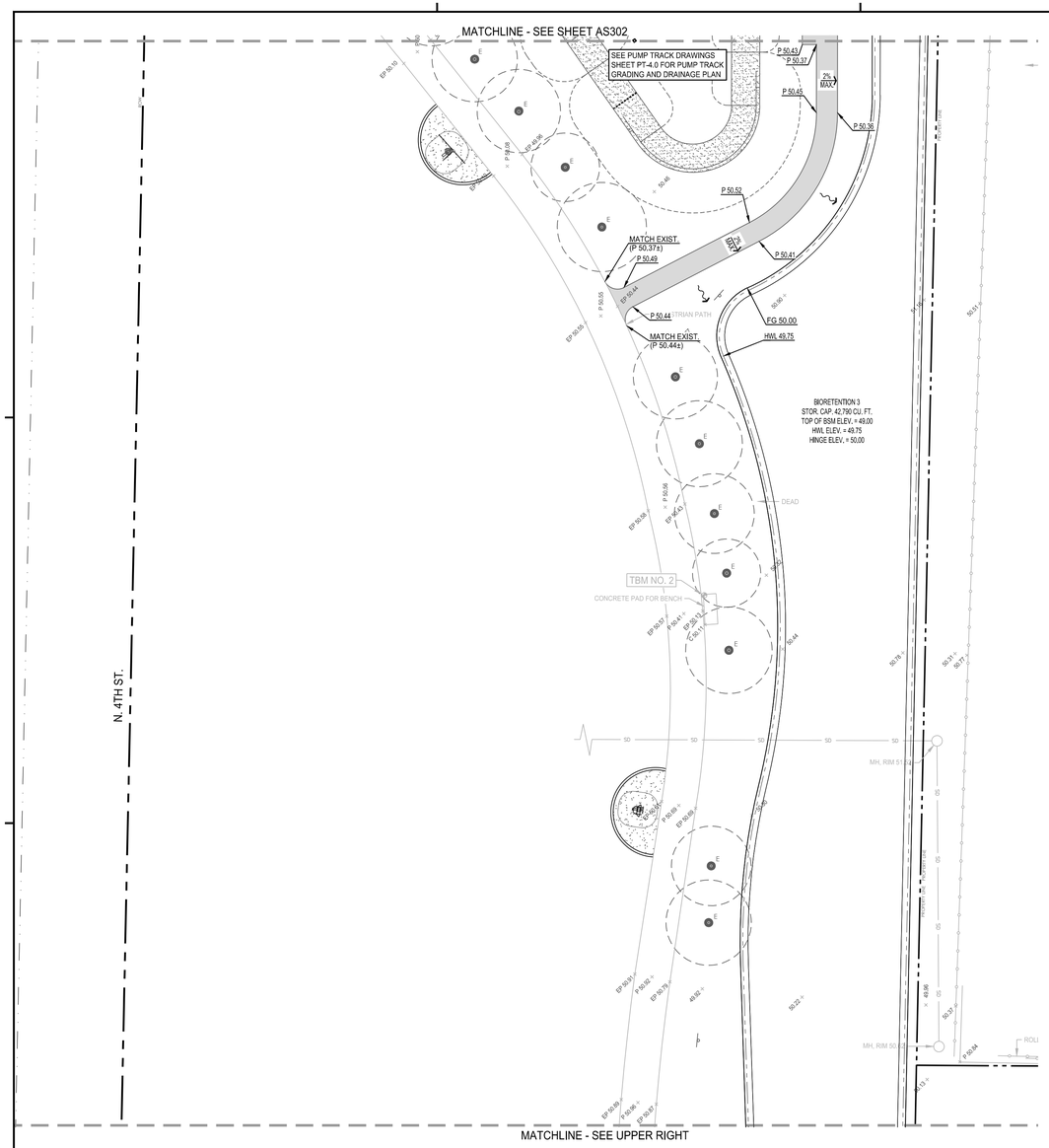

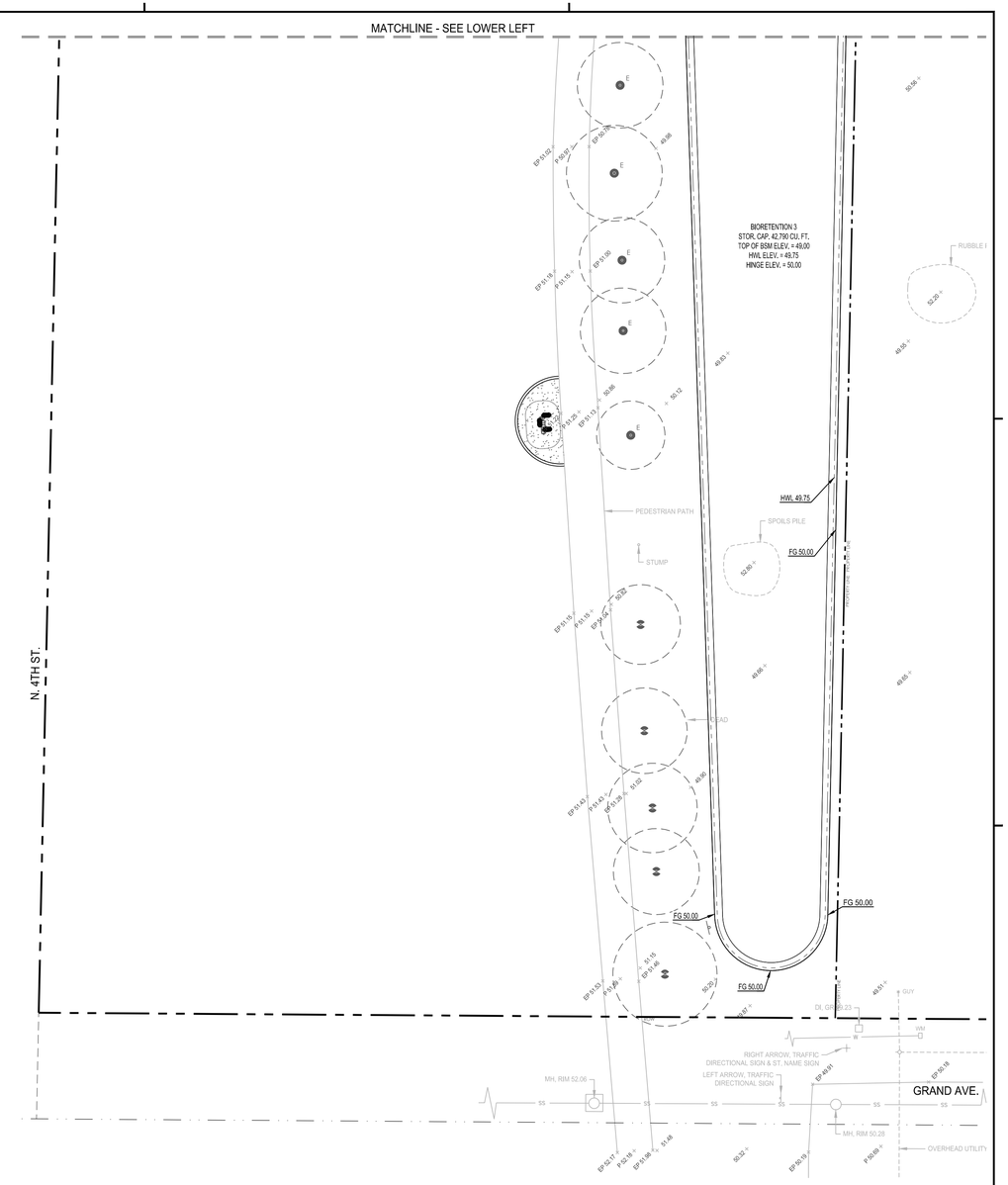

NOTES

1. REFER TO SHEET C001 FOR BENCHMARKS, GENERAL NOTES & INFORMATION.
2. FINISH PAVEMENT ELEVATION IS 0.5' BELOW TOP OF BARRIER/LANDSCAPE CURB IN THE PARKING LOT AREA UNLESS SHOWN OR NOTED OTHERWISE.
3. UNLESS SHOWN OR NOTED OTHERWISE, WHERE FINISH GRADE ABUTS CONCRETE FLATWORK/PAVEMENT/BACK OF CURBS, FINISHED GRADE ELEVATION SHALL BE 1 INCH LOWER THAN ADJACENT CONCRETE IN SHRUB AREAS AND $\frac{1}{2}$ INCH LOWER IN TURF AREAS.
4. REFER TO ARCH DWGS. FOR ADDITIONAL SITE INFORMATION AND DETAILS.
5. SLOPES AT ACCESSIBLE PARKING SPACES SHALL NOT EXCEED 2.0% IN ANY DIRECTION. CONTRACTOR SHALL GRADE PER GRADE LABELS SHOWN.
6. CROSS-SLOPES AT SIDEWALKS SHALL NOT EXCEED 1.5%. CONTRACTOR SHALL GRADE PER GRADE LABELS SHOWN.
7. ALL SITE PREPARATION AND EARTHWORK SHALL BE PERFORMED IN ACCORDANCE WITH THE PROJECT SPECIFICATIONS AND THE NOTES ON THS SHEET.
8. FIELD VERIFY ALL ELEVATIONS SHOWN WHERE PROPOSED IMPROVEMENTS ABUT EXISTING IMPROVEMENTS. IMMEDIATELY NOTIFY PROJECT ARCHITECT OF ANY DISCREPANCIES.

LEGEND

- NEW CONCRETE SIDEWALK, FLATWORK AND MISCELLANEOUS CONCRETE
- NEW CONCRETE PAVEMENT
- NEW ASPHALT PAVEMENT
- PROPERTY BOUNDARY

NORTH

GRAPHIC SCALE

20 0 10 20 40

1 INCH = 20 FT.

rrm design group
rrmdesign.com | (805) 543-1794
3765 SOUTH HIGUERA STREET, SUITE 102
SAN LUIS OBISPO, CA 93401

THE INCLUDED DRAWINGS, SPECIFICATIONS, IDEAS, DESIGNS AND ARRANGEMENTS REPRESENTED THEREBY ARE AND SHALL REMAIN THE PROPERTY OF RRM DESIGN GROUP AND NO PART THEREOF SHALL BE COPIED, DISCLOSED TO OTHERS OR USED IN CONNECTION WITH ANY WORK OR PROJECT OTHER THAN THE SPECIFIED PROJECT FOR WHICH THEY HAVE BEEN PREPARED AND DEVELOPED WITHOUT THE WRITTEN CONSENT OF RRM DESIGN GROUP. VISUAL CONTACT WITH THESE DRAWINGS OR OTHERWISE RECEIVING THESE DOCUMENTS CONSTITUTES SUCH CONSENT AND RESTRICTIONS. SUBMITTAL OF THESE DOCUMENTS FOR PUBLIC AGENCY REVIEW SHALL NOT BE CONSIDERED A WAIVER OF RRM DESIGN GROUP'S RIGHTS.
RRM DESIGN GROUP COPYRIGHT 2023.
RRM IS A CALIFORNIA CORPORATION

REGISTERED PROFESSIONAL ENGINEER
WA VANG
No. RCE 86967
08/30/2024
CIVIL
STATE OF CALIFORNIA

CONSULTANT

AGENCY

FOURTH ST COMMUNITY CENTER AND PARK

HENDERSON AVE., PORTERVILLE, CA 93257

GRADING AND DRAINAGE PLAN

NO.	REVISION	DATE
1	PLAN CHEK REVISION 1	5/17/24

PROJECT MANAGER: LANCE WIERSCHEM
DRAWN BY: W.V.
CHECKED BY: A.P.O.
DATE: 2024.01.15
PROJECT NUMBER: 2883-01-RC22
SHEET: AS303

PLAN CHECK REVISION 1

LANE PROJECT NO. 22306

J:\Jobs\2022\22306\Dwg\Production Drawings\C3_Grading.dwg, AS303, Aug 30, 2024 1:09pm, wa

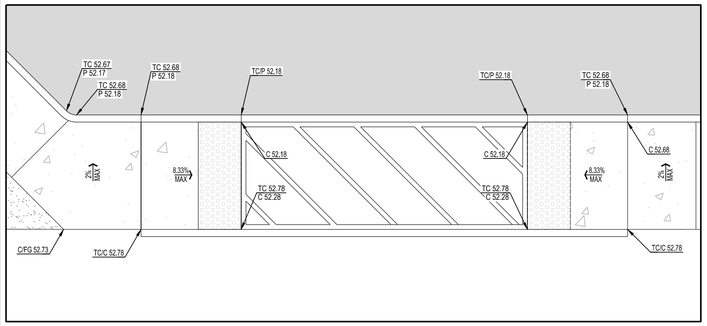

D ENLARGED GRADING PLAN

SCALE: 1"=5'

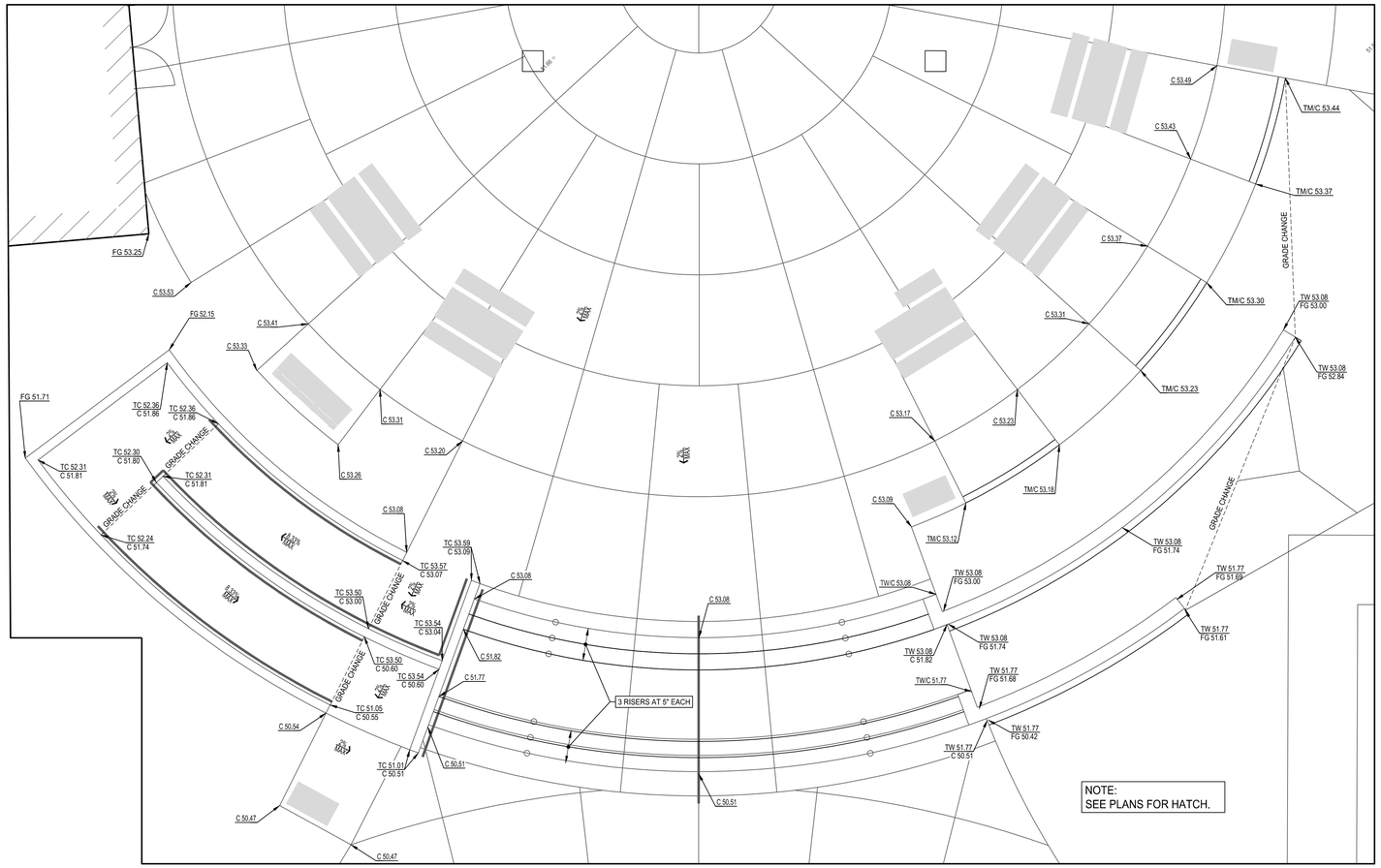

C ENLARGED GRADING PLAN

SCALE: 1"=5'

NORTH

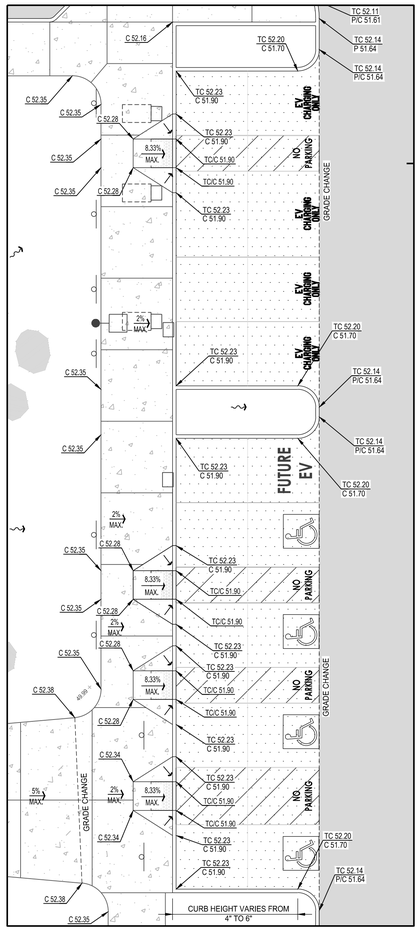

A ENLARGED GRADING PLAN

SCALE: 1"=10'

NORTH

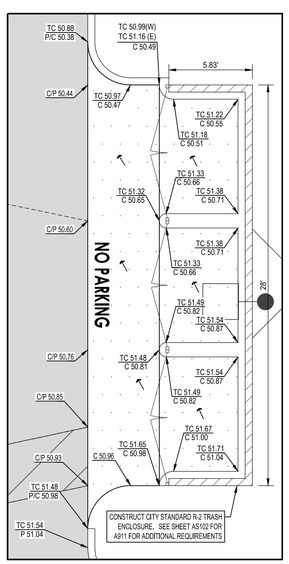

E ENLARGED GRADING PLAN

SCALE: 1"=5'

NORTH

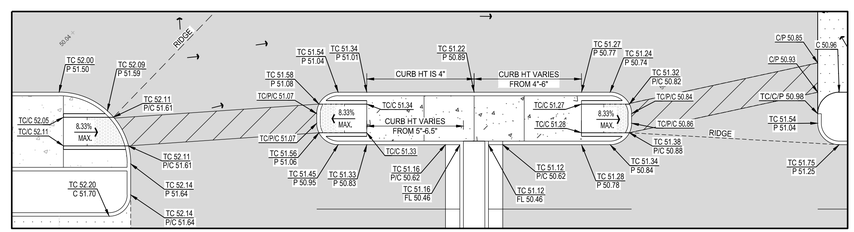

B ENLARGED GRADING PLAN

SCALE: 1"=10'

NORTH

NOTES

1. REFER TO SHEET C001 FOR BENCHMARKS, GENERAL NOTES & INFORMATION.
2. FINISH PAVEMENT ELEVATION IS 0.5' BELOW TOP OF BARRIER/LANDSCAPE CURB IN THE PARKING LOT AREA UNLESS SHOWN OR NOTED OTHERWISE.
3. UNLESS SHOWN OR NOTED OTHERWISE, WHERE FINISH GRADE ABUTS CONCRETE FLATWORK/PAVEMENT/BACK OF CURBS, FINISHED GRADE ELEVATION SHALL BE 1 INCH LOWER THAN ADJACENT CONCRETE IN SHRUB AREAS AND $\frac{1}{2}$ INCH LOWER IN TURF AREAS.
4. REFER TO ARCH DWGS. FOR ADDITIONAL SITE INFORMATION AND DETAILS.
5. SLOPES AT ACCESSIBLE PARKING SPACES SHALL NOT EXCEED 2.0% IN ANY DIRECTION. CONTRACTOR SHALL GRADE PER GRADE LABELS SHOWN.
6. CROSS-SLOPES AT SIDEWALKS SHALL NOT EXCEED 1.5%. CONTRACTOR SHALL GRADE PER GRADE LABELS SHOWN.
7. ALL SITE PREPARATION AND EARTHWORK SHALL BE PERFORMED IN ACCORDANCE WITH THE PROJECT SPECIFICATIONS AND THE NOTES ON THIS SHEET.
8. FIELD VERIFY ALL ELEVATIONS SHOWN WHERE PROPOSED IMPROVEMENTS ABUT EXISTING IMPROVEMENTS. IMMEDIATELY NOTIFY PROJECT ARCHITECT OF ANY DISCREPANCIES.

LEGEND

- NEW CONCRETE SIDEWALK, FLATWORK AND MISCELLANEOUS CONCRETE
- NEW CONCRETE PAVEMENT
- NEW ASPHALT PAVEMENT
- PROPERTY BOUNDARY

rrm design group
rrmdesign.com | (805) 543-1794
3765 SOUTH HIGUERA STREET, SUITE 102
SAN LUIS OBISPO, CA 93401

THE INCLUDED DRAWINGS, SPECIFICATIONS, IDEAS, DESIGNS AND ARRANGEMENTS REPRESENTED THEREBY ARE AND SHALL REMAIN THE PROPERTY OF RRM DESIGN GROUP AND NO PART THEREOF SHALL BE COPIED, DISCLOSED TO OTHERS OR USED IN CONNECTION WITH ANY WORK OR PROJECT OTHER THAN THE SPECIFIC PROJECT FOR WHICH THEY HAVE BEEN PREPARED AND DEVELOPED WITHOUT THE WRITTEN CONSENT OF RRM DESIGN GROUP. VISUAL CONTACT WITH THESE DRAWINGS OR OTHER PROJECT DOCUMENTS SHALL CONSTITUTE PROOF OF ACCEPTANCE OF THE RESTRICTIONS. SUBMITTAL OF THESE DOCUMENTS FOR PUBLIC AGENCY REVIEW SHALL NOT BE CONSIDERED A WAIVER OF RRM DESIGN GROUP'S RIGHTS.
RRM DESIGN GROUP COPYRIGHT 2023.
RRM IS A CALIFORNIA CORPORATION

REGISTERED PROFESSIONAL ENGINEER
WA VANG
C 67 RCE: 80967
08/30/2024
CIVIL
STATE OF CALIFORNIA

CONSULTANT

AGENCY

FOURTH ST COMMUNITY CENTER AND PARK

HENDERSON AVE., PORTERVILLE, CA 93257

GRADING AND DRAINAGE PLAN

NO.	REVISION	DATE
1	PLAN CHEK REVISION 1	5/17/24

PLAN CHECK REVISION 1

PROJECT MANAGER: LANCE WIERSCHEM
DRAWN BY: W.V.
CHECKED BY: A.P.O.
DATE: 2024.01.15
PROJECT NUMBER: 2883-01-RC22
SHEET: AS304

LANE PROJECT NO. 22306

J:\Jobs\2022\22306\Dwg\Production Drawings\C3_Grading.dwg, AS304, Aug 30, 2024 1:10pm, wa

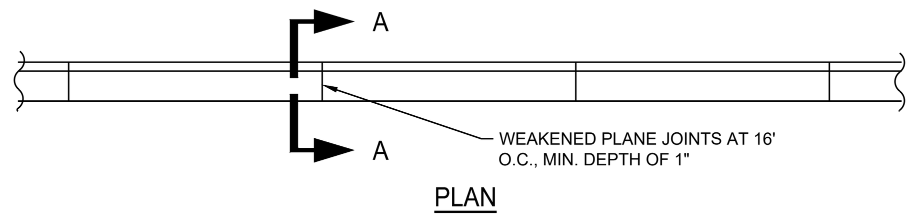

NOTES:

1. BARRIER TYPE CURB & GUTTER SHALL HAVE A MIN. GRADIENT OF 0.15' PER 100 FEET.
2. ALL CONCRETE SHALL BE 2500PSI MIN. AT 28 DAYS
3. A WEAKENED PLANE JOINT OR COLD JOINT SHALL BE INSTALLED AT THE END OF CURB RETURNS AND AT CENTER LINE OF PROPOSED DRIVE APPROACHES.
4. CURB AND GUTTER SHALL BE PLACED ON MOIST AND COMPACTED BASE MATERIALS (90% RELATIVE COMPACTION).
5. ALL EXPOSED SURFACES OF CURB & GUTTER SHALL NOT VARY IN EXCESS OF 0.02' WHEN A 10' STRAIGHT EDGE IS PLACED ON THE SURFACE, EXCEPT AT GRADE CHANGES OR CURVES.

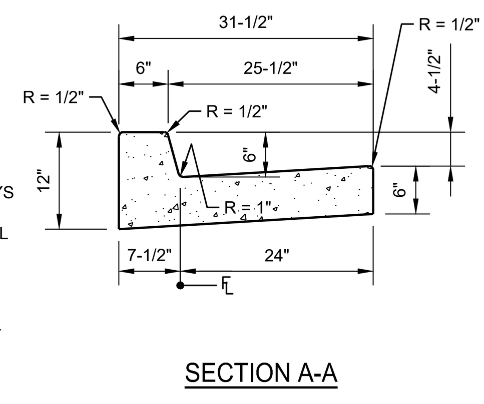

SECTION A-A

CONCRETE CURB AND GUTTER — NO SCALE — 41

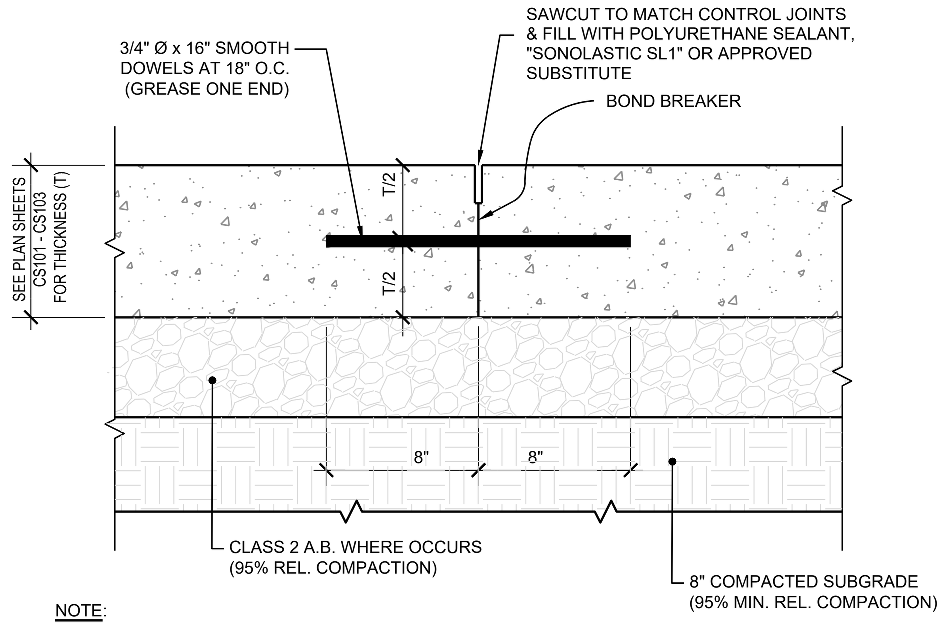

NOTE:

CONSTRUCTION JOINTS SHALL BE USED WHEN CONCRETE PAVING OPERATIONS ARE INTERRUPTED, SUCH AS EQUIPMENT BREAKDOWNS, WEATHER, OR WHEN WORK IS ENDED FOR THE DAY.

CONSTRUCTION JOINT — NO SCALE — 31

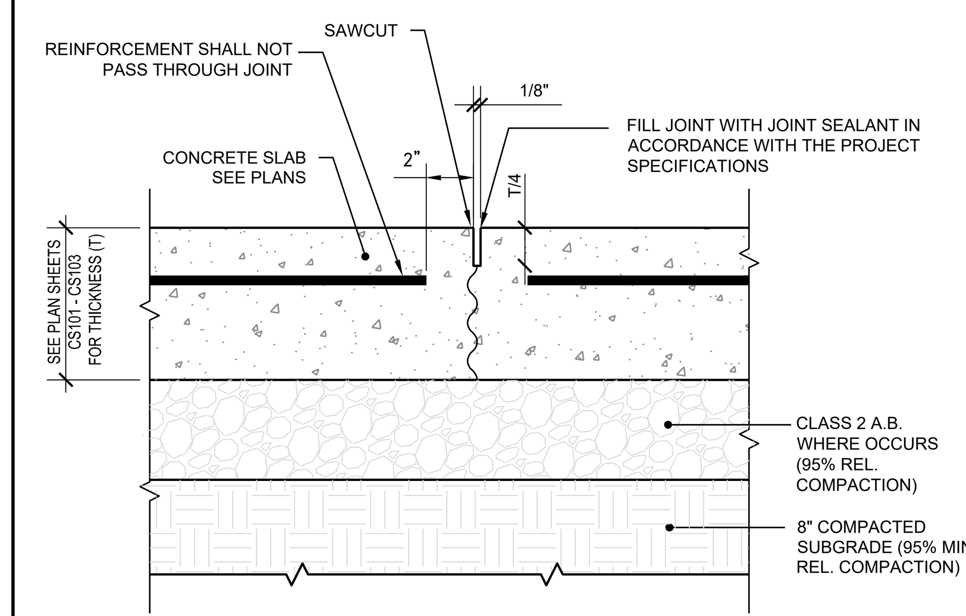

CONTROL JOINT — NO SCALE — 21

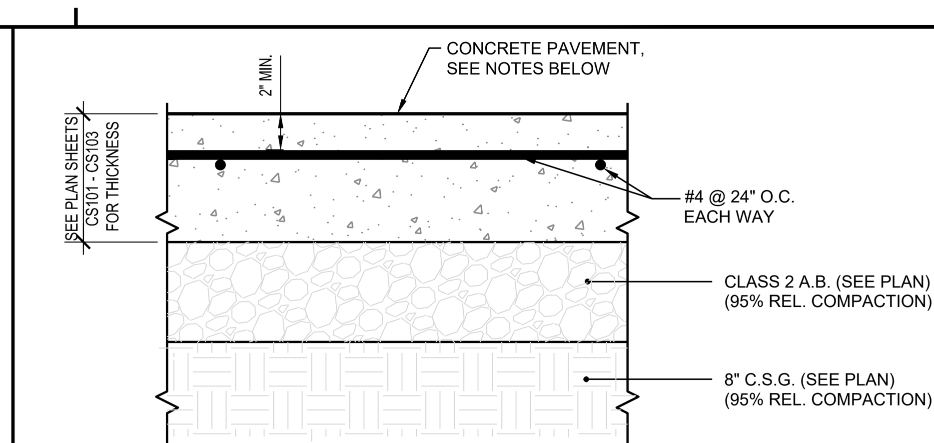

NOTES:

1. CONCRETE PAVEMENT SHALL HAVE A MIN. COMPRESSIVE STRENGTH OF 4,000 PSI AT 28 DAYS, 4" MAX. SLUMP, SEE PROJECT SPECIFICATIONS.
2. MAXIMUM WATER/CEMENT RATIO SHALL BE 0.50 AND A SLUMP LIMIT OF 5 INCHES MAXIMUM.
3. JOINT SPACING AND CONSTRUCTION JOINT SHALL BE AS NOTED ON SHEETS CS101-CS103.
4. ALL CONCRETE SURFACES SHALL RECEIVE A MEDIUM TEXTURED BROOM FINISH: DRAW A SOFT-BRISTLE BROOM ACROSS FLOAT-FINISHED CONCRETE SURFACE PERPENDICULAR TO LINE OF TRAFFIC TO PROVIDE A UNIFORM, FINE-LINE TEXTURE.
5. GROUND SURFACE TO RECEIVE CONCRETE DRIVEWAYS OR BITUMINOUS PAVEMENTS SHALL BE SCARIFIED TO A MINIMUM DEPTH OF 12 INCHES BELOW THE GRADING PLANE IN CUT AREAS OR 12 INCHES IN AREAS TO RECEIVE FILL. ENGINEER FILL SHALL BE COMPACTED TO A MINIMUM OF 90 PERCENT OF THE MAXIMUM DENSITY AS OBTAINED BY ASTM TEST METHOD D1557 AND SHALL EXTEND A MINIMUM OF TWO (2) FEET BEYOND THE OUTSIDE EDGES OF PAVEMENT. THE TOP EIGHT (8) INCHES OF SUBGRADE BELOW THE GRADING PLANE SHALL BE COMPACTED TO A MINIMUM OF 95%.
6. SEE PROJECT SPECIFICATION AND GEOTECHNICAL INVESTIGATION REPORT BY SOILS ENGINEERING, INC. (SEI FILE 22-18633, DATED JANUARY 13, 2023) FOR PAVEMENT SUBGRADE PREPARATION REQUIREMENTS.

NO SCALE

REINF. CONCRETE PAVING SECTION — 11

PROVIDE 3/8" CHAIN AND PADLOCKS FOR EACH GATE VALVE TO PREVENT UNAUTHORIZED OPERATION.

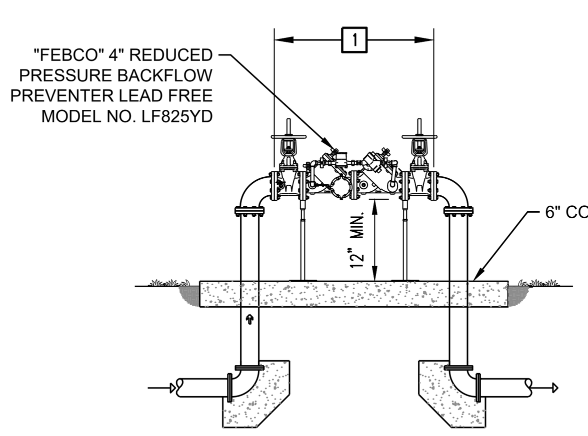

NOTES:
1. REDUCE PRESSURE PRINCIPLE ASSEMBLY.
2. EXPOSE PIPING TO BE INSULATED.
3. ALL FLANGED FITTINGS WHICH ARE BURIED SHALL HAVE PLASTIC WRAP, 30 MIL.

NO SCALE

4" DOMESTIC BACKFLOW PREVENTER — 42

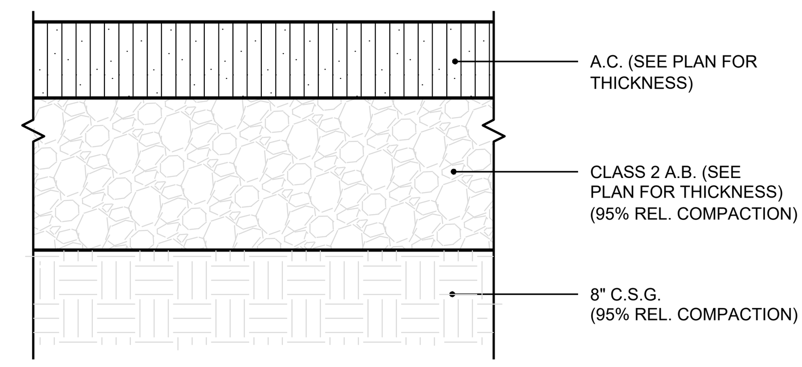

NOTES:

1. A.C. PAVEMENT SHALL BE COMPACTED TO 91% TO 97% (CTM 375, ASTM D2950 OR EQUIVALENT)
2. ALL ONSITE ASPHALT CONCRETE PAVING SHALL CONFORM TO SECTION 28 (HOT MIX ASPHALT) OF THE CITY OF PORTERVILLE ENGINEERING STANDARD SPECIFICATIONS, LATEST EDITION.
3. ON-SITE A.C. PAVEMENT SHALL BE TYPE 'B" WITH 1/2" AGGREGATE GRADATION.
4. GROUND SURFACE TO RECEIVE CONCRETE DRIVEWAYS OR BITUMINOUS PAVEMENTS SHALL BE SCARIFIED TO A MINIMUM DEPTH OF 12 INCHES BELOW THE GRADING PLANE IN CUT AREAS OR 12 INCHES IN AREAS TO RECEIVE FILL. ENGINEER FILL SHALL BE COMPACTED TO A MINIMUM OF 90 PERCENT OF THE MAXIMUM DENSITY AS OBTAINED BY ASTM TEST METHOD D1557 AND SHALL EXTEND A MINIMUM OF TWO (2) FEET BEYOND THE OUTSIDE EDGES OF PAVEMENT. THE TOP EIGHT (8) INCHES OF SUBGRADE BELOW THE GRADING PLANE SHALL BE COMPACTED TO A MINIMUM OF 95%.
5. SEE PROJECT SPECIFICATION AND GEOTECHNICAL INVESTIGATION REPORT BY SOILS ENGINEERING, INC. (SEI FILE 22-18633, DATED JANUARY 13, 2023) FOR PAVEMENT SUBGRADE PREPARATION REQUIREMENTS.

ASPHALT CONCRETE PAVEMENT — NO SCALE — 32

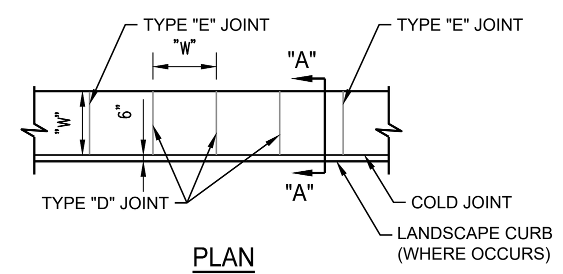

NOTE:
JOINT PATTERNS SHOWN ON ARCH. DWGS. TAKE PRECEDENCE OVER THESE DETAILS.

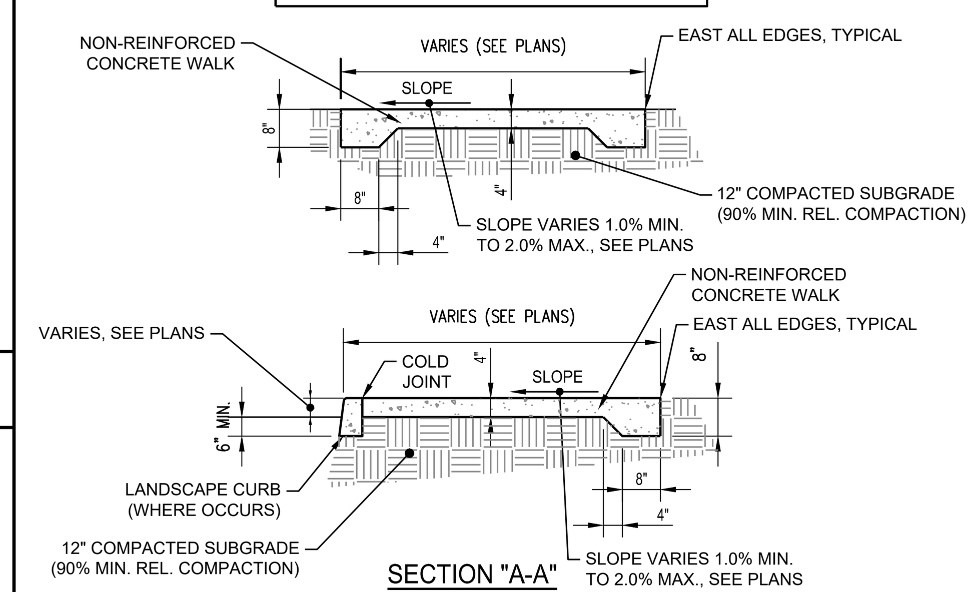

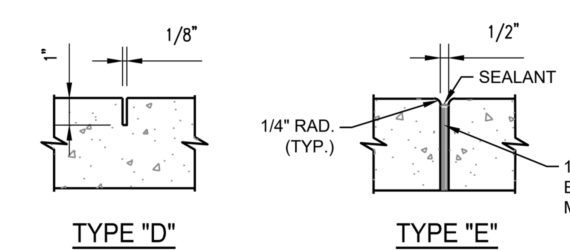

TABLE OF SIDEWALK JOINTS	
TYPE	LOCATION
"D"	TRANSVERSE JOINT AT INTERVALS EQUAL TO THE SIDEWALK WIDTH EXCEPT EVERY FOURTH JOINT WHICH IS A TYPE "E" JOINT.
"E"	EVERY FOURTH TRANSVERSE JOINT, P.C AND P.T. OF CURVES, ABRUPT CHANGES IN DIRECTION, AND WHERE NEW SIDEWALK ABUTS EXISTING SIDEWALK OR OTHER EXIST. CONCRETE SURFACE STRUCTURES.

NOTES:

1. TYPE "D" JOINT MAY BE EITHER TOOLED IN WET CONCRETE OR SAWCUT WITHIN 18 HOURS OF PLACEMENT OF CONCRETE.
2. SIDEWALKS LOCATED IN STREET RIGHTS-OF-WAY SHALL CONFORM TO CITY STANDARDS AND SPECIFICATIONS.
3. EXCAVATE EARTH MATERIAL TO A MINIMUM DEPTH OF 12 INCHES BELOW EXISTING GRADE OR ONE (1) FOOT BELOW THE BOTTOM OF PROPOSED CONCRETE IMPROVEMENTS, WHICHEVER IS DEEPER. WORK TO LINES AT LEAST TWO (2) FEET BEYOND CONCRETE EDGES.
4. THE TOP EIGHT (8") INCHES OF MATERIALS EXPOSED AT THE BOTTOM OF THE EXCAVATION SHALL BE SCARIFIED AND COMPACTED TO A MINIMUM OF 90 PERCENT OF ASTM D1557.
5. MOISTEN EXCAVATED AND IMPORTED SOILS TO NEAR OPTIMUM MOISTURE CONSISTENT WITH EFFECTIVE COMPACTION AND SOIL STABILITY. COMPACT MOISTENED SOILS TO A MINIMUM OF 90 PERCENT OF THE MAXIMUM DENSITY OBTAINED BY ASTM TEST METHOD D1557.
6. THE UPPER 12 INCHES OF FINISHED SUBGRADE SHALL BE NON-EXPANSIVE SOIL (EXPANSION INDEX LESS THAN 20). THE ON-SITE SOIL WITH EXPANSION INDEX GREATER THAN 20 MUST BE PLACED 2 FEET BELOW FINISHED SUBGRADE.
7. THE BOTTOM OF EXCAVATION SHALL BE REVIEWED AND APPROVED BY THE PROJECT GEOTECHNICAL ENGINEER PRIOR TO ANY BACKFILL OPERATIONS. ADDITIONAL EXCAVATION AND FILL PLACEMENT MAY BE REQUIRED AT THE DISCRETION OF THE PROJECT GEOTECHNICAL ENGINEER.
8. SEE PROJECT SPECIFICATION AND GEOTECHNICAL INVESTIGATION REPORT BY SOILS ENGINEERING, INC. (SEI FILE 22-18633, DATED JANUARY 13, 2023) FOR ADDITIONAL REQUIREMENTS.

NO SCALE

SIDEWALK & FLATWORK CONSTRUCTION — 24

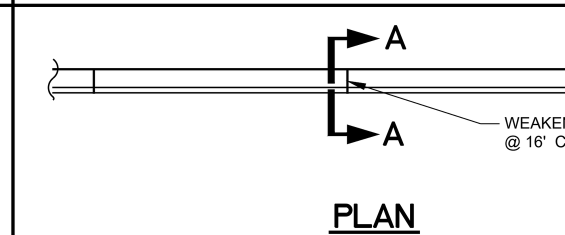

NOTES:
1. ALL CONCRETE WORK SHALL BE 2500 PSI AT 28 DAYS.
2. ALL CONCRETE WORK SHALL HAVE A LIGHT BROOM FINISH.
3. WEAKENED PLANE JOINTS SHALL BE CONSTRUCTED AT 16' CTR'S. AND SHALL BE FINISHED WITH A SCORING TOOL LEAVING THE EDGES ROUNDED.
4. CURB SHALL BE PLACED ON MOIST AND COMPACTED SUBGRADE MATERIALS (95% RELATIVE COMPACTION.)
5. ALL EXPOSED SURFACES OF CURB & GUTTER SHALL NOT VARY IN EXCESS OF 0.02' WHEN AN 10' STRAIGHT EDGE IS PLACED ON THE SURFACE, EXCEPT AT GRADE CHANGES OR CURVES.

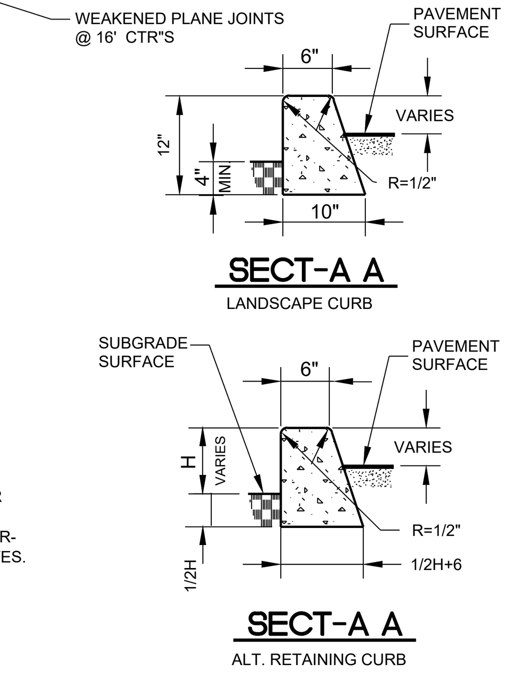

LANDSCAPE BARRIER CURB — NO SCALE — 12

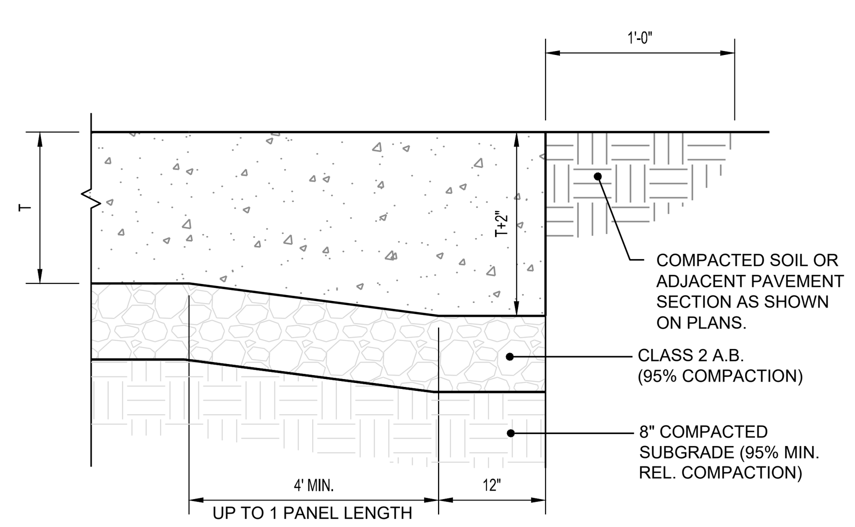

THICKENED EDGE — NO SCALE — 43

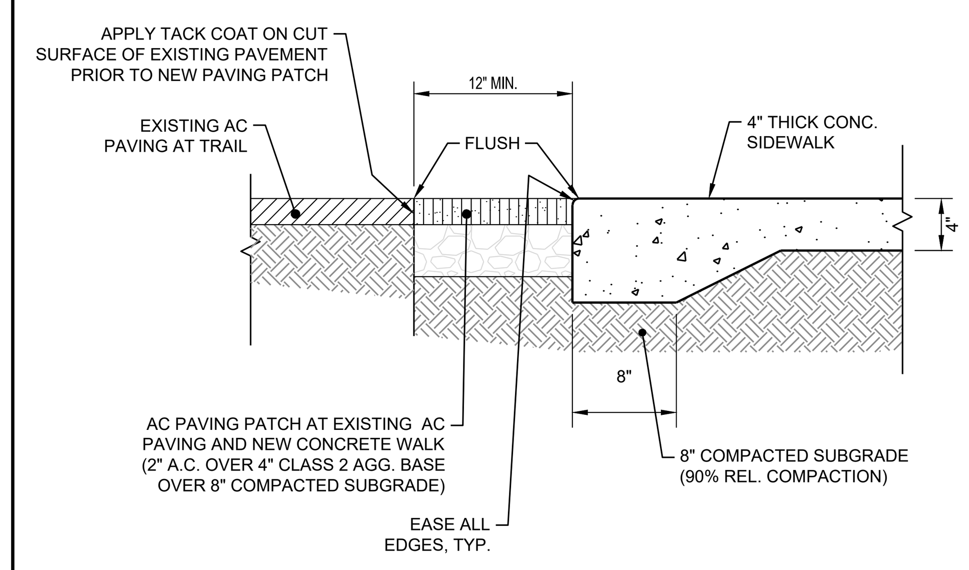

NO SCALE

AC PAVING PATCH AT CONCRETE WALK — 33

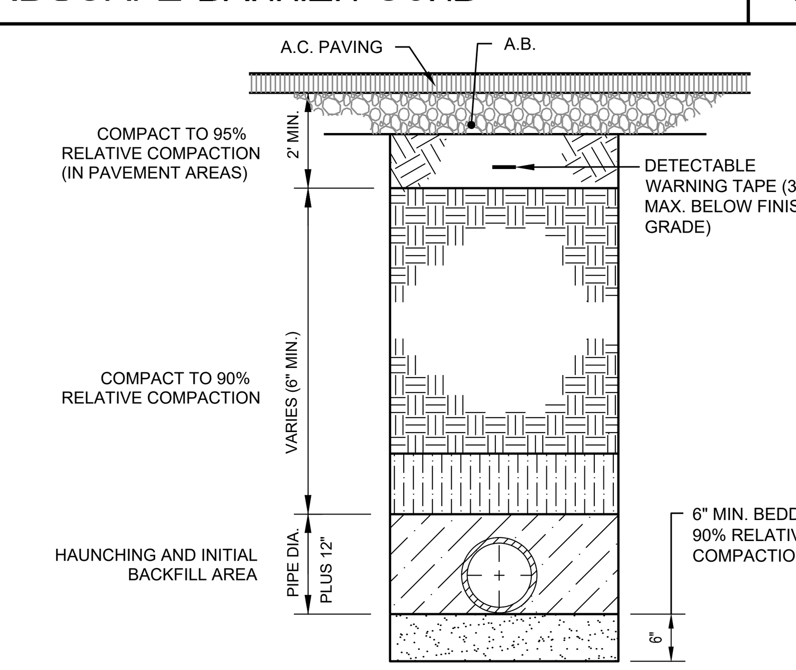

NOTES:
1. BACKFILL TO A DEPTH OF 12" OVER TOP OF PIPE, FILL SHALL BE PLACED BY HAND AND TAMPED (90% REL. COMPACTION). FOR PLASTIC PIPE INSTALLATIONS, BEDDING SHALL BE IN ACCORDANCE W/PIPE MANUF. SPECIFICATIONS.
2. BACKFILL MATERIAL WITHIN THE HAUNCHING, INITIAL BACKFILL, AND OUTER BEDDING AREAS SHALL BE CATEGORY I, II, OR III MATERIAL (ASTM D2321) PLACED TO 90% REL. COMPACTION.
5. SEE PROJECT SPECIFICATION AND GEOTECHNICAL INVESTIGATION REPORT BY SOILS ENGINEERING, INC. (SEI FILE 22-18633, DATED JANUARY 13, 2023) FOR ADDITIONAL BACKFILL REQUIREMENTS.

(ON SITE)

TRENCH BACKFILL AND PAVING — NO SCALE — 13

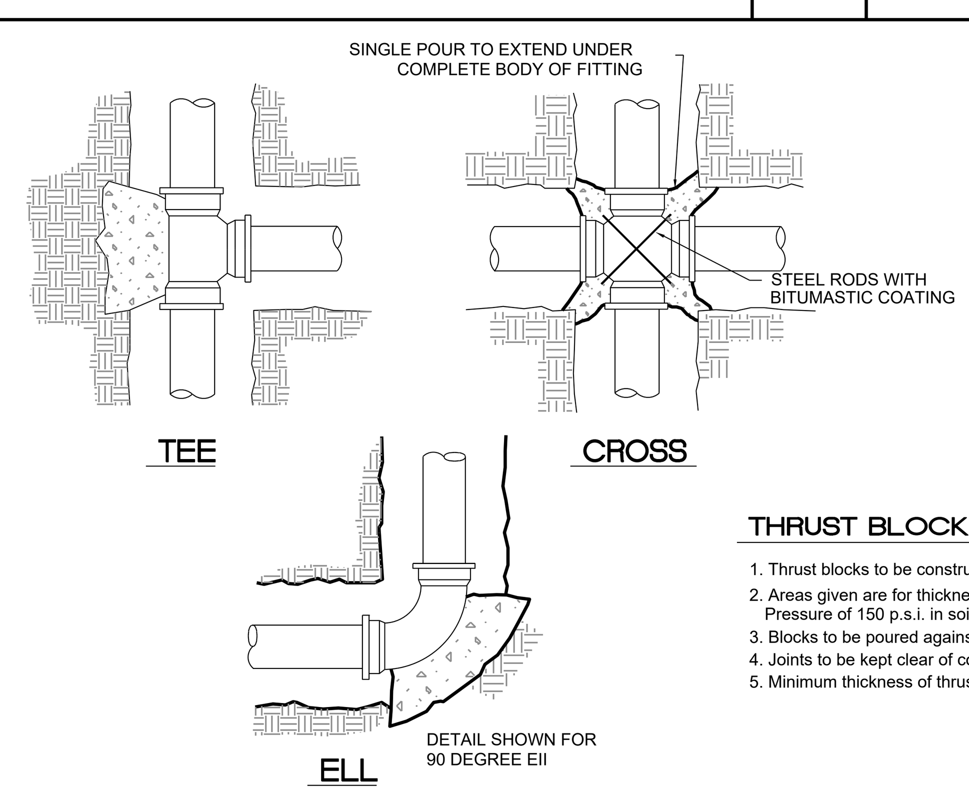

THRUST BLOCK REQUIRED BEARING AREA – TOTAL SQUARE FEET						
TYPE OF FITTING		ELL			TEE & CAPS	CROSS
		22-1/2°	45°	90°		
SIZE OF PIPE	4"	1	2	3	2	3
	6"	1	2	4	3	4
	8"	2	4	7	5	7
	10"	3	6	12	8	12

THRUST BLOCK NOTES:

1. Thrust blocks to be constructed of Class 3 concrete.
2. Areas given are for thickness class 50 ductile iron pipe at Pressure of 150 p.s.i. in soil with 2,000 p.s.f. bearing capacity.
3. Blocks to be poured against undisturbed native soil.
4. Joints to be kept clear of concrete.
5. Minimum thickness of thrust blocks to be 6 inches.

CONCRETE THRUST BLOCK — NO SCALE — 34

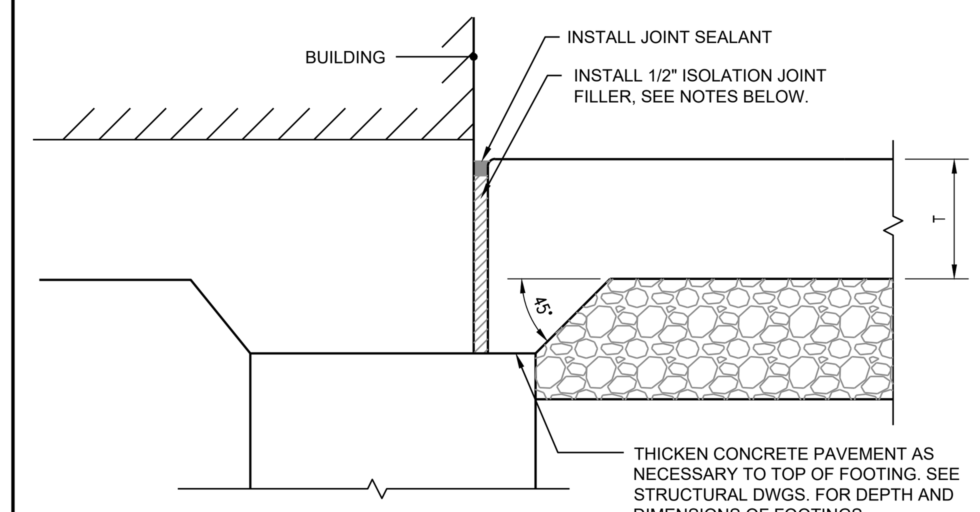

NOTES:
1. ISOLATION JOINT FILLER SHALL MEET THE REQUIREMENTS OF ASTM D 1751, ASPHALT-SATURATED CELLULOSIC FIBER IN PRE-FORMED STRIPS.
2. EXTEND JOINT FILLERS FULL WIDTH AND DEPTH OF JOINT.
3. TERMINATE JOINT FILLER NOT LESS THAN 1/2 INCH OR MORE THAN 1 INCH BELOW FINISHED SURFACE IF JOINT SEALANT IS INDICATED.
4. PLACE TOP OF JOINT FILLER FLUSH WITH FINISHED CONCRETE SURFACE IF JOINT SEALANT IS NOT INDICATED.
5. INSTALL ISOLATION JOINTS AT ALL LOCATIONS WHERE EXTERIOR CONCRETE PAVEMENT ABUTS BUILDING CONCRETE.

ISOLATION JOINT AT BUILDING — NO SCALE — 14

rrm design group
rrmdesign.com | (805) 543-1794
3765 SOUTH HIGUERA STREET, SUITE 102
SAN LUIS OBISPO, CA 93401

THE INCLUDED DRAWINGS, SPECIFICATIONS, IDEAS, DESIGNS AND ARRANGEMENTS REPRESENTED THEREBY ARE AND SHALL REMAIN THE PROPERTY OF RRM DESIGN GROUP AND NO PART THEREOF SHALL BE COPIED, DISCLOSED TO OTHERS OR USED IN CONNECTION WITH ANY WORK OR PROJECT OTHER THAN THE SPECIFIED PROJECT FOR WHICH THEY HAVE BEEN PREPARED AND DEVELOPED WITHOUT THE WRITTEN CONSENT OF RRM DESIGN GROUP. VISUAL CONTACT WITH THESE DRAWINGS OR SPECIFICATIONS SHALL CONSTITUTE CONCLUSIVE EVIDENCE OF ACCEPTANCE OF THESE RESTRICTIONS. SUBMITTAL OF THESE DOCUMENTS FOR PUBLIC AGENCY REVIEW SHALL NOT BE CONSIDERED A WAIVER OF RRM DESIGN GROUP'S RIGHTS.
RRM DESIGN GROUP COPYRIGHT 2023.
RRM IS A CALIFORNIA CORPORATION

CONSULTANT

AGENCY

FOURTH ST COMMUNITY CENTER AND PARK
HENDERSON AVE., PORTERVILLE, CA 93257
SITE DEVELOPMENT DETAILS

NO.	REVISION	DATE
1	PLAN CHEK REVISION 1	5/17/24

PLAN CHECK REVISION 1

PROJECT MANAGER: LANCE WIERSCHEM
DRAWN BY: W.V. — CHECKED BY: A.P.O.
DATE: 2024.01.15
PROJECT NUMBER: 2883-01-RC22
SHEET: AS701

LANE PROJECT NO. 22306

NOTE:
1. CONTRACTOR SHALL CONTACT AUTHORITIES HAVING JURISDICATION AND VERIFY IMPOUNDMENT YARD INFORMATION.

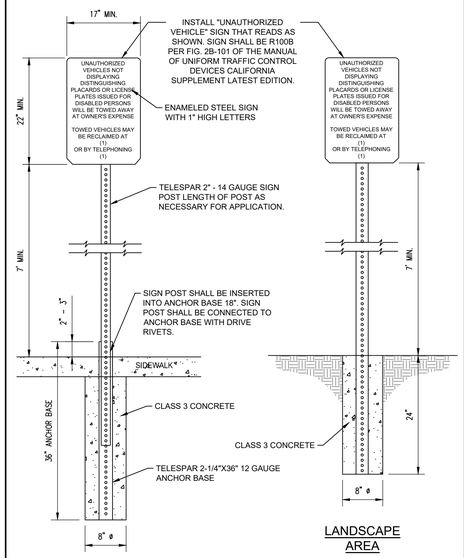

IN SIDEWALK

LANDSCAPE AREA

NOTE:
1. WHERE SIGN IS LOCATED NEAR DRIVE AISLES AND ENTRANCES SIGN SHALL BE A MINIMUM OF 3' AWAY FROM ANY CURB FACE OR EDGE OF A TRAVELED WAY.

UNAUTHORIZED VEHICLE SIGN — NO SCALE — 42

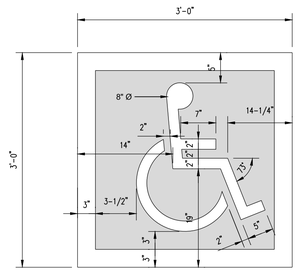

COLOR OF SYMBOL. THE SYMBOL SPECIFIED ABOVE SHALL CONSIST OF A WHITE FIGURE ON A BLUE BACKGROUND. THE BLUE SHALL BE EQUAL TO COLOR NO. 15090 IN FEDERAL STANDARD 599B.

PARKING SPACE EMBLEM — NO SCALE — 31

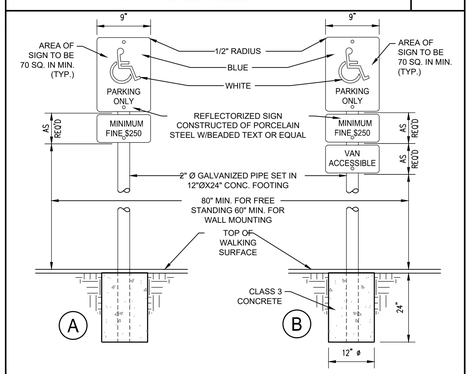

ACCESSIBILITY SIGN — NO SCALE — 32

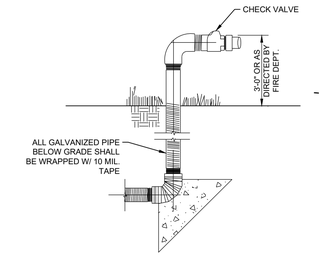

SECTION A-A
NO SCALE

NOTE:
*PUMPER CONNECTION SHALL BE NO MORE THAN 50' FROM FIRE HYDRANT.

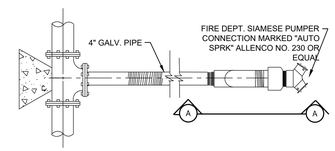

PLAN VIEW
NO SCALE

FDC CONNECTION — NO SCALE — 22

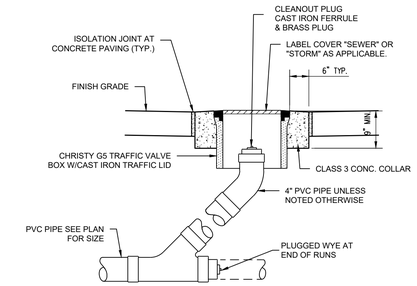

NOTE: CONCRETE COLLAR MAY BE OMITTED IN PLANTER AREAS

CLEANOUT TO GRADE — NO SCALE — 11

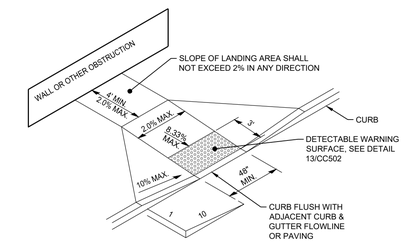

CURB CUT RAMP

NOTES:
1. RAMP CONCRETE SHALL HAVE A MINIMUM THICKNESS OF 4".

ACCESSIBIITY RAMP — NO SCALE — 12

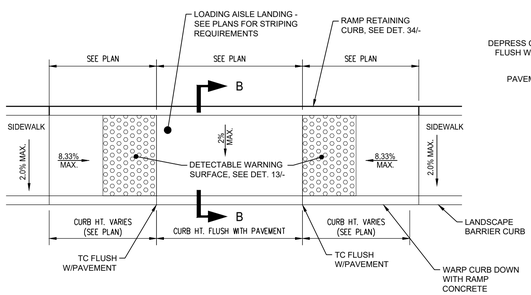

PASSENGER DROP-OFF AND LOADING AISLE — NO SCALE — 33

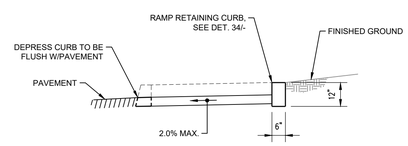

SECTION B-B

NOTES:
1. RAMP CONCRETE SHALL HAVE A MINIMUM THICKNESS OF 4".
2. ALL VISIBLE EDGES OF RETAINING CURB SHALL HAVE 1/2" RADII.
3. SEE GRADING PLAN SHEETS FOR GRADES.
4. THE LANDING SHALL BE LESS THAN 2.0% IN ANY DIRECTION.

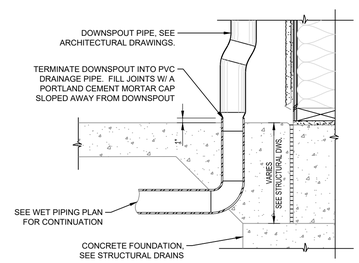

DOWNSPOUT CONNECTION — NO SCALE — 23

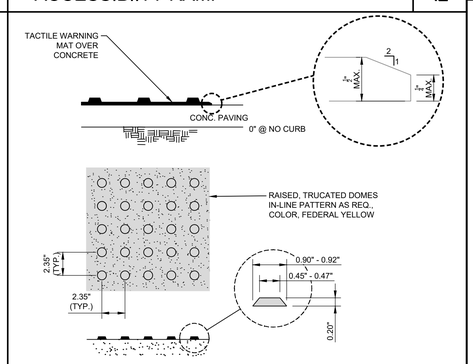

TACTILE WARNING MAT — NO SCALE — 13

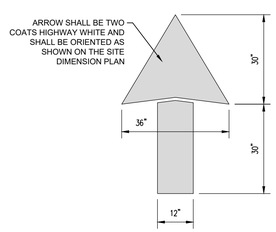

NOTE:
1. PAVEMENT ARROW SHOWN ABOVE SHALL BE USED OR APPROVED EQUAL.

NO SCALE

DIRECTIONAL PAVEMENT ARROW — 44

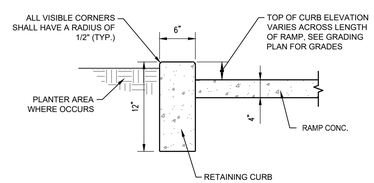

NOTES:
1. ALL CONCRETE SHALL BE 2500 PSI MIN. AT 28 DAYS
2. SEE GRADING PLAN FOR GRADES.

RAMP RETAINING CURB — NO SCALE — 34

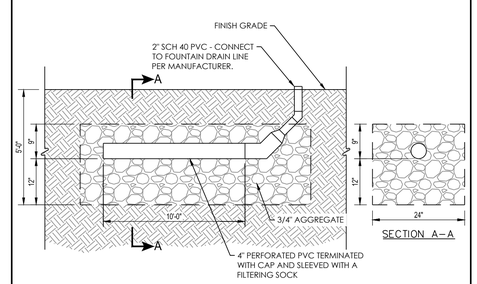

DRAIN AT DRINKING FOUNTAIN — NO SCALE — 24

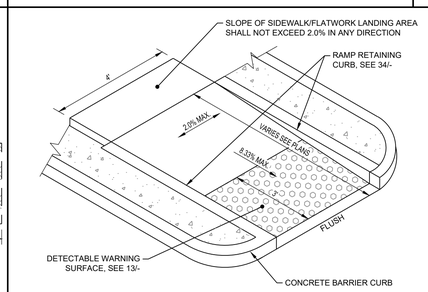

NOTES:
1. RAMP CONCRETE SECTION SHALL HAVE MINIMUM THICKNESS OF 4"
2. LANDING SHALL BE 4' MIN. IN THE DIRECTION OF TRAVEL ABOVE THE RAMP.
3. SEE GRADING PLAN FOR GRADES.

ACCESSIBIITY RAMP — NO SCALE — 14

rrm design group
rrmdesign.com | (805) 543-1794
3765 SOUTH HIGUERA STREET, SUITE 102
SAN LUIS OBISPO, CA 93401

THE INCLUDED DRAWINGS, SPECIFICATIONS, IDEAS, DESIGNS AND ARRANGEMENTS REPRESENTED THEREIN ARE AND SHALL REMAIN THE PROPERTY OF RRM DESIGN GROUP AND NO PART THEREOF SHALL BE COPIED, DISCLOSED TO OTHERS OR USED IN CONNECTION WITH ANY WORK OR PROJECT OTHER THAN THE SPECIFIED PROJECT FOR WHICH THEY HAVE BEEN PREPARED AND DEVELOPED WITHOUT THE WRITTEN CONSENT OF RRM DESIGN GROUP. VISUAL CONTACT WITH THESE DRAWINGS OR OTHERWISE RECEIVING THESE DOCUMENTS SHALL ESTABLISH CONFIDENCE AND RESTRICTIONS. SUBMITTAL OF THESE DOCUMENTS FOR PUBLIC AGENCY REVIEW SHALL NOT BE CONSIDERED A WAIVER OF RRM DESIGN GROUP'S RIGHTS.
RRM DESIGN GROUP COPYRIGHT 2023.
RRM IS A CALIFORNIA CORPORATION

REGISTERED PROFESSIONAL ENGINEER — WA VANG — C.E. 80967 — 08/30/2024 — CIVIL — STATE OF CALIFORNIA

CONSULTANT

AGENCY

FOURTH ST COMMUNITY CENTER AND PARK
HENDERSON AVE., PORTERVILLE, CA 93257

SITE DEVELOPMENT DETAILS

NO.	REVISION	DATE
1	PLAN CHEK REVISION 1	5/17/24

PLAN CHECK REVISION 1

PROJECT MANAGER: LANCE WIERSCHEM
DRAWN BY: W.V.
CHECKED BY: A.P.O.
DATE: 2024.01.15
PROJECT NUMBER: 2883-01-RC22
SHEET: AS702

LANE PROJECT NO. 22306

J:\Jobs\2022\22306\Dwg\Production Drawings\C7_Details.dwg, AS702, Aug 30, 2024 1:13pm, wa

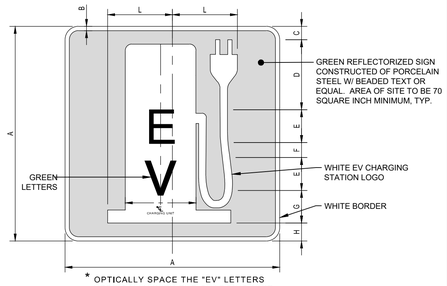

A	B	C	D	E	F	G	H	J	K	L
12	0.375	0.75	3.875	2EM	0.875	1.5	1	10.25	1.5	3.625

COLORS: BORDERS & SYMBOL - WHITE (RETROREFLECTIVE)
LEGEND & BACKGROUND - GREEN (RETROREFLECTIVE)

ENLARGED EV PARKING SIGN NO SCALE 41

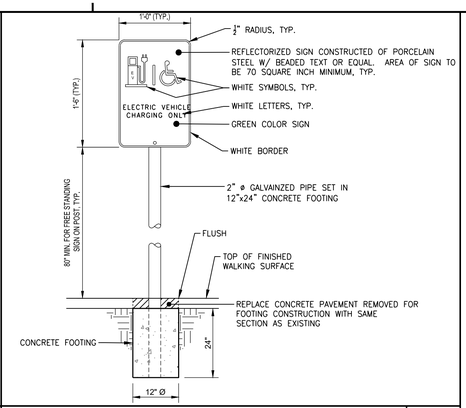

EV ACCESSIBLE PARKING SIGN NO SCALE 31

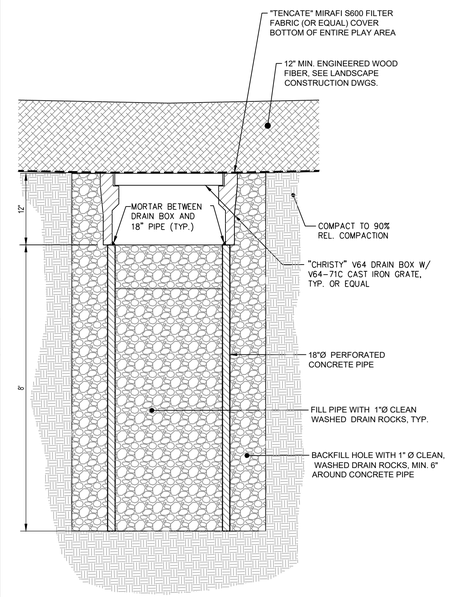

PLAY AREA DRY-WELL NO SCALE 22

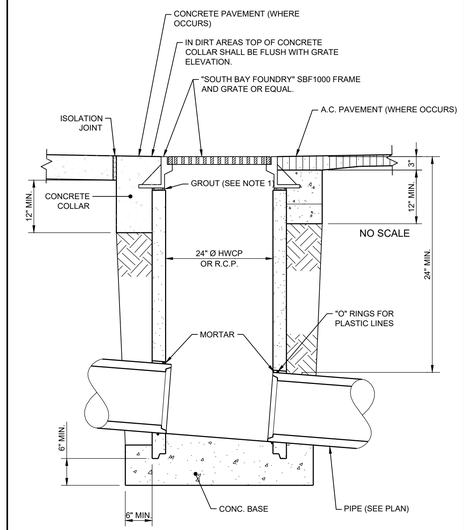

NOTES
1. GROUT SHALL BE A HIGH STRENGTH, SHRINKAGE COMPENSATING NON-METALLIC GROUT, "MASTERFLOW" 713 OR EQUAL.
2. CONCRETE SHALL BE 2500 PSI MIN. AT 28 DAYS.
3. FRAME AND GRATE SHALL MEET H20 WHEEL LOAD REQUIREMENTS.

DRAIN INLET NO SCALE 12

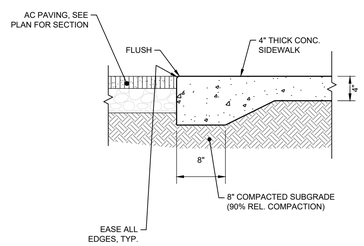

NO SCALE

SECTION AT NEW AC PAVING/CONCRETE 42

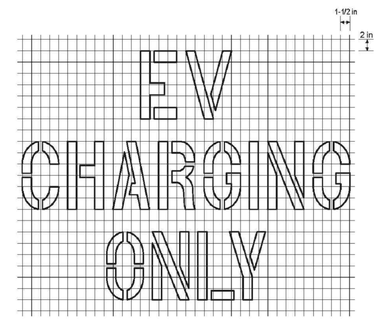

EV PARKING SPACE MARKING NO SCALE 32

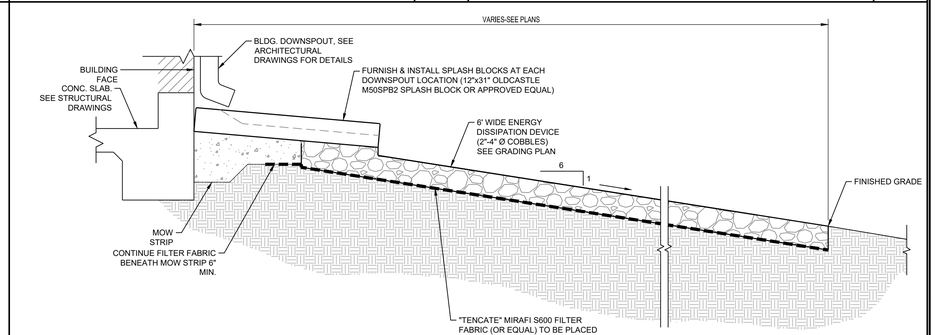

DOWNSPOUT SPLASH BLOCK & ENERGY DISSIPATION DEVICE NO SCALE 13

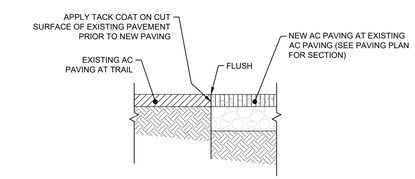

NEW AC PAVING AT EXISTING NO SCALE 43

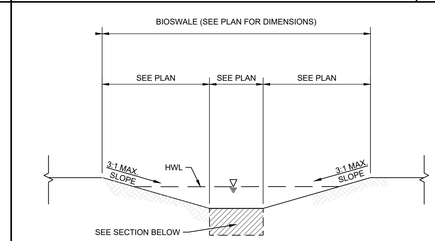

CROSS SECTION

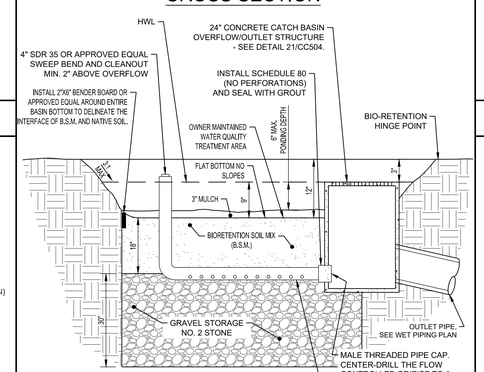

NOTES:
1. BIORETENTION SOIL MIX (B.S.M) SHALL BE 60 TO 70% SAND, 15 TO 25% COMPOST
2. STONE MATERIAL SHALL BE WASHED, OPEN-GRADED (NO SAND), CRUSHED (ANGULAR) AGGREGATE
3. NATIVE SOIL BENEATH INFILTRATION BED SHALL BE OVER-EXCAVATED A MINIMUM OF 1.0' AND REPLACED UNIFORMLY WITHOUT COMPACTION
4. INSTALL BENDER BOARD WITH 12" REDWOOD STAKE, ON B.S.M. SIDE, AT 4' CENTERS. SPLICE BENDER BOARD WITH 1"X4"X24" SPLICE BOARD. PROVIDE 2" OF EXPOSED BENDER BOARD ABOVE B.S.M.

BIORETENTION SECTION NO SCALE 34

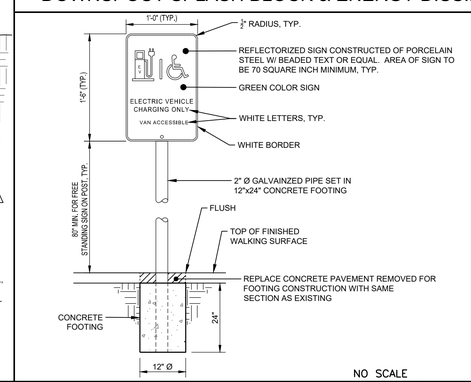

NO SCALE

"VAN ACCESSIBLE" EV PARKING SIGN 24

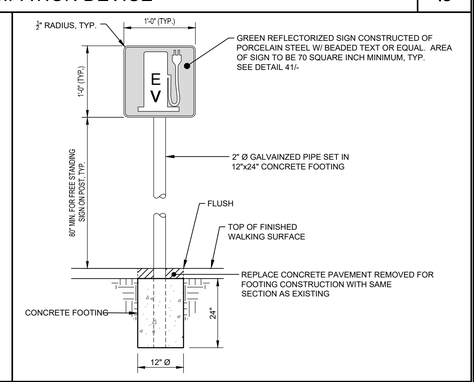

TYPICAL EV PARKING SIGN NO SCALE 14

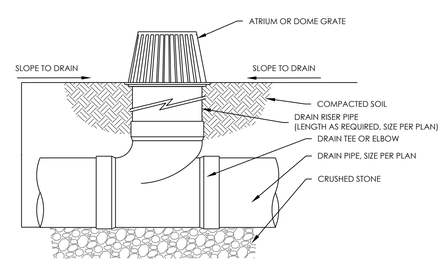

ATRIUM DOME GRATE NO SCALE 44

rrm design group
rrmdesign.com | (805) 543-1794
3765 SOUTH HIGUERA STREET, SUITE 102
SAN LUIS OBISPO, CA 93401

THE INCLUDED DRAWINGS, SPECIFICATIONS, IDEAS, DESIGNS AND ARRANGEMENTS REPRESENTED THEREBY ARE AND SHALL REMAIN THE PROPERTY OF RRM DESIGN GROUP AND NO PART THEREOF SHALL BE COPIED, DISCLOSED TO OTHERS OR USED IN CONNECTION WITH ANY WORK OR PROJECT OTHER THAN THE SPECIFIED PROJECT FOR WHICH THEY HAVE BEEN PREPARED AND DEVELOPED WITHOUT THE WRITTEN CONSENT OF RRM DESIGN GROUP. VISUAL CONTACT WITH THESE DRAWINGS OR SPECIFICATIONS SHALL CONSTITUTE PROOF OF ACCEPTANCE OF THE ABOVE RESTRICTIONS. SUBMITTAL OF THESE DOCUMENTS FOR PUBLIC AGENCY REVIEW SHALL NOT BE CONSIDERED A WAIVER OF RRM DESIGN GROUP'S RIGHTS.
RRM DESIGN GROUP COPYRIGHT 2023.
RRM IS A CALIFORNIA CORPORATION

REGISTERED PROFESSIONAL ENGINEER
WA VANG
C 90967
08/30/2024
CIVIL
STATE OF CALIFORNIA

CONSULTANT

AGENCY

FOURTH ST COMMUNITY CENTER AND PARK
HENDERSON AVE., PORTERVILLE, CA 93257

SITE DEVELOPMENT DETAILS

NO.	REVISION	DATE
1	PLAN CHEK REVISION 1	5/17/24

PLAN CHECK REVISION 1

PROJECT MANAGER
LANCE WIERSCHEM

DRAWN BY	CHECKED BY
W.V.	A.P.O.

DATE
2024.01.15

PROJECT NUMBER
2883-01-RC22

SHEET
AS703

LANE PROJECT NO. 22306

J:\Jobs\2022\22306\Dwg\Production Drawings\C7_Details.dwg, AS703, Aug 30, 2024 1:13pm, wa

NOT USED

41

NOT USED

31

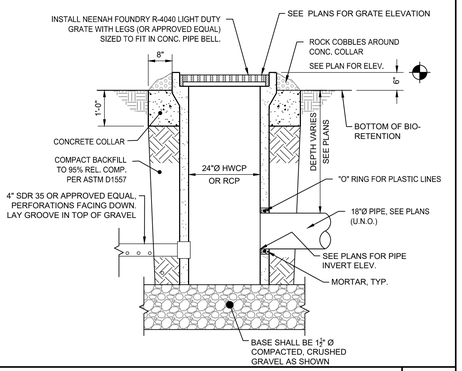

BIOSWALE OVERFLOW INLET NO SCALE 21

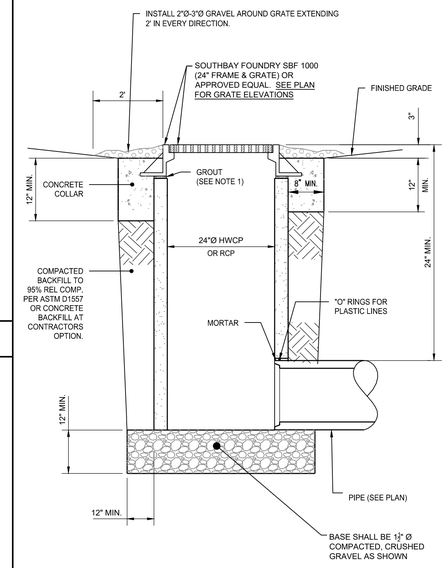

NOTES:

1. GROUT SHALL BE A HIGH STRENGTH, SHRINKAGE COMPENSATING, NON-METALLIC GROUT, "MASTERFLOW" 713 OR EQUAL.
2. CONCRETE SHALL BE CLASS 2,500 PSI MIN. AT 28 DAYS.

BIOSWALE DRAIN INLET NO SCALE 12

NOT USED

42

NOT USED

32

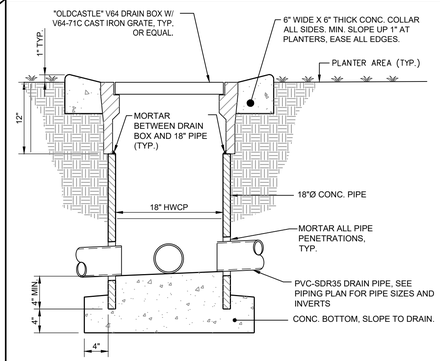

PLANTER DRAIN INLET NO SCALE 22

NOT USED

43

NOT USED

33

NOT USED

23

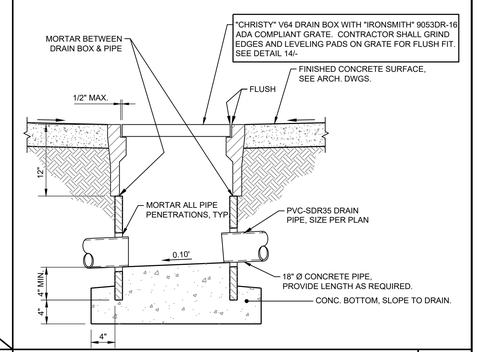

AREA DRAIN INLET W/ ADA GRATE NO SCALE 13

NOT USED

44

NOT USED

34

NOT USED

24

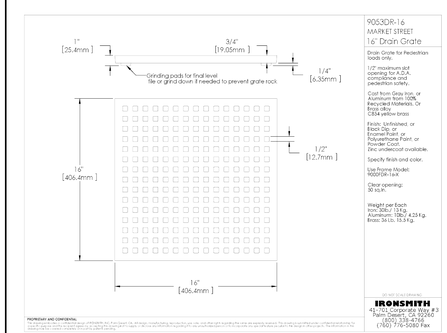

ADA COMPLIANT DI GRATE NO SCALE 14

PLAN CHECK REVISION 1

rrm design group

rrmdesign.com | (805) 543-1794
3765 SOUTH HIGUERA STREET, SUITE 102
SAN LUIS OBISPO, CA 93401

THE INCLUDED DRAWINGS, SPECIFICATIONS, IDEAS, DESIGNS AND ARRANGEMENTS REPRESENTED THEREBY ARE AND SHALL REMAIN THE PROPERTY OF RRM DESIGN GROUP AND NO PART THEREOF SHALL BE COPIED, DISCLOSED TO OTHERS OR USED IN CONNECTION WITH ANY WORK OR PROJECT OTHER THAN THE SPECIFIED PROJECT FOR WHICH THEY HAVE BEEN PREPARED AND DEVELOPED WITHOUT THE WRITTEN CONSENT OF RRM DESIGN GROUP. VISUAL CONTACT WITH THESE DRAWINGS OR OTHER PROJECT DOCUMENTS SHALL CONSTITUTE PROOF OF ACCEPTANCE OF THESE RESTRICTIONS. SUBMITTAL OF THESE DOCUMENTS FOR PUBLIC AGENCY REVIEW SHALL NOT BE CONSIDERED A WAIVER OF RRM DESIGN GROUP'S RIGHTS.
RRM DESIGN GROUP COPYRIGHT 2023.
RRM IS A CALIFORNIA CORPORATION

REGISTERED PROFESSIONAL ENGINEER
WA VANG
R.C.E. 80967
08/30/2024
CIVIL
STATE OF CALIFORNIA

CONSULTANT

AGENCY

FOURTH ST COMMUNITY CENTER AND PARK

HENDERSON AVE., PORTERVILLE, CA 93257

SITE DEVELOPMENT DETAILS

NO.	REVISION	DATE
1	PLAN CHEK REVISION 1	5/17/24

PROJECT MANAGER
LANCE WIERSCHEM

DRAWN BY	CHECKED BY
W.V.	A.P.O.

DATE
2024.01.15

PROJECT NUMBER
2883-01-RC22

SHEET
AS704

LANE PROJECT NO. 22306

J:\Jobs\2022\22306\Dwg\Production Drawings\C7_Details.dwg, AS704, Aug 30, 2024 1:13pm, wa

J:\Jobs\2022\22306\Dwg\Production Drawings\C7_Details.dwg, AS704, Aug 30, 2024 1:13pm, wa

1 GROUND FLOOR PLAN

A201 A101 SCALE: 3/32" = 1'-0"

FLOOR PLAN GENERAL NOTES

1. REFER TO GENERAL NOTES SHEET G-101 FOR ADDITIONAL REQUIREMENTS.
2. REFER TO SHEET A921 FOR WALL TYPES
3. REFER TO STRUCTURAL PLANS FOR FURTHER INFORMATION.
4. REFER TO ELECTRICAL PLANS FOR FURTHER INFORMATION IF PROVIDED.
5. REFER TO MECHANICAL PLANS, DRAWINGS OR REPORTS FOR FURTHER INFORMATION.
6. REFER TO PLUMBING PLANS OR DRAWINGS FOR FURTHER INFORMATION IF PROVIDED.
7. ALL FURNITURE AND EQUIPMENT IS BY OWNER AND IS SHOWN FOR COORDINATION PURPOSES ONLY.
8. ALL CASEWORK SHALL BE PROVIDED BY CONTRACTOR
9. INTERIOR WALL DIMENSIONS ARE TO FACE OF FRAMING UNLESS SPECIFICALLY NOTED OTHERWISE.
10. EXTERIOR DIMENSIONS ARE TO FACE OF SHEATHING UNLESS SPECIFICALLY NOTED OTHERWISE
11. PROVIDE ADEQUATE BLOCKING IN WALLS FOR CABINETS AND OTHER WALL MOUNTED ACCESSORIES INCLUDING BUT NOT LIMITED TO HANDRAILS, SHELVING AND BATHROOM FIXTURES.
12. PROVIDE FIREBLOCKING FOR WALL CAVITIES THAT EXCEED **2022 CBC** HEIGHT LIMITATIONS
13. DOOR AND WINDOW DIMENSIONS ARE CENTERED AT OPENINGS
14. WHERE DOOR IS LOCATED WITHOUT DIMENSION AT THE CORNER OF A ROOM IT SHALL BE 4" FROM FACE OF FRAMING OF ADJACENT WALL TO ROUGH DOOR OPENING
15. SEE CODE ANALYSIS FOR LOCATIONS OF FIRE PARTITIONS AND FIRE BARRIERS
16. WHERE RECESSED FIXTURES OCCUR IN WALLS OR HORIZONTAL ASSEMBLIES, THE FIRE RATING OF THOSE ASSEMBLIES SHALL BE MAINTAINED
17. AT ALL PENETRATIONS AND INTERSECTIONS OF FIRE-RATED PARTITIONS, PROVIDE FIRE SEALANT AND/OR FIRE STOPPING TO MAINTAIN CONTINUITY OF PARTITION RATING

KEYNOTES

05 1200.A	STEEL COLUMN. REFER TO STRUCTURAL DRAWINGS
05 5133.A	INTERIOR METAL LADDER. REFER TO DETAIL 44/A906
06 1000.C	WALL FRAMING PER STRUCTURAL AND WALL LEGEND
06 1000.D	COLUMN REFER TO STRUCTURAL
06 1000.E	PROVIDE BLOCKING FOR OWNER PROVIDED WALL-MOUNTED TV BRACKET. COORDINATE LOCATION W/OWNER.
08 4313.A	ALUMINUM STOREFRONT SYSTEM - REFER TO SCHEDULES.
08 4500.A	TRANSLUCENT WALL PANEL
09 6800	CARPETING
09 9000.E	STAINED WOOD TRELLIS.
10 4400.C	RECESSED FIRE EXTINGUISHER CABINET WITH EXTINGUISHER, 2A:10B:C RATING PER DETAIL 41/A-941
11 6623.A	BASKETBALL HOOP AND BACKBOARD REFER TO DETAILS 6-8/S105
11 6623.B	FLOOR SLEEVES FOR VOLLEYBALL NET POST
12 6613.A	TELESCOPING BLEACHERS
22 0000.O	HI LOW DRINKING FOUNTAIN WITH BOTTLE FILLER.

LEGEND

A6	**EXTERIOR WALL**- 2X6 WOOD STUD W/ PLYWOOD SHEATHING, RIGID INSULATION AND 1-1/2" METAL PANEL FINISH, ONE LAYER GYPSUM WALL BOARD INTERIOR.
A8	**EXTERIOR WALL**- 2X8 WOOD STUD W/ PLYWOOD SHEATHING, RIGID INSULATION AND 1-1/2" METAL PANEL FINISH, ONE LAYER GYPSUM WALL BOARD INTERIOR.
B	**EXTERIOR WALL** - 2X6 WOOD STUD W/ PLYWOOD SHEATHING, RIGID INSULATION AND FIBER-CEMENT BOARD ARCHITECTURAL , ONE LAYER OF GYPSUM WALL BOARD INTERIOR.
E4	**INTERIOR**- 2X4 WOOD STUD. REFER TO FINISH PLAN FOR WALL FINISH
E6	**INTERIOR**- 2X6 FRAMING WOOD STUD. REFER TO FINISH PLAN FOR WALL FINISH
E8	**INTERIOR**- 2X8 FRAMING WOOD STUD. REFER TO FINISH PLAN FOR WALL FINISH
F4	**INTERIOR**- 2X4 WOOD STUD FURRED. REFER TO FINISH PLAN FOR WALL FINISH
F6	**INTERIOR**- 2X6 WOOD STUD FURRED. REFER TO FINISH PLAN FOR WALL FINISH
F6P	**INTERIOR**- 2X6 WOOD STUD FURRED WITH PADDING REFER TO FINISH PLAN FOR WALL FINISH
G6	**INTERIOR**- 2X6 FRAMING WOOD PARTY WALL STAGGERED STUD. REFER TO FINISH PLAN FOR WALL FINISH
Sx	STOREFRONT ASSEMBLY REFER TO DOOR WINDOW SCHEDULE FOR MORE INFORMATION
	INDICATES DEPRESSED SLAB REFER TO A501 - FINISH PLAN AND STRUCTURAL 6/S-101 FOR MORE INFORMATION

rrm design group
rrmdesign.com | (805) 543-1794
3765 SOUTH HIGUERA STREET SUITE 102
SAN LUIS OBISPO, CA 93401

THE INCLUDED DRAWINGS, SPECIFICATIONS, IDEAS, DESIGNS AND ARRANGEMENTS REPRESENTED THEREBY ARE AND SHALL REMAIN THE PROPERTY OF RRM DESIGN GROUP AND NO PART THEREOF SHALL BE COPIED, DISCLOSED TO OTHERS OR SUBSTANTIALLY USED FOR ANY PURPOSE WITHOUT THE PRIOR WRITTEN CONSENT OF THE PROJECT FOR WHICH THEY HAVE BEEN PREPARED AND DEVELOPED WITHOUT THE WRITTEN CONSENT OF RRM DESIGN GROUP. VISUAL CONTACT WITH THESE DRAWINGS OR SPECIFICATIONS SHALL CONSTITUTE CONCLUSIVE EVIDENCE OF ACCEPTANCE OF THESE RESTRICTIONS. SUBMITTAL OF PRELIMINARY DRAWINGS FOR REVIEW PURPOSES SHALL ALSO BE CONSIDERED A WAIVER OF RRMDESIGN GROUP'S RIGHTS.
RRM DESIGN GROUP COPYRIGHT 2022
RRM IS A CALIFORNIA CORPORATION

LICENSED ARCHITECT
MICHAEL SCOTT LUNDQUIST
C39678
10-31-25
RENEWAL DATE
STATE OF CALIFORNIA

CONSULTANT

AGENCY

FOURTH ST COMMUNITY CENTER AND PARK

HENDERSON AVE., PORTERVILLE, CA 93257

GROUND FLOOR PLAN

NO.	REVISION	DATE
1	PLAN CHECK REVISION 1	05/17/24
2	PLAN CHECK REVISION 2	09/17/24

PROJECT MANAGER TSL
DRAWN BY MC, NA, PM
CHECKED BY DD, KF
DATE 2024.09.17
PROJECT NUMBER 2883-01-RC22
SHEET A101

PLAN CHECK REVISION 2

9/20/2024 11:02:34 AM
Autodesk Docs://2883-01_Porterville Fourth St Community Center/2883-01-RC22_Porterville_v22.rvt

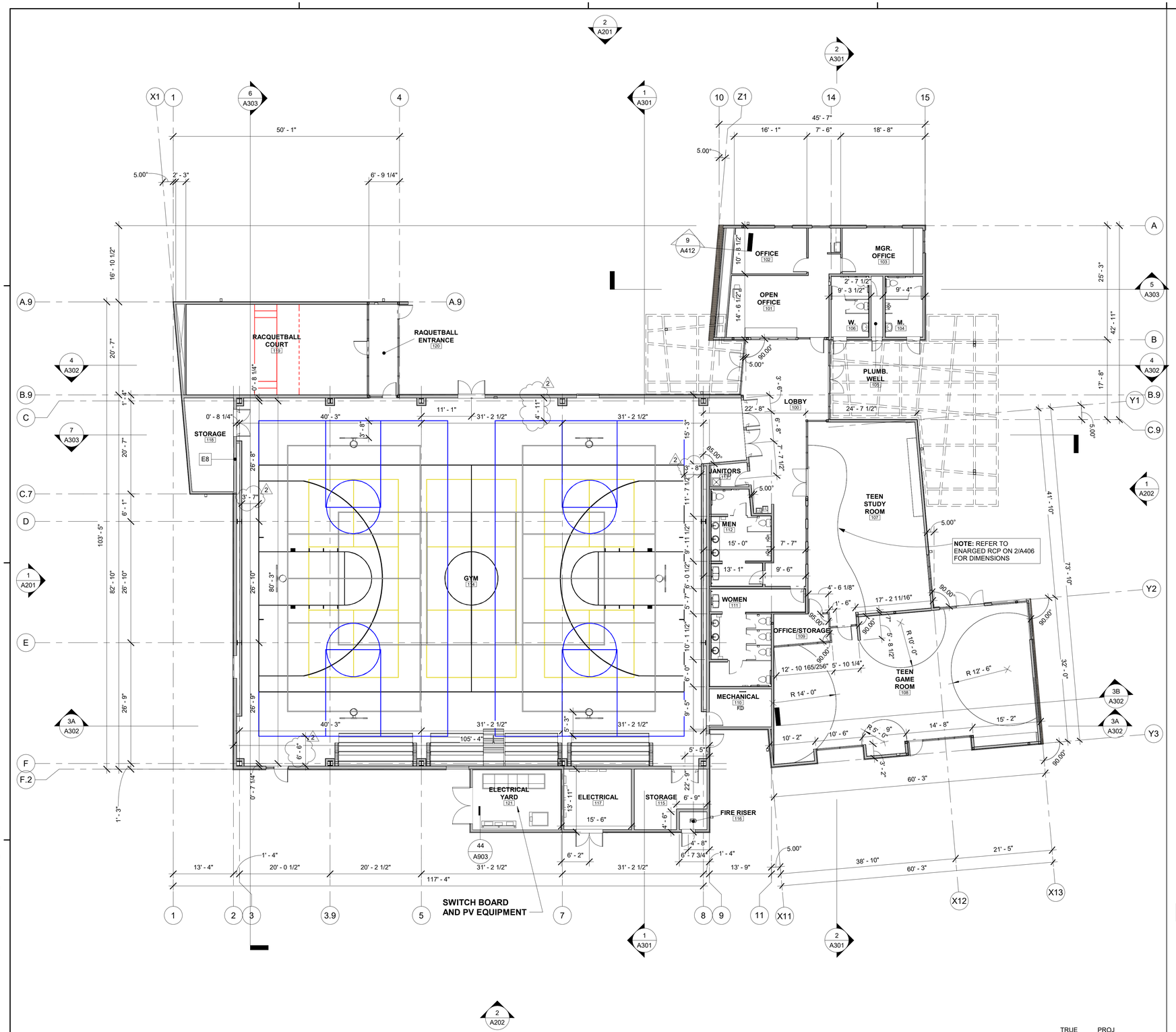

1 DIMENSIONED GROUND FLOOR PLAN

A201 | A102

SCALE: 3/32" = 1'-0"

FLOOR PLAN GENERAL NOTES

1. REFER TO GENERAL NOTES SHEET G-101 FOR ADDITIONAL REQUIREMENTS.
2. REFER TO SHEET A921 FOR WALL TYPES
3. REFER TO STRUCTURAL PLANS FOR FURTHER INFORMATION.
4. REFER TO ELECTRICAL PLANS FOR FURTHER INFORMATION IF PROVIDED.
5. REFER TO MECHANICAL PLANS, DRAWINGS OR REPORTS FOR FURTHER INFORMATION.
6. REFER TO PLUMBING PLANS OR DRAWINGS FOR FURTHER INFORMATION IF PROVIDED.
7. ALL FURNITURE AND EQUIPMENT IS BY OWNER AND IS SHOWN FOR COORDINATION PURPOSES ONLY.
8. ALL CASEWORK SHALL BE PROVIDED BY CONTRACTOR
9. INTERIOR WALL DIMENSIONS ARE TO FACE OF FRAMING UNLESS SPECIFICALLY NOTED OTHERWISE.
10. EXTERIOR DIMENSIONS ARE TO FACE OF SHEATHING UNLESS SPECIFICALLY NOTED OTHERWISE
11. PROVIDE ADEQUATE BLOCKING IN WALLS FOR CABINETS AND OTHER WALL MOUNTED ACCESSORIES INCLUDING BUT NOT LIMITED TO HANDRAILS, SHELVING AND BATHROOM FIXTURES.
12. PROVIDE FIREBLOCKING FOR WALL CAVITIES THAT EXCEED **2022 CBC** HEIGHT LIMITATIONS
13. DOOR AND WINDOW DIMENSIONS ARE CENTERED AT OPENINGS
14. WHERE DOOR IS LOCATED WITHOUT DIMENSION AT THE CORNER OF A ROOM IT SHALL BE 4" FROM FACE OF FRAMING OF ADJACENT WALL TO ROUGH DOOR OPENING
15. SEE CODE ANALYSIS FOR LOCATIONS OF FIRE PARTITIONS AND FIRE BARRIERS
16. WHERE RECESSED FIXTURES OCCUR IN WALLS OR HORIZONTAL ASSEMBLIES, THE FIRE RATING OF THOSE ASSEMBLIES SHALL BE MAINTAINED
17. AT ALL PENETRATIONS AND INTERSECTIONS OF FIRE-RATED PARTITIONS, PROVIDE FIRE SEALANT AND/OR FIRE STOPPING TO MAINTAIN CONTINUITY OF PARTITION RATING

LEGEND

A6	**EXTERIOR WALL**- 2X6 WOOD STUD W/ PLYWOOD SHEATHING, RIGID INSULATION AND 1-1/2" METAL PANEL FINISH, ONE LAYER GYPSUM WALL BOARD INTERIOR.
A8	**EXTERIOR WALL**- 2X8 WOOD STUD W/ PLYWOOD SHEATHING, RIGID INSULATION AND 1-1/2" METAL PANEL FINISH, ONE LAYER GYPSUM WALL BOARD INTERIOR.
B	**EXTERIOR WALL** - 2X6 WOOD STUD W/ PLYWOOD SHEATHING, RIGID INSULATION AND FIBER-CEMENT BOARD ARCHITECTURAL , ONE LAYER OF GYPSUM WALL BOARD INTERIOR.
E4	**INTERIOR**- 2X4 WOOD STUD. REFER TO FINISH PLAN FOR WALL FINISH
E6	**INTERIOR**- 2X6 FRAMING WOOD STUD. REFER TO FINISH PLAN FOR WALL FINISH
E8	**INTERIOR**- 2X8 FRAMING WOOD STUD. REFER TO FINISH PLAN FOR WALL FINISH
F4	**INTERIOR**- 2X4 WOOD STUD FURRED. REFER TO FINISH PLAN FOR WALL FINISH
F6	**INTERIOR**- 2X6 WOOD STUD FURRED. REFER TO FINISH PLAN FOR WALL FINISH
F6P	**INTERIOR**- 2X6 WOOD STUD FURRED WITH PADDING REFER TO FINISH PLAN FOR WALL FINISH
G6	**INTERIOR**- 2X6 FRAMING WOOD PARTY WALL STAGGERED STUD. REFER TO FINISH PLAN FOR WALL FINISH
Sx	STOREFRONT ASSEMBLY REFER TO DOOR WINDOW SCHEDULE FOR MORE INFORMATION
	INDICATES DEPRESSED SLAB REFER TO A501 - FINISH PLAN AND STRUCTURAL 6/S-101 FOR MORE INFORMATION

rrm design group
rrmdesign.com | (805) 543-1794
3765 SOUTH HIGUERA STREET SUITE 102
SAN LUIS OBISPO, CA 93401

THE INCLUDED DRAWINGS, SPECIFICATIONS, IDEAS, DESIGNS AND ARRANGEMENTS REPRESENTED THEREBY ARE AND SHALL REMAIN THE PROPERTY OF RRM DESIGN GROUP AND NO PART THEREOF SHALL BE COPIED, DISCLOSED TO OTHERS OR SUBSTANTIALLY USED FOR ANY PURPOSE WITHOUT THE WRITTEN CONSENT OF THE PROJECT FOR WHICH THEY HAVE BEEN PREPARED AND DEVELOPED WITHOUT THE WRITTEN CONSENT OF RRM DESIGN GROUP. VISUAL CONTACT WITH THESE DRAWINGS OR SPECIFICATIONS SHALL CONSTITUTE CONCLUSIVE EVIDENCE OF ACCEPTANCE OF THESE RESTRICTIONS. SUBMITTAL OF PRELIMINARY DRAWINGS FOR REVIEW SHALL NOT BE CONSIDERED A WAIVER OF RRM DESIGN GROUP'S RIGHTS.
RRM DESIGN GROUP COPYRIGHT 2022
RRM IS A CALIFORNIA CORPORATION

LICENSED ARCHITECT
MICHAELE SCOTT LUPO
C39678
10-31-25
RENEWAL DATE
STATE OF CALIFORNIA

CONSULTANT

AGENCY

FOURTH ST COMMUNITY CENTER AND PARK
HENDERSON AVE., PORTERVILLE, CA 93257

DIMENSIONED FLOOR PLAN

NO.	REVISION	DATE
2	PLAN CHECK REVISION 2	09/17/24

PROJECT MANAGER TSL
DRAWN BY MC, NA, PM
CHECKED BY DD, KF
DATE 2024.09.17
PROJECT NUMBER 2883-01-RC22
SHEET A102

PLAN CHECK REVISION 2

9/20/2024 11:02:38 AM
Autodesk Docs://2883-01_Porterville Fourth St Community Center/2883-01-RC22_Porterville_v22.rvt

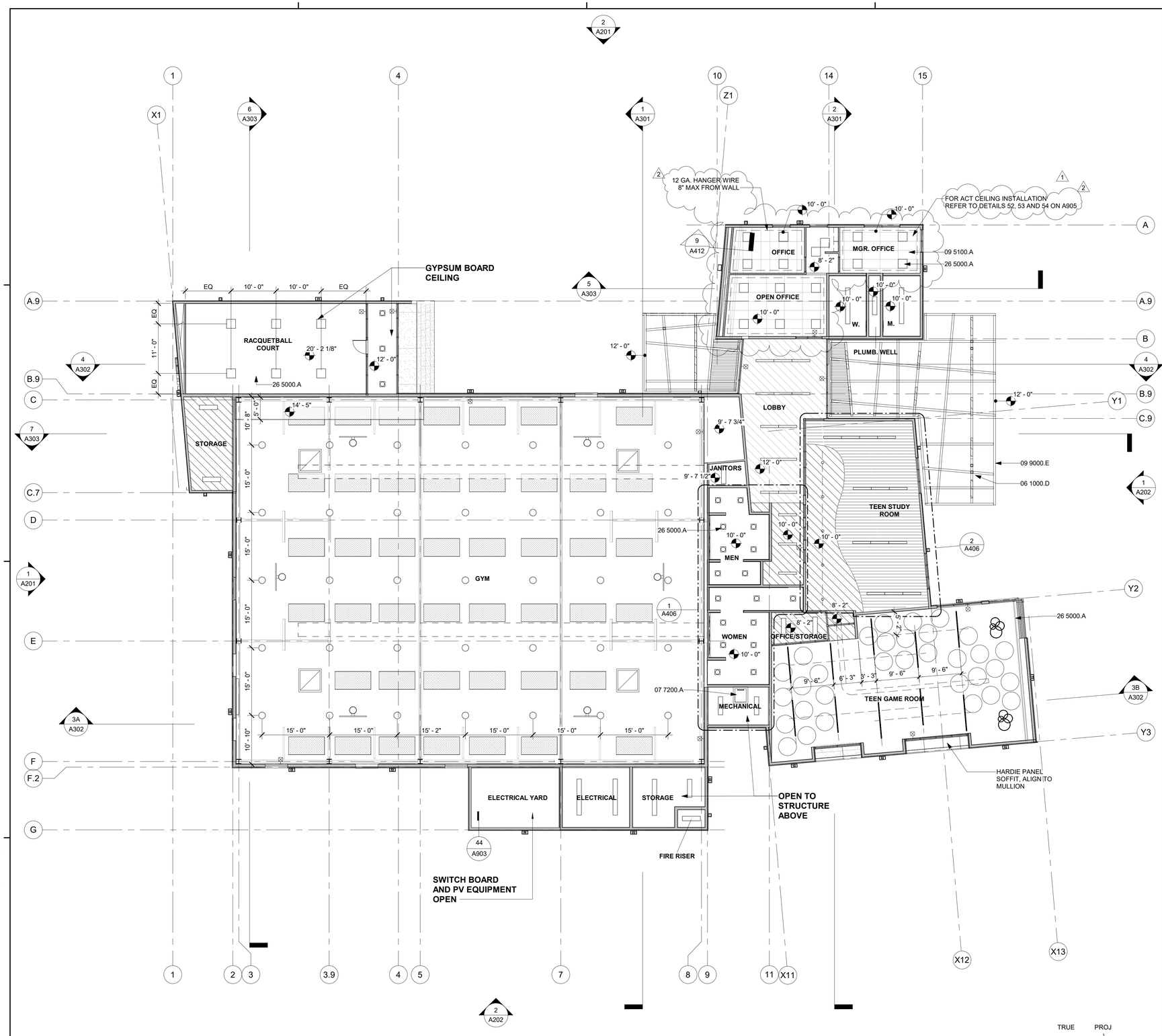

1 GROUND FLOOR RCP - OVERALL

A201 | A111 SCALE: 3/32" = 1'-0"

RCP GENERAL NOTES

1. REFER TO GENERAL NOTES SHEET G-100 FOR ADDITIONAL REQUIREMENTS.
2. REFER TO ELECTRICAL PLANS FOR FURTHER INFORMATION.
3. REFER TO MECHANICAL PLANS FOR FURTHER INFORMATION.
4. REFER TO DETAILS FOR FLOOR/CEILING ASSEMBLIES.
5. HEIGHT OF CEILINGS SHALL BE MEASURED FROM TOP OF SLAB TO FINISH FACE OF GWB OR FACE OF CEILING GRID AS INDICATED ON THE REFLECTED CEILING PLAN, UNO.
6. BORDERS AT LAY-IN ACOUSTICAL CEILING PANELS SHALL BE CUT TO MATCH FACTORY EDGE PROFILE. NO EXPOSED FASTENERS SHALL BE PERMITTED INCLUDING POP RIVETS AND TAPPETS.
7. CONTRACTOR TO VERIFY DEPTH OF SOFFITS AND HOLD TIGHT TO PLUMBING, SPRINKLERS, ELECTRICAL AND MECHANICAL DUCTS
8. SEE MECHANICAL DRAWINGS FOR MECH. ACCESS PANELS. PAINT TO MATCH CEILING
9. AT DROPPED GWB SOFFITS/GWB BEAMS, PROVIDE C-STUDS AS VERTICAL SUPPORTS AT EACH SIDE OF THE SOFFIT/BEAM AND DIAGONAL BRACING FOR WRACKING. IF CEILING JOIST SPACING DIFFERS FROM FLOOR THEN BLOCKING BETWEEN THE FLOOR FRAMING MAY BE UTILIZED TO ATTACH THE VERTICAL STRUTS
10. ALL LIGHT FIXTURES ARE TO BE INSTALLED ACCORDING TO THE ARCHITECTURAL REFLECTED CEILING PLAN. ARCHITECT TO REVIEW CEILING LAYOUT INCLUDING BULKHEADS AND GRID PRIOR TO INSTALLATION.
11. SEE ELECTRICAL PLANS FOR LIGHTING LOCATIONS AND SPECIFICATIONS, AND EXIT SIGN LOCATIONS.

KEYNOTES

06 1000.D	COLUMN REFER TO STRUCTURAL
07 7200.A	ROOF ACCESS HATCH
09 5100.A	ACOUSTICAL LAY-IN TILE CEILING
09 9000.E	STAINED WOOD TRELLIS.
26 5000.A	LIGHT FIXTURE. REFER TO ELECTRICAL

LEGEND

- XX'-X" CEILING HEIGHT (SEE PLAN FOR ACTUAL HEIGHTS)
- INTERIOR - GYPSUM BOARD CEILING
- INTERIOR - GYPSUM BOARD SOFFIT
- INTERIOR - ACOUSTICAL TILE CEILING
- INTERIOR - ACOUSTIC BLADES
- INTERIOR - TECTUM CIRECT-ATTACH CEILING PANELS 48" X 96"
- EXTERIOR - CEMENT PLASTER SOFFIT
- MECHANICAL EQUIPMENT, REFER TO MECHANICAL PLANS
- LIGHT FIXTURE, REFER TO ELECTRICAL PLANS
- ACCENT LIGHT, REFER TO ELECTRICAL PLANS
- ILLUMINATED EXIT SIGN, REFER TO ELECTRICAL PLANS

rrm design group
rrmdesign.com | (805) 543-1794
3765 SOUTH HIGUERA STREET SUITE 102
SAN LUIS OBISPO, CA 93401

THE INCLUDED DRAWINGS, SPECIFICATIONS, IDEAS, DESIGNS AND ARRANGEMENTS REPRESENTED THEREBY ARE AND SHALL REMAIN THE PROPERTY OF RRM DESIGN GROUP AND NO PART THEREOF SHALL BE COPIED, DISCLOSED TO OTHERS OR SUBSTANTIALLY USED FOR ANY PURPOSE WITHOUT THE PERMISSION OF RRM DESIGN GROUP. THE PROJECT FOR WHICH THEY HAVE BEEN PREPARED AND DEVELOPED WITHOUT THE WRITTEN CONSENT OF RRM DESIGN GROUP. VISUAL CONTACT WITH THESE DRAWINGS OR SPECIFICATIONS SHALL CONSTITUTE CONCLUSIVE EVIDENCE OF ACCEPTANCE OF THESE RESTRICTIONS. SUBMITTAL OF PRELIMINARY DRAWINGS FOR REVIEW SHALL NOT BE CONSIDERED A WAIVER OF RRM DESIGN GROUP'S RIGHTS.
RRM DESIGN GROUP COPYRIGHT 2022
RRM IS A CALIFORNIA CORPORATION

LICENSED ARCHITECT
MICHELLE SCOTT LUCAS
C39678
10-31-25
RENEWAL DATE
STATE OF CALIFORNIA

CONSULTANT

AGENCY

FOURTH ST COMMUNITY CENTER AND PARK

HENDERSON AVE., PORTERVILLE, CA 93257

REFLECTED CEILING PLAN

NO.	REVISION	DATE
1	PLAN CHECK REVISION 1	05/17/24
2	PLAN CHECK REVISION 2	09/17/24

PROJECT MANAGER: TSL
DRAWN BY: MC, NA, PM
CHECKED BY: DD, KF
DATE: 2024.09.17
PROJECT NUMBER: 2883-01-RC22
SHEET: A111

PLAN CHECK REVISION 2

9/20/2024 11:02:41 AM
Autodesk Docs://2883-01_Portenville Fourth St Community Center/2883-01-RC22_Porterville_v22.rvt

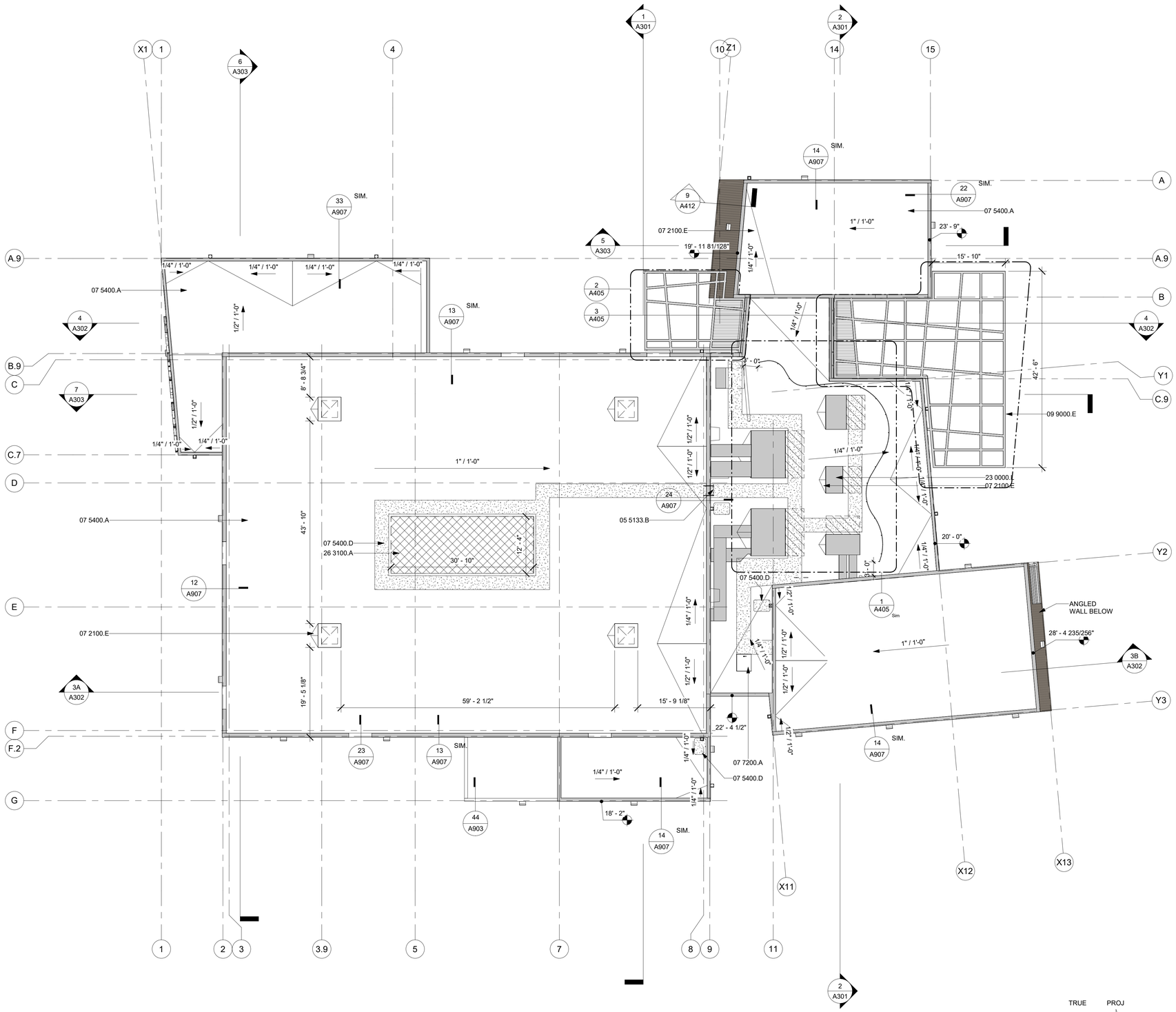

1 ROOF PLAN

A121 SCALE: 3/32" = 1'-0"

LEGEND

- 10'-0" — HEIGHT OF TOP OF ROOFING SURFACE (INCLUDING CRICKETS AND INSULATION)
- 2" / 12" — ROOF SLOPE (REFER TO PLANS FOR ACTUAL SLOPE)
- WALL BELOW
- GUTTER, CONNECT TO DOWNSPOUT
- DOWNSPOUT, TO ROOF OR SPLASHBLOCK BELOW U.N.O.
- FUTURE SOLAR ZONE. REFER TO SOLAR READY NOTES ON SHEET G-101.
- MECHANICAL EQUIPMENT, REFER TO MECHANICAL PLANS
- +XX" — TAPERED INSULATION HEIGHT

KEYNOTES

05 5133.B	EXTERIOR METAL LADDER
07 2100.E	TAPERED RIGID ROOF INSULATION CRICKET, TO PROVIDE SLOPE
07 5400.A	THERMOPLASTIC MEMBRANE ROOFING SYSTEM, CLASS A – SEE SPECIFICATIONS. REFER TO DETAIL 11/2A-921 FOR ROOF ASSEMBLY.
07 5400.D	ROOF WALKING PAD
07 7200.A	ROOF ACCESS HATCH
09 9000.E	STAINED WOOD TRELLIS.
23 0000.L	PACKAGED ROOFTOP AIR CONDTIONER HEAT PUMP. REFER TO MECHANICAL
26 3100.A	PHOTOVOLTAIC PANEL

rrm design group
rrmdesign.com | (805) 543-1794
3765 SOUTH HIGUERA STREET, SUITE 102
SAN LUIS OBISPO, CA 93401

THE INCLUDED DRAWINGS, SPECIFICATIONS, IDEAS, DESIGNS AND ARRANGEMENTS REPRESENTED THEREBY ARE AND SHALL REMAIN THE PROPERTY OF RRM DESIGN GROUP AND NO PART THEREOF SHALL BE COPIED, DISCLOSED TO OTHERS OR USED IN CONNECTION WITH ANY WORK OR PROJECT OTHER THAN THE SPECIFIED PROJECT FOR WHICH THEY HAVE BEEN PREPARED AND DEVELOPED WITHOUT THE WRITTEN CONSENT OF RRM DESIGN GROUP. VISUAL CONTACT WITH THESE DRAWINGS OR SPECIFICATIONS SHALL CONSTITUTE CONCLUSIVE EVIDENCE OF ACCEPTANCE OF THESE RESTRICTIONS. SUBMITTAL OF THESE DOCUMENTS FOR PUBLIC AGENCY REVIEW SHALL NOT BE CONSIDERED A WAIVER OF RRM DESIGN GROUP'S RIGHTS.
RRM DESIGN GROUP COPYRIGHT 2022
RRM IS A CALIFORNIA CORPORATION

LICENSED ARCHITECT
MADELLE SCOTT LUPTON
C39678
10-31-25
RENEWAL DATE
STATE OF CALIFORNIA

CONSULTANT

AGENCY

FOURTH ST COMMUNITY CENTER AND PARK
HENDERSON AVE., PORTERVILLE, CA 93257

ROOF PLAN

NO.	REVISION	DATE
△		
△		
△		
△		
△		
△		

PROJECT MANAGER: TSL
DRAWN BY: MC, NA, PM
CHECKED BY: DD, KF
DATE: 2024.09.17
PROJECT NUMBER: 2883-01-RC22
SHEET: A121

PLAN CHECK REVISION 2

9/20/2024 11:02:43 AM
Autodesk Docs://2883-01_Porterville Fourth St Community Center/2883-01-RC22_Porterville_v22.rvt

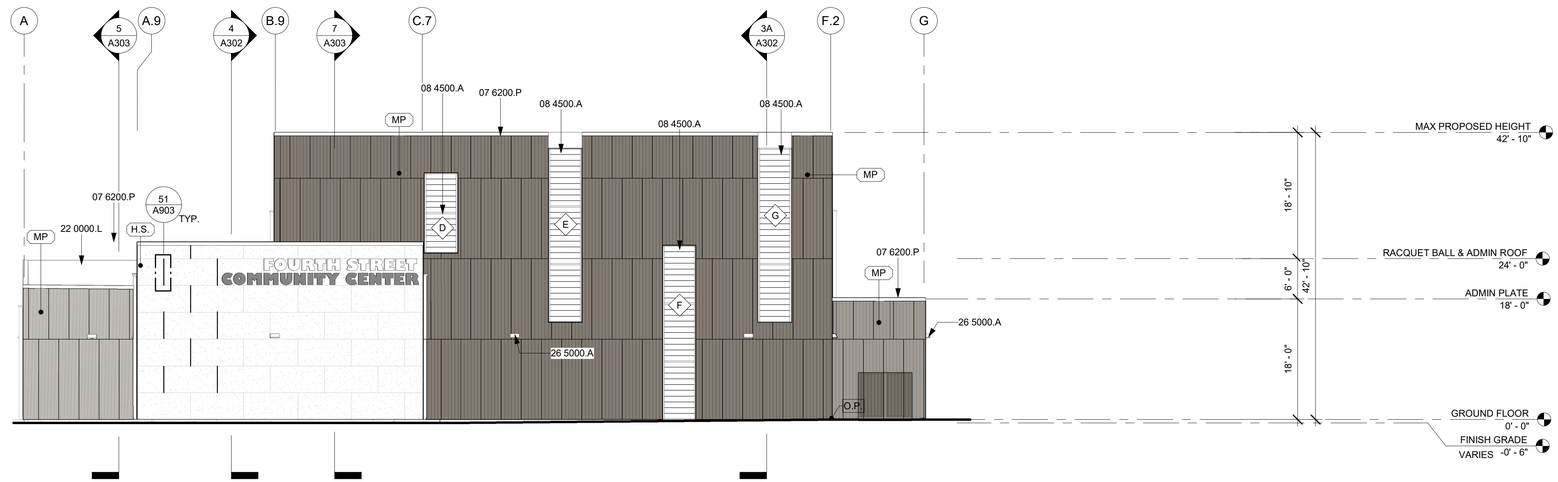

1 NORTH ELEVATION

A101 | A201 SCALE: 3/32" = 1'-0"

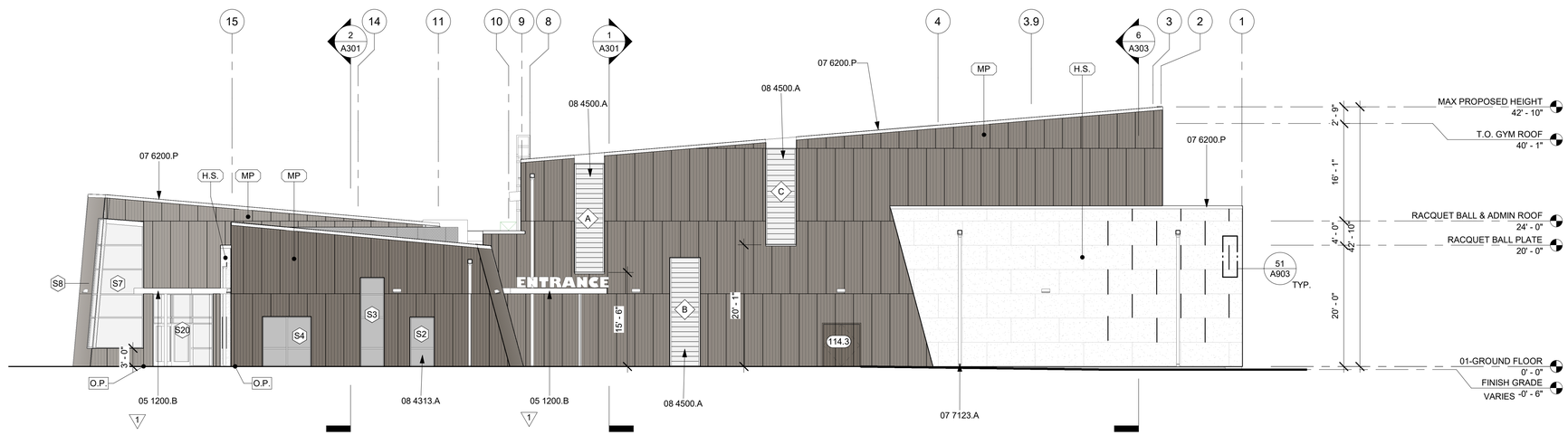

2 EAST ELEVATION

A101 | A201 SCALE: 3/32" = 1'-0"

KEYNOTES

1 05 1200.B	FABRICATED METAL CANOPY. REFER TO STRUCTURAL DRAWINGS
07 6200.P	BREAK METAL COPING
07 7123.A	DOWNSPOUT. MATCH FINISHED WALL COLOR.
08 4313.A	ALUMINUM STOREFRONT SYSTEM - REFER TO SCHEDULES.
08 4500.A	TRANSLUCENT WALL PANEL
22 0000.L	ROOF DRAIN/OVERFLOW. REFER TO PLUMBING.
26 5000.A	LIGHT FIXTURE. REFER TO ELECTRICAL

LEGEND

?	MATERIAL TAG. REFER TO MATERIAL SCHEDULE FOR PRODUCT INFORMATION.
O.P	ORIGIN POINT FOR PANEL INSTALLATION
MP	07 4213 METAL PANEL - WEATHERED STEEL
HS	07 4646 JAMES HARDIE FIBER CEMENT PANEL SAND FINISH - PEARL GRAY COLOR
P1	09 9000 STAINED WOOD TRELLIS

ELEVATION GENERAL NOTES

1. REFER TO GENERAL NOTES SHEET G-101 FOR ADDITIONAL REQUIREMENTS.
2. FRAMING ELEVATIONS, INCLUDING FLOOR PLATES AND FLOOR LEVEL ELEVATIONS ARE MEASURED FROM BUILDING FINISH FLOOR, U.N.O.
3. SEE DETAILS FOR ADDITIONAL INFORMATION AND REQUIREMENTS.
4. REFER TO ROOF PLAN FOR ROOF PITCH AND OVERHANGS. FASCIA PER DETAILS.
5. SEE ROOF PLAN FOR APPROXIMATE DOWNSPOUT LOCATIONS, U.N.O.
6. REFER TO DOOR AND WINDOW SCHEDULES AND TYPES FOR DOOR AND WINDOW INFORMATION.
7. SEE ELECTRICAL DRAWINGS FOR EXTERIOR LIGHTING
8. SEE MECHANICAL DRAWINGS FOR GRILLES AND LOUVERS. PAINT TO MATCH ADJACENT FINISH.
9. CONTRACTOR TO VERIFY COLOR SCHEME WITH OWNER BEFORE PERFORMING THE WORK.
10. BACKLIT SIGNAGE UNDER SEPARATE PERMIT. PROVIDE SHOP DRAWINGS FOR ARCHITECT REVIEW PRIOR TO SUBMITTAL.

1

rrm design group
rrmdesign.com | (805) 543-1794
3765 SOUTH HIGUERA STREET SUITE 102
SAN LUIS OBISPO, CA 93401

THE INCLUDED DRAWINGS, SPECIFICATIONS, IDEAS, DESIGNS AND ARRANGEMENTS REPRESENTED THEREBY ARE AND SHALL REMAIN THE PROPERTY OF RRM DESIGN GROUP AND NO PART THEREOF SHALL BE COPIED, DISCLOSED TO OTHERS OR USED IN CONNECTION WITH ANY WORK OR PROJECT OTHER THAN THE SPECIFIED PROJECT FOR WHICH THEY HAVE BEEN PREPARED AND DEVELOPED WITHOUT THE WRITTEN CONSENT OF RRM DESIGN GROUP. VISUAL CONTACT WITH THESE DRAWINGS OR SPECIFICATIONS SHALL CONSTITUTE CONCLUSIVE EVIDENCE OF ACCEPTANCE OF THESE RESTRICTIONS. SUBMITTAL OF PRELIMINARY DRAWINGS FOR REVIEW SHALL NOT BE CONSIDERED A WAIVER OF RRM DESIGN GROUP'S RIGHTS.
RRM DESIGN GROUP COPYRIGHT 2022
RRM IS A CALIFORNIA CORPORATION

LICENSED ARCHITECT
MICHAEL SCOTT LUPTON
C39678
10-31-25
RENEWAL DATE
STATE OF CALIFORNIA

CONSULTANT

AGENCY

FOURTH ST COMMUNITY CENTER AND PARK

HENDERSON AVE., PORTERVILLE, CA 93257

EXTERIOR ELEVATIONS

NO.	REVISION	DATE
1	PLAN CHECK REVISION 1	05/17/24

PLAN CHECK REVISION 2

PROJECT MANAGER TSL
DRAWN BY MC, NA, PM
CHECKED BY DD, KF
DATE 2024.09.17
PROJECT NUMBER 2883-01-RC22
SHEET A201

9/20/2024 11:02:46 AM
Autodesk Docs://2883-01_Porterville Fourth St Community Center/2883-01-RC22_Porterville_v22.rvt

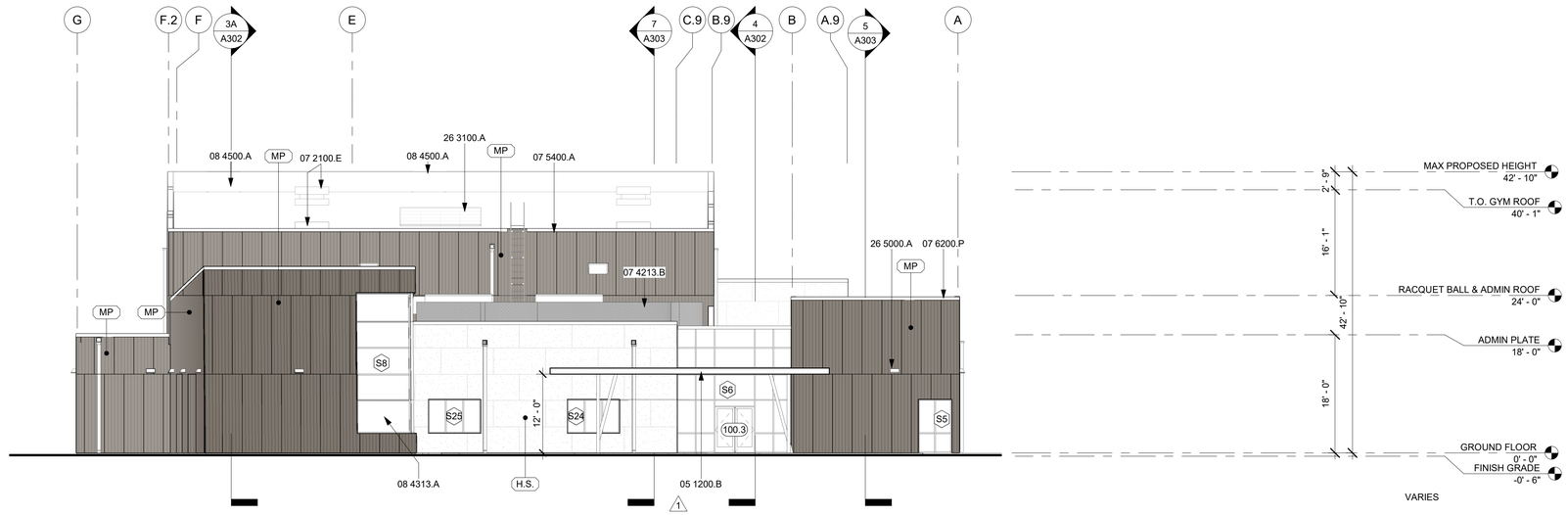

1 SOUTH ELEVATION

A101 | A202 SCALE: 3/32" = 1'-0"

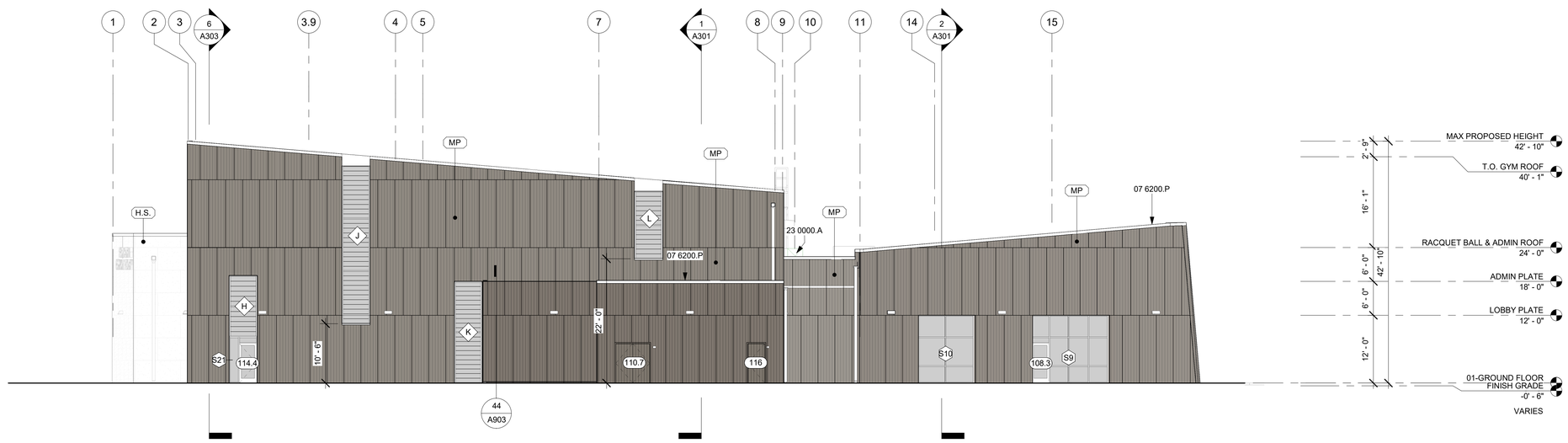

2 WEST ELEVATION

A101 | A202 SCALE: 3/32" = 1'-0"

KEYNOTES

1 05 1200.B	FABRICATED METAL CANOPY. REFER TO STRUCTURAL DRAWINGS
07 2100.E	TAPERED RIGID ROOF INSULATION CRICKET, TO PROVIDE SLOPE
07 4213.B	PERFORATED METAL SCREEN
07 5400.A	THERMOPLASTIC MEMBRANE ROOFING SYSTEM, CLASS A – SEE SPECIFICATIONS. REFER TO DETAIL 11/2A-921 FOR ROOF ASSEMBLY.
07 6200.P	BREAK METAL COPING
08 4313.A	ALUMINUM STOREFRONT SYSTEM - REFER TO SCHEDULES.
08 4500.A	TRANSLUCENT WALL PANEL
23 0000.A	MECHANICAL EQUIPMENT. REFER TO MECHANICAL
26 3100.A	PHOTOVOLTAIC PANEL
26 5000.A	LIGHT FIXTURE. REFER TO ELECTRICAL

LEGEND

?	MATERIAL TAG. REFER TO MATERIAL SCHEDULE FOR PRODUCT INFORMATION.
O.P	ORIGIN POINT FOR PANEL INSTALLATION
MP	07 4213 METAL PANEL - WEATHERED STEEL
HS	07 4646 JAMES HARDIE FIBER CEMENT PANEL SAND FINISH - PEARL GRAY COLOR
P1	09 9000 STAINED WOOD TRELLIS

ELEVATION GENERAL NOTES

1. REFER TO GENERAL NOTES SHEET G-101 FOR ADDITIONAL REQUIREMENTS.
2. FRAMING ELEVATIONS, INCLUDING FLOOR PLATES AND FLOOR LEVEL ELEVATIONS ARE MEASURED FROM BUILDING FINISH FLOOR, U.N.O.
3. SEE DETAILS FOR ADDITIONAL INFORMATION AND REQUIREMENTS.
4. REFER TO ROOF PLAN FOR ROOF PITCH AND OVERHANGS. FASCIA PER DETAILS.
5. SEE ROOF PLAN FOR APPROXIMATE DOWNSPOUT LOCATIONS, U.N.O.
6. REFER TO DOOR AND WINDOW SCHEDULES AND TYPES FOR DOOR AND WINDOW INFORMATION.
7. SEE ELECTRICAL DRAWINGS FOR EXTERIOR LIGHTING
8. SEE MECHANICAL DRAWINGS FOR GRILLES AND LOUVERS. PAINT TO MATCH ADJACENT FINISH.
9. CONTRACTOR TO VERIFY COLOR SCHEME WITH OWNER BEFORE PERFORMING THE WORK.
10. BACKLIT SIGNAGE UNDER SEPARATE PERMIT. PROVIDE SHOP DRAWINGS FOR ARCHITECT REVIEW PRIOR TO SUBMITTAL. 1

rrm design group
rrmdesign.com | (805) 543-1794
3765 SOUTH HIGUERA STREET SUITE 102
SAN LUIS OBISPO, CA 93401

THE INCLUDED DRAWINGS, SPECIFICATIONS, IDEAS, DESIGNS AND ARRANGEMENTS REPRESENTED THEREBY ARE AND SHALL REMAIN THE PROPERTY OF RRM DESIGN GROUP AND NO PART THEREOF SHALL BE COPIED, DISCLOSED TO OTHERS OR SUBSTANTIALLY USED FOR ANY PURPOSE WHATSOEVER OTHER THAN THE PROJECT FOR WHICH THEY HAVE BEEN PREPARED AND DEVELOPED WITHOUT THE WRITTEN CONSENT OF RRM DESIGN GROUP. VISUAL CONTACT WITH THESE DRAWINGS OR SPECIFICATIONS SHALL CONSTITUTE CONCLUSIVE EVIDENCE OF ACCEPTANCE OF THESE RESTRICTIONS. SUBMITTAL OF PRELIMINARY DRAWINGS FOR REVIEW SHALL ALSO BE CONSIDERED A WAIVER OF RRM DESIGN GROUP'S RIGHTS.
RRM DESIGN GROUP COPYRIGHT 2022
RRM IS A CALIFORNIA CORPORATION

LICENSED ARCHITECT
MICHELLE SCOTT LUNDQUIST
C39678
10-31-25
RENEWAL DATE
STATE OF CALIFORNIA

CONSULTANT

AGENCY

FOURTH ST COMMUNITY CENTER AND PARK
HENDERSON AVE., PORTERVILLE, CA 93257

EXTERIOR ELEVATIONS

NO.	REVISION	DATE
1	PLAN CHECK REVISION 1	05/17/24

PROJECT MANAGER
TSL

DRAWN BY MC, NA, PM
CHECKED BY DD, KF

DATE
2024.09.17

PROJECT NUMBER
2883-01-RC22

SHEET
A202

PLAN CHECK REVISION 2

9/20/2024 11:02:50 AM
Autodesk Docs://2883-01_Porterville Fourth St Community Center/2883-01-RC22_Porterville_v22.rvt

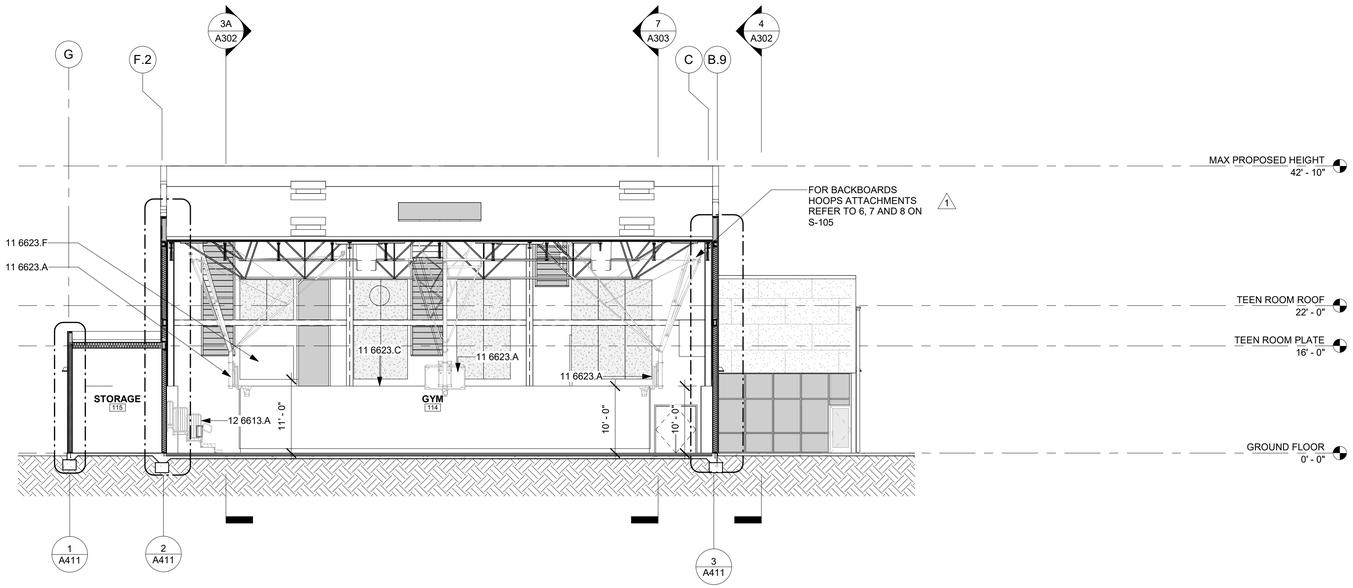

1 SECTION 01

A101 A301 SCALE: 3/32" = 1'-0"

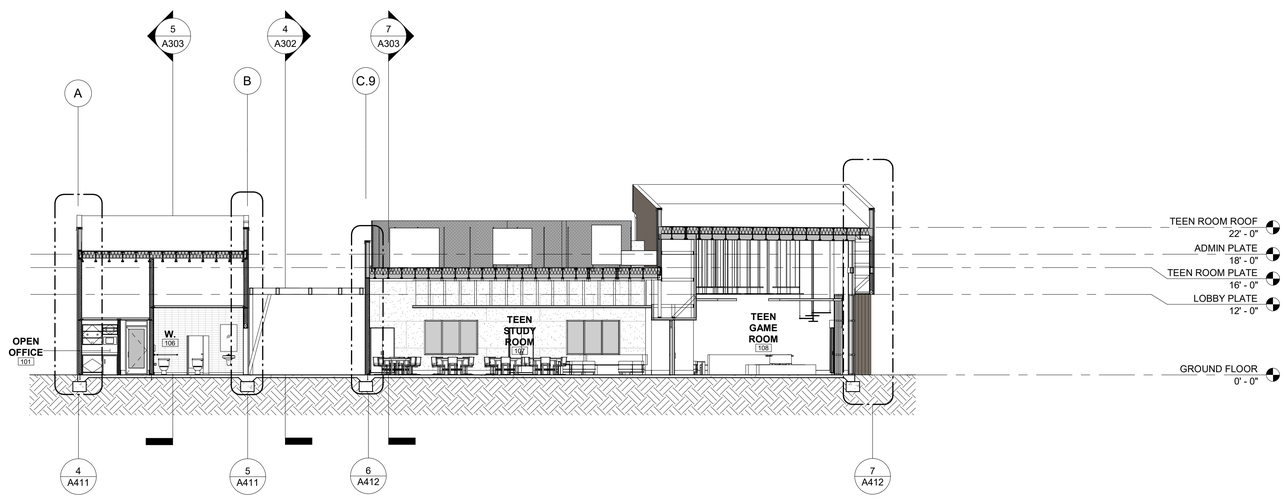

2 SECTION 02

A101 A301 SCALE: 3/32" = 1'-0"

SECTIONS GENERAL NOTES

1. THE PURPOSE OF THESE DRAWINGS IS TO SHOW CONSTRUCTION MATERIALSS/ASSEMBLIES. FOR SPECIFIC SIZES AND DETAILS REFER TO ARCHITECTURAL PLANS, ELEVATIONS, DETAILS, AND STRUCTURAL PLANS.
2. INSULATION: REFER TO TITLE 24 REPORT AND "INSULATION" NOTES ON SHEET FOR ADDITIONAL RATINGS, REQUIREMENTS, AND INFORMATION.
3. REFER TO FIREBLOCKING/DRAFTSTOPING NOTES ON SHEET G-101.
4. WOOD SHALL BE PROTECTED FROM DECAY AND TERMITES AS REQUIRED PER ***2022 CBC SECTION 2304.12***
5. FOUNDATION SILLS TO BE NATURALLY DURABLE OR PRESERVATIVE-TREATED WOOD. ***2022 CBC SECTION 2304.12.2***
6. PENETRATIONS OF FIRE-RESISTIVE WALLS, FLOOR-CEILIINGS SHALL BE PROTECTED AS REQUIRED PER ***2022 CBC SECTIONS 714.3 & 714.4***.
7. WALL ASSEMBLIES TO BE PER FLOOR PLAN.
8. DOORS, WINDOWS AND STOREFRONT SYSTEMS TO BE PER APPLICABLE SCHEDULE. REFER TO FLOOR PLANS FOR IDENTIFICATION.

KEYNOTES

11 6623.A	BASKETBALL HOOP AND BACKBOARD REFER TO DETAILS 6-8/S105 2
11 6623.C	WALL MOUNTED PROTECTION PADS
11 6623.F	ELECTRONIC SCOREBOARD REFER TO DETAIL 6/S108
12 6613.A	TELESCOPING BLEACHERS 2

rrm design group

rrmdesign.com | (805) 543-1794
3765 SOUTH HIGUERA STREET, SUITE 102
SAN LUIS OBISPO, CA 93401

THE INCLUDED DRAWINGS, SPECIFICATIONS, IDEAS, DESIGNS AND ARRANGEMENTS REPRESENTED THEREBY ARE AND SHALL REMAIN THE PROPERTY OF RRM DESIGN GROUP AND NO PART THEREOF SHALL BE COPIED, DISCLOSED TO OTHERS OR USED IN CONNECTION WITH ANY WORK OR PROJECT OTHER THAN THE SPECIFIED PROJECT FOR WHICH THEY HAVE BEEN PREPARED AND DEVELOPED WITHOUT THE WRITTEN CONSENT OF RRM DESIGN GROUP. VISUAL CONTACT WITH THESE DRAWINGS OR SPECIFICATIONS SHALL CONSTITUTE CONCLUSIVE EVIDENCE OF ACCEPTANCE OF THESE RESTRICTIONS. SUBMITTAL OF THESE DOCUMENTS FOR PUBLIC AGENCY REVIEW SHALL NOT BE CONSIDERED A WAIVER OF RRM DESIGN GROUP'S RIGHTS.

RRM DESIGN GROUP COPYRIGHT 2022
RRM IS A CALIFORNIA CORPORATION

LICENSED ARCHITECT
MADDELIE SCOTT LUPTON
C39678
10-31-25
RENEWAL DATE
STATE OF CALIFORNIA

CONSULTANT

AGENCY

PLAN CHECK REVISION 2

FOURTH ST COMMUNITY CENTER AND PARK
HENDERSON AVE., PORTERVILLE, CA 93257

BUILDING SECTIONS

NO.	REVISION	DATE
1	PLAN CHECK REVISION 1	05/17/24
2	PLAN CHECK REVISION 2	09/17/24

PROJECT MANAGER
TSL

DRAWN BY
MC, NA, PM

CHECKED BY
DD, KF

DATE
2024.09.17

PROJECT NUMBER
2883-01-RC22

SHEET
A301

9/20/2024 11:02:57 AM
Autodesk Docs://2883-01_Porterville Fourth St Community Center/2883-01-RC22_Porterville_v22.rvt

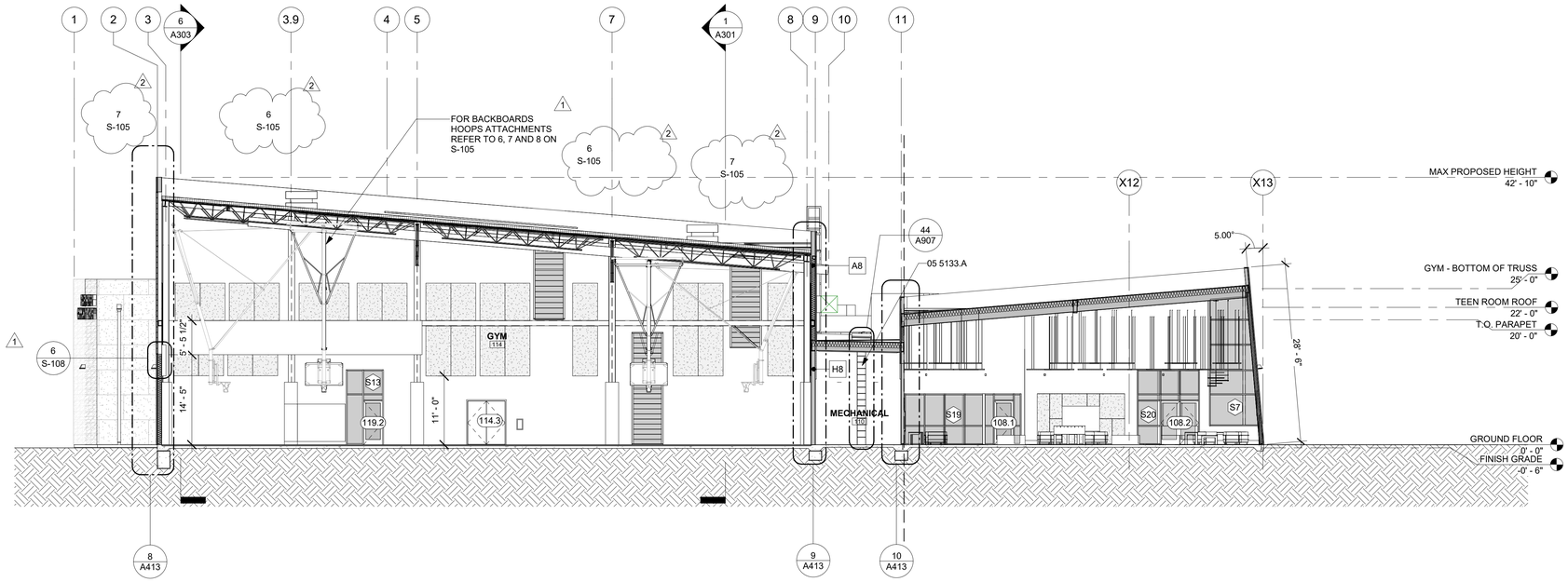

3A SECTION 03

A101 A302 SCALE: 3/32" = 1'-0"

3B SECTION 03B

A2 A302 SCALE: 3/32" = 1'-0"

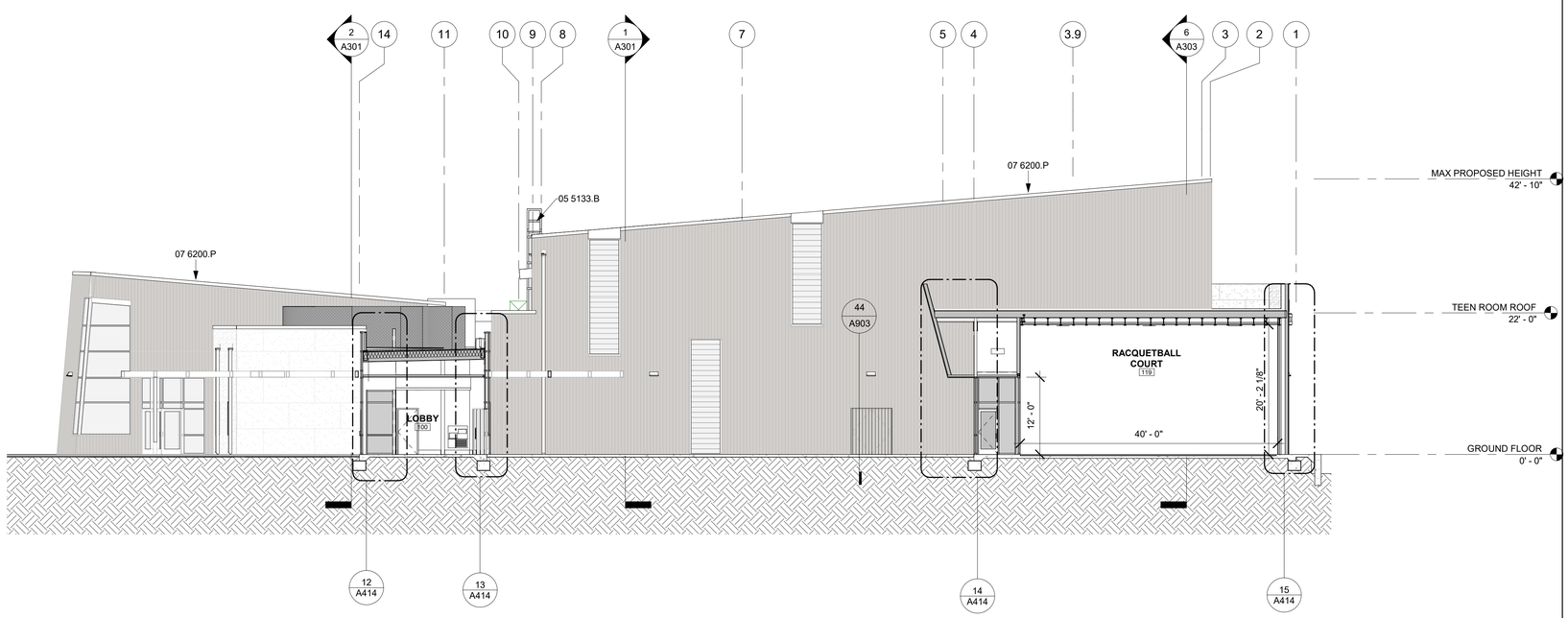

4 SECTION 04

A101 A302 SCALE: 3/32" = 1'-0"

SECTIONS GENERAL NOTES

1. THE PURPOSE OF THESE DRAWINGS IS TO SHOW CONSTRUCTION MATERIALSS/ASSEMBLIES. FOR SPECIFIC SIZES AND DETAILS REFER TO ARCHITECTURAL PLANS, ELEVATIONS, DETAILS, AND STRUCTURAL PLANS.
2. INSULATION: REFER TO TITLE 24 REPORT AND "INSULATION" NOTES ON SHEET FOR ADDITIONAL RATINGS, REQUIREMENTS, AND INFORMATION.
3. REFER TO FIREBLOCKING/DRAFTSTOPING NOTES ON SHEET G-101.
4. WOOD SHALL BE PROTECTED FROM DECAY AND TERMITES AS REQUIRED PER ***2022 CBC SECTION 2304.12***
5. FOUNDATION SILLS TO BE NATURALLY DURABLE OR PRESERVATIVE-TREATED WOOD. ***2022 CBC SECTION 2304.12.2***
6. PENETRATIONS OF FIRE-RESISTIVE WALLS, FLOOR-CEILIINGS SHALL BE PROTECTED AS REQUIRED PER ***2022 CBC SECTIONS 714.3 & 714.4***.
7. WALL ASSEMBLIES TO BE PER FLOOR PLAN.
8. DOORS, WINDOWS AND STOREFRONT SYSTEMS TO BE PER APPLICABLE SCHEDULE. REFER TO FLOOR PLANS FOR IDENTIFICATION.

KEYNOTES

05 5133.A	INTERIOR METAL LADDER. REFER TO DETAIL 44/A906
05 5133.B	EXTERIOR METAL LADDER
07 6200.P	BREAK METAL COPING

rrm design group
rrmdesign.com | (805) 543-1794
3765 SOUTH HIGUERA STREET, SUITE 102
SAN LUIS OBISPO, CA 93401

THE INCLUDED DRAWINGS, SPECIFICATIONS, IDEAS, DESIGNS AND ARRANGEMENTS REPRESENTED THEREBY ARE AND SHALL REMAIN THE PROPERTY OF RRM DESIGN GROUP AND NO PART THEREOF SHALL BE COPIED, DISCLOSED TO OTHERS OR USED IN CONNECTION WITH ANY WORK OR PROJECT OTHER THAN THE SPECIFIED PROJECT FOR WHICH THEY HAVE BEEN PREPARED AND DEVELOPED WITHOUT THE WRITTEN CONSENT OF RRM DESIGN GROUP. VISUAL CONTACT WITH THESE DRAWINGS OR SPECIFICATIONS SHALL CONSTITUTE CONCLUSIVE EVIDENCE OF ACCEPTANCE OF THESE RESTRICTIONS. SUBMITTAL OF THESE DOCUMENTS FOR PUBLIC AGENCY REVIEW SHALL NOT BE CONSIDERED A WAIVER OF RRM DESIGN GROUP'S RIGHTS.
RRM DESIGN GROUP COPYRIGHT 2022
RRM IS A CALIFORNIA CORPORATION

LICENSED ARCHITECT
MADELEINE SCOTT LUPTON
C39678
10-31-25
RENEWAL DATE
STATE OF CALIFORNIA

CONSULTANT

AGENCY

FOURTH ST COMMUNITY CENTER AND PARK
HENDERSON AVE., PORTERVILLE, CA 93257

BUILDING SECTIONS

NO.	REVISION	DATE
1	PLAN CHECK REVISION 1	05/17/24
2	PLAN CHECK REVISION 2	09/17/24

PROJECT MANAGER: TSL
DRAWN BY: MC, NA, PM
CHECKED BY: DD, KF
DATE: 2024.09.17
PROJECT NUMBER: 2883-01-RC22
SHEET: A302

PLAN CHECK REVISION 2

9/20/2024 11:03:04 AM
Autodesk Docs://2883-01_Porterville Fourth St Community Center/2883-01-RC22_Porterville_v22.rvt

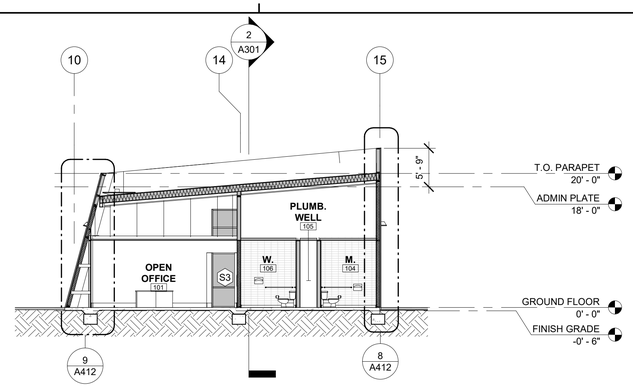

5 SECTION 05

A101 | A303 SCALE: 3/32" = 1'-0"

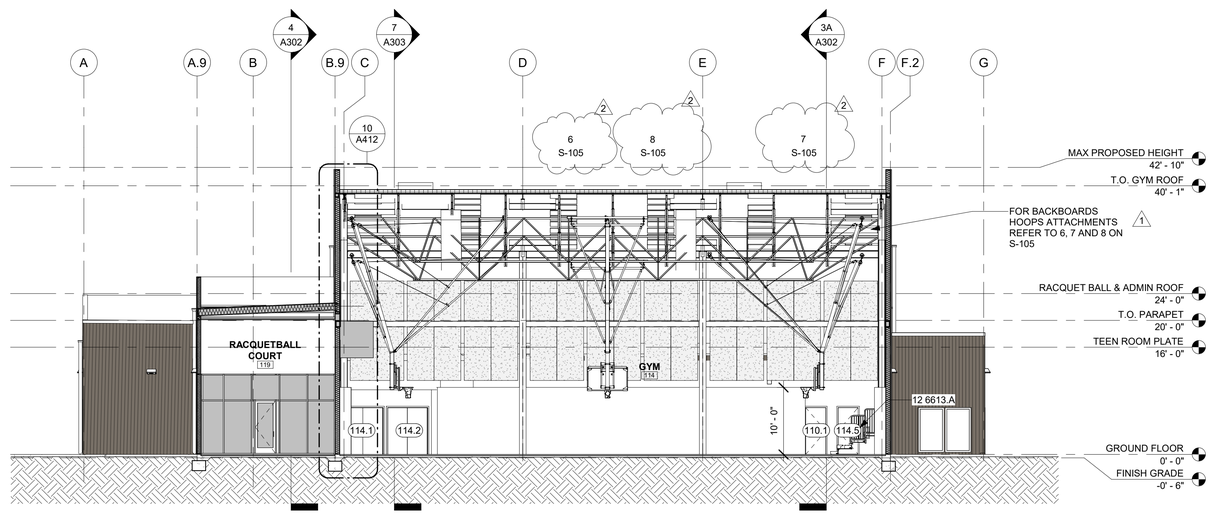

6 SECTION 06

A101 | A303 SCALE: 3/32" = 1'-0"

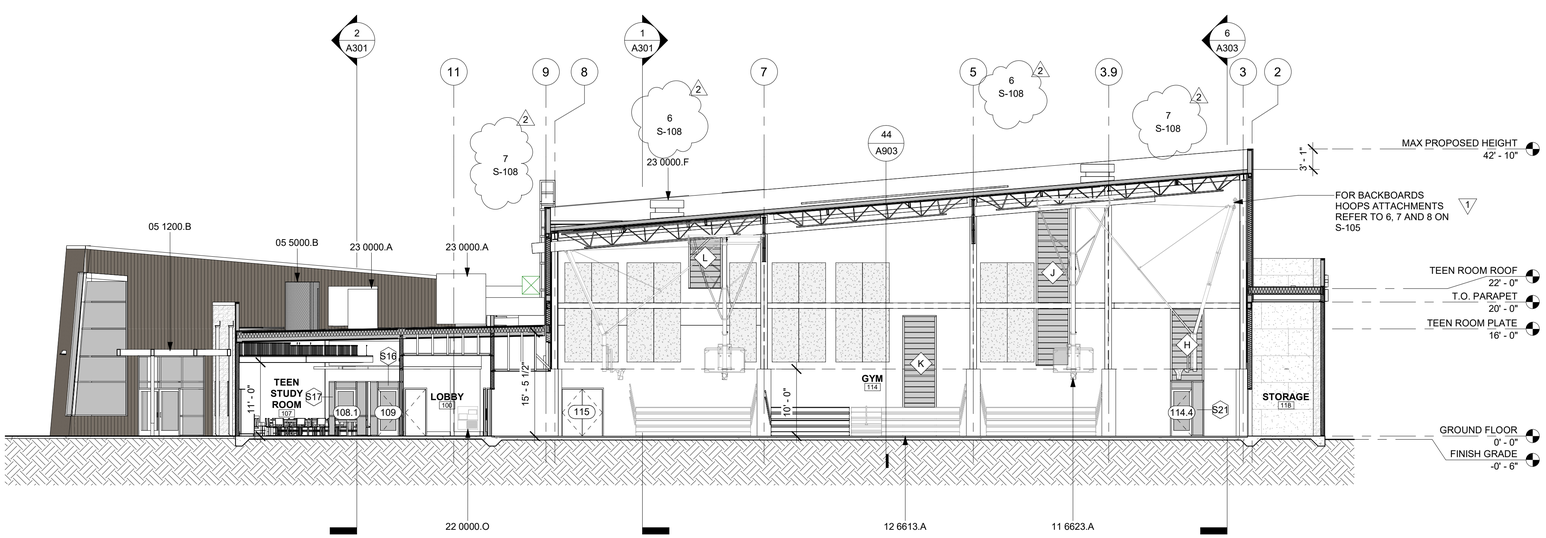

7 SECTION 07

A101 | A303 SCALE: 3/32" = 1'-0"

SECTIONS GENERAL NOTES

1. THE PURPOSE OF THESE DRAWINGS IS TO SHOW CONSTRUCTION MATERIALSS/ASSEMBLIES. FOR SPECIFIC SIZES AND DETAILS REFER TO ARCHITECTURAL PLANS, ELEVATIONS, DETAILS, AND STRUCTURAL PLANS.
2. INSULATION: REFER TO TITLE 24 REPORT AND "INSULATION" NOTES ON SHEET FOR ADDITIONAL RATINGS, REQUIREMENTS, AND INFORMATION.
3. REFER TO FIREBLOCKING/DRAFTSTOPING NOTES ON SHEET G-101.
4. WOOD SHALL BE PROTECTED FROM DECAY AND TERMITES AS REQUIRED PER ***2022 CBC SECTION 2304.12***
5. FOUNDATION SILLS TO BE NATURALLY DURABLE OR PRESERVATIVE-TREATED WOOD. ***2022 CBC SECTION 2304.12.2***
6. PENETRATIONS OF FIRE-RESISTIVE WALLS, FLOOR-CEILIINGS SHALL BE PROTECTED AS REQUIRED PER ***2022 CBC SECTIONS 714.3 & 714.4***.
7. WALL ASSEMBLIES TO BE PER FLOOR PLAN.
8. DOORS, WINDOWS AND STOREFRONT SYSTEMS TO BE PER APPLICABLE SCHEDULE. REFER TO FLOOR PLANS FOR IDENTIFICATION.

KEYNOTES

05 1200.B	FABRICATED METAL CANOPY. REFER TO STRUCTURAL DRAWINGS
05 5000.B	ROOFTOP MECHANICAL SCREEN
11 6623.A	BASKETBALL HOOP AND BACKBOARD REFER TO DETAILS 6-8/S105
12 6613.A	TELESCOPING BLEACHERS
22 0000.O	HI LOW DRINKING FOUNTAIN WITH BOTTLE FILLER.
23 0000.A	MECHANICAL EQUIPMENT. REFER TO MECHANICAL
23 0000.F	EXHAUST FAN - REFER TO MECHANICAL

rrm design group
rrmdesign.com | (805) 543-1794
3765 SOUTH HIGUERA STREET SUITE 102
SAN LUIS OBISPO, CA 93401

THE INCLUDED DRAWINGS, SPECIFICATIONS, IDEAS, DESIGNS AND ARRANGEMENTS REPRESENTED THEREBY ARE AND SHALL REMAIN THE PROPERTY OF RRM DESIGN GROUP AND NO PART THEREOF SHALL BE COPIED, DISCLOSED TO OTHERS OR EXHIBITED WITHOUT THE WRITTEN CONSENT OF RRM DESIGN GROUP, FOR ANY PURPOSE NOT PROJECT FOR WHICH THEY HAVE BEEN PREPARED AND DEVELOPED WITHOUT THE WRITTEN CONSENT OF RRM DESIGN GROUP. VISUAL CONTACT WITH THESE DRAWINGS OR SPECIFICATIONS SHALL CONSTITUTE CONCLUSIVE EVIDENCE OF ACCEPTANCE OF THESE RESTRICTIONS. SUBMITTAL OF PROPOSALS FOR THE USE OF THESE DRAWINGS SHALL BE CONSIDERED AS A WAIVER OF RRM DESIGN GROUP'S RIGHTS.
RRM DESIGN GROUP COPYRIGHT 2022
RRM IS A CALIFORNIA CORPORATION

LICENSED ARCHITECT
MICHELLE SCOTT LUPO
C39678
10-31-25
RENEWAL DATE
STATE OF CALIFORNIA

CONSULTANT

AGENCY

FOURTH ST COMMUNITY CENTER AND PARK

HENDERSON AVE., PORTERVILLE, CA 93257

BUILDING SECTIONS

NO.	REVISION	DATE
1	PLAN CHECK REVISION 1	05/17/24
2	PLAN CHECK REVISION 2	09/17/24

PROJECT MANAGER
TSL

DRAWN BY MC, NA, PM
CHECKED BY DD, KF

DATE
2024.09.17

PROJECT NUMBER
2883-01-RC22

SHEET
A303

PLAN CHECK REVISION 2

9/20/2024 11:03:15 AM
Autodesk Docs://2883-01_Porterville Fourth St Community Center/2883-01-RC22_Porterville_v22.rvt

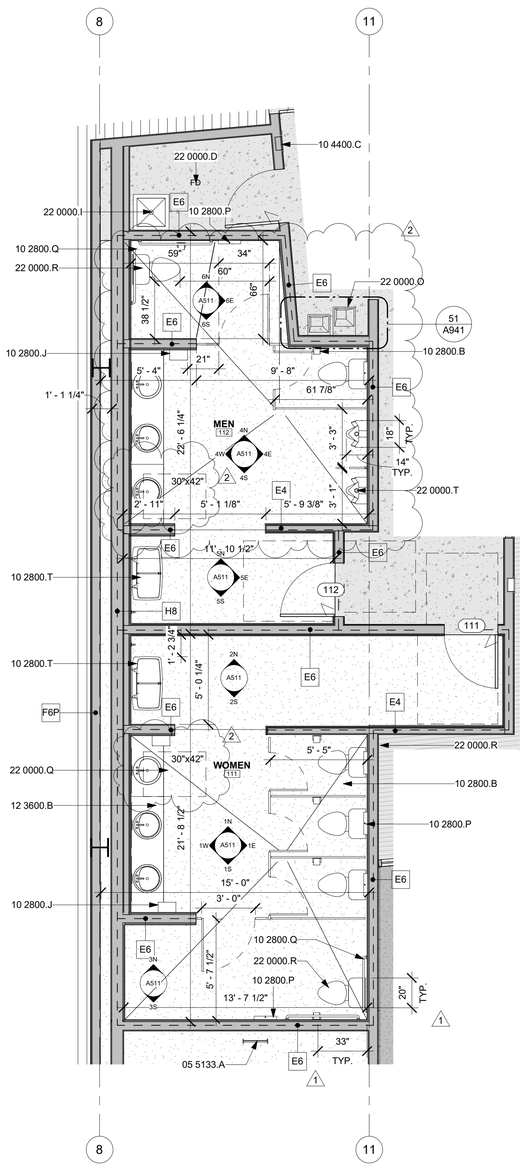

1 RESTROOM

A101 | A401 SCALE: 1/4" = 1'-0"

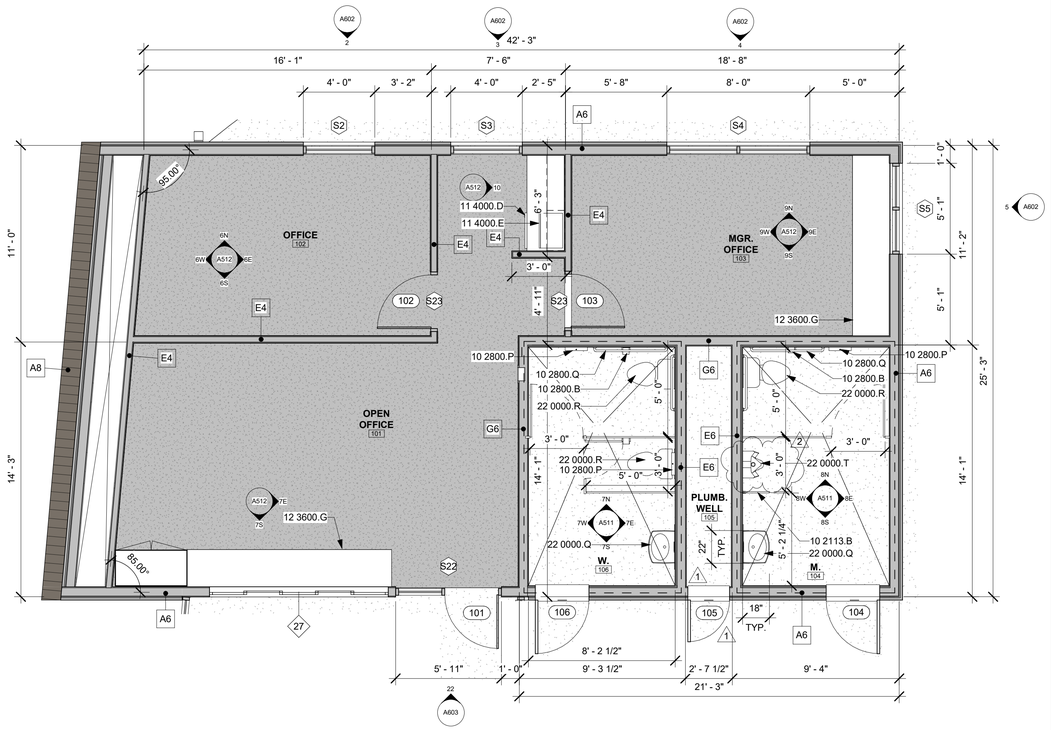

2 OFFICE

A101 | A401 SCALE: 1/4" = 1'-0"

FLOOR PLAN GENERAL NOTES

1. REFER TO GENERAL NOTES SHEET G-101 FOR ADDITIONAL REQUIREMENTS.
2. REFER TO SHEET A921 FOR WALL TYPES
3. REFER TO STRUCTURAL PLANS FOR FURTHER INFORMATION.
4. REFER TO ELECTRICAL PLANS FOR FURTHER INFORMATION IF PROVIDED.
5. REFER TO MECHANICAL PLANS, DRAWINGS OR REPORTS FOR FURTHER INFORMATION.
6. REFER TO PLUMBING PLANS OR DRAWINGS FOR FURTHER INFORMATION IF PROVIDED.
7. ALL FURNITURE AND EQUIPMENT IS BY OWNER AND IS SHOWN FOR COORDINATION PURPOSES ONLY.
8. ALL CASEWORK SHALL BE PROVIDED BY CONTRACTOR
9. INTERIOR WALL DIMENSIONS ARE TO FACE OF FRAMING UNLESS SPECIFICALLY NOTED OTHERWISE.
10. EXTERIOR DIMENSIONS ARE TO FACE OF SHEATHING UNLESS SPECIFICALLY NOTED OTHERWISE
11. PROVIDE ADEQUATE BLOCKING IN WALLS FOR CABINETS AND OTHER WALL MOUNTED ACCESSORIES INCLUDING BUT NOT LIMITED TO HANDRAILS, SHELVING AND BATHROOM FIXTURES.
12. PROVIDE FIREBLOCKING FOR WALL CAVITIES THAT EXCEED **2022 CBC** HEIGHT LIMITATIONS
13. DOOR AND WINDOW DIMENSIONS ARE CENTERED AT OPENINGS
14. WHERE DOOR IS LOCATED WITHOUT DIMENSION AT THE CORNER OF A ROOM IT SHALL BE 4" FROM FACE OF FRAMING OF ADJACENT WALL TO ROUGH DOOR OPENING
15. SEE CODE ANALYSIS FOR LOCATIONS OF FIRE PARTITIONS AND FIRE BARRIERS
16. WHERE RECESSED FIXTURES OCCUR IN WALLS OR HORIZONTAL ASSEMBLIES, THE FIRE RATING OF THOSE ASSEMBLIES SHALL BE MAINTAINED
17. AT ALL PENETRATIONS AND INTERSECTIONS OF FIRE-RATED PARTITIONS, PROVIDE FIRE SEALANT AND/OR FIRE STOPPING TO MAINTAIN CONTINUITY OF PARTITION RATING

KEYNOTES

05 5133.A	INTERIOR METAL LADDER. REFER TO DETAIL 44/A906
10 2113.B	URINAL SCREEN
10 2800.B	SURFACE MOUNTED TOILET PAPER DISPENSER
10 2800.J	SURFACE MOUNTED ELECTRIC HAND DRYER
10 2800.P	SEAT COVER DISPENSER. SEE DETAIL 11/A-944 FOR MOUNTING HEIGHT
10 2800.Q	GRAB BAR. REFER TO DETAIL 14/A944
10 2800.T	DIAPER CHANGING STATION REFER TO 32 AND 34 ON A941
10 4400.C	RECESSED FIRE EXTINGUISHER CABINET WITH EXTINGUISHER, 2A:10B:C RATING PER DETAIL 41/A-941
11 4000.D	UNDERCOUNTER REFRIGERATOR.
11 4000.E	MICROWAVE OVEN.
12 3600.B	SOLID SURFACE COUNTERTOP
12 3600.G	PLASTIC LAMINATE WORKSURFACE W/METAL SUPPORT BRACKETS. REFER TO DETAIL 21/A905
22 0000.D	FLOOR DRAIN. REFER TO PLUMBING.
22 0000.I	MOP SINK. REFER TO PLUMBING.
22 0000.O	HI LOW DRINKING FOUNTAIN WITH BOTTLE FILLER.
22 0000.Q	SINK OR LAVATORY.REFER TO PLUMBING.
22 0000.R	TOILET. REFER TO PLUMBING.
22 0000.T	URINAL. REFER TO PLUMBING.

LEGEND

A6	**EXTERIOR WALL**- 2X6 WOOD STUD W/ PLYWOOD SHEATHING, RIGID INSULATION AND 1-1/2" METAL PANEL FINISH, ONE LAYER GYPSUM WALL BOARD INTERIOR.
A8	**EXTERIOR WALL**- 2X8 WOOD STUD W/ PLYWOOD SHEATHING, RIGID INSULATION AND 1-1/2" METAL PANEL FINISH, ONE LAYER GYPSUM WALL BOARD INTERIOR.
B	**EXTERIOR WALL** - 2X6 WOOD STUD W/ PLYWOOD SHEATHING, RIGID INSULATION AND FIBER-CEMENT BOARD ARCHITECTURAL , ONE LAYER OF GYPSUM WALL BOARD INTERIOR.
E4	**INTERIOR**- 2X4 WOOD STUD. REFER TO FINISH PLAN FOR WALL FINISH
E6	**INTERIOR**- 2X6 FRAMING WOOD STUD. REFER TO FINISH PLAN FOR WALL FINISH
E8	**INTERIOR**- 2X8 FRAMING WOOD STUD. REFER TO FINISH PLAN FOR WALL FINISH
F4	**INTERIOR**- 2X4 WOOD STUD FURRED. REFER TO FINISH PLAN FOR WALL FINISH
F6	**INTERIOR**- 2X6 WOOD STUD FURRED. REFER TO FINISH PLAN FOR WALL FINISH
F6P	**INTERIOR**- 2X6 WOOD STUD FURRED WITH PADDING REFER TO FINISH PLAN FOR WALL FINISH
G6	**INTERIOR**- 2X6 FRAMING WOOD PARTY WALL STAGGERED STUD. REFER TO FINISH PLAN FOR WALL FINISH
Sx	STOREFRONT ASSEMBLY REFER TO DOOR WINDOW SCHEDULE FOR MORE INFORMATION
	INDICATES DEPRESSED SLAB REFER TO A501 - FINISH PLAN AND STRUCTURAL 6/S-101 FOR MORE INFORMATION

rrm design group
rrmdesign.com | (805) 543-1794
3765 SOUTH HIGUERA STREET SUITE 102
SAN LUIS OBISPO, CA 93401

THE INCLUDED DRAWINGS, SPECIFICATIONS, IDEAS, DESIGNS AND ARRANGEMENTS REPRESENTED THEREBY ARE AND SHALL REMAIN THE PROPERTY OF RRM DESIGN GROUP AND NO PART THEREOF SHALL BE COPIED, DISCLOSED TO OTHERS OR SUBSTANTIALLY USED FOR ANY PURPOSE WITHOUT THE PERMISSION OF RRM DESIGN GROUP FOR WHICH THEY HAVE BEEN PREPARED AND DEVELOPED WITHOUT THE WRITTEN CONSENT OF RRM DESIGN GROUP. VISUAL CONTACT WITH THESE DRAWINGS OR SPECIFICATIONS SHALL CONSTITUTE CONCLUSIVE EVIDENCE OF ACCEPTANCE OF THESE RESTRICTIONS. SUBMITTAL OF PRELIMINARY DRAWINGS FOR REVIEW SHALL NOT BE CONSIDERED A WAIVER OF RRM DESIGN GROUP'S RIGHTS.
RRM DESIGN GROUP COPYRIGHT 2022
RRM IS A CALIFORNIA CORPORATION

LICENSED ARCHITECT
MICHELLE SCOTT LUCAS
C39678
10-31-25
RENEWAL DATE
STATE OF CALIFORNIA

CONSULTANT

AGENCY

FOURTH ST COMMUNITY CENTER AND PARK
HENDERSON AVE., PORTERVILLE, CA 93257
ENLARGED PLANS - RESTROOMS AND OFFICE

NO.	REVISION	DATE
1	PLAN CHECK REVISION 1	05/17/24
2	PLAN CHECK REVISION 2	09/17/24

PROJECT MANAGER TSL
DRAWN BY MC, NA, PM
CHECKED BY DD, KF
DATE 2024.09.17
PROJECT NUMBER 2883-01-RC22
SHEET A401

PLAN CHECK REVISION 2

9/20/2024 11:03:17 AM
Autodesk Docs://2883-01_Portenville Fourth St Community Center/2883-01-RC22_Porterville_v22.rvt

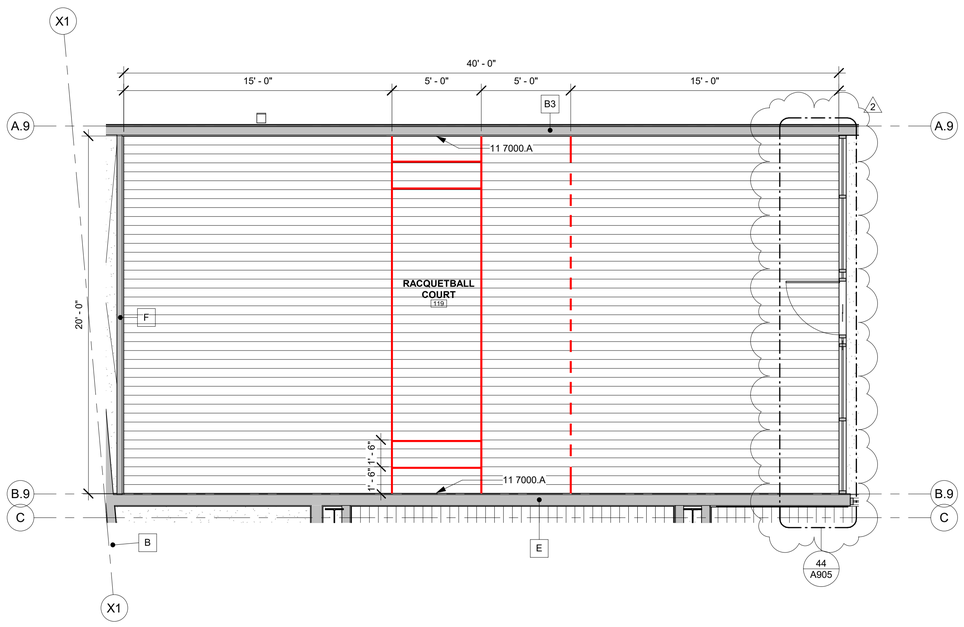

1 A101 A402 **RAQUETBALL**
SCALE: 1/4" = 1'-0"

FLOOR PLAN GENERAL NOTES

1. REFER TO GENERAL NOTES SHEET G-101 FOR ADDITIONAL REQUIREMENTS.
2. REFER TO SHEET A921 FOR WALL TYPES
3. REFER TO STRUCTURAL PLANS FOR FURTHER INFORMATION.
4. REFER TO ELECTRICAL PLANS FOR FURTHER INFORMATION IF PROVIDED.
5. REFER TO MECHANICAL PLANS, DRAWINGS OR REPORTS FOR FURTHER INFORMATION.
6. REFER TO PLUMBING PLANS OR DRAWINGS FOR FURTHER INFORMATION IF PROVIDED.
7. ALL FURNITURE AND EQUIPMENT IS BY OWNER AND IS SHOWN FOR COORDINATION PURPOSES ONLY.
8. ALL CASEWORK SHALL BE PROVIDED BY CONTRACTOR
9. INTERIOR WALL DIMENSIONS ARE TO FACE OF FRAMING UNLESS SPECIFICALLY NOTED OTHERWISE.
10. EXTERIOR DIMENSIONS ARE TO FACE OF SHEATHING UNLESS SPECIFICALLY NOTED OTHERWISE
11. PROVIDE ADEQUATE BLOCKING IN WALLS FOR CABINETS AND OTHER WALL MOUNTED ACCESSORIES INCLUDING BUT NOT LIMITED TO HANDRAILS, SHELVING AND BATHROOM FIXTURES.
12. PROVIDE FIREBLOCKING FOR WALL CAVITIES THAT EXCEED **2022 CBC** HEIGHT LIMITATIONS
13. DOOR AND WINDOW DIMENSIONS ARE CENTERED AT OPENINGS
14. WHERE DOOR IS LOCATED WITHOUT DIMENSION AT THE CORNER OF A ROOM IT SHALL BE 4" FROM FACE OF FRAMING OF ADJACENT WALL TO ROUGH DOOR OPENING
15. SEE CODE ANALYSIS FOR LOCATIONS OF FIRE PARTITIONS AND FIRE BARRIERS
16. WHERE RECESSED FIXTURES OCCUR IN WALLS OR HORIZONTAL ASSEMBLIES, THE FIRE RATING OF THOSE ASSEMBLIES SHALL BE MAINTAINED
17. AT ALL PENETRATIONS AND INTERSECTIONS OF FIRE-RATED PARTITIONS, PROVIDE FIRE SEALANT AND/OR FIRE STOPPING TO MAINTAIN CONTINUITY OF PARTITION RATING

KEYNOTES

11 7000.A WALLYBALL ANCHOR

LEGEND

A6 **EXTERIOR WALL-** 2X6 WOOD STUD W/ PLYWOOD SHEATHING, RIGID INSULATION AND 1-1/2" METAL PANEL FINISH, ONE LAYER GYPSUM WALL BOARD INTERIOR.

A8 **EXTERIOR WALL-** 2X8 WOOD STUD W/ PLYWOOD SHEATHING, RIGID INSULATION AND 1-1/2" METAL PANEL FINISH, ONE LAYER GYPSUM WALL BOARD INTERIOR.

B **EXTERIOR WALL** - 2X6 WOOD STUD W/ PLYWOOD SHEATHING, RIGID INSULATION AND FIBER-CEMENT BOARD ARCHITECTURAL , ONE LAYER OF GYPSUM WALL BOARD INTERIOR.

E4 **INTERIOR-** 2X4 WOOD STUD.
REFER TO FINISH PLAN FOR WALL FINISH

E6 **INTERIOR-** 2X6 FRAMING WOOD STUD.
REFER TO FINISH PLAN FOR WALL FINISH

E8 **INTERIOR-** 2X8 FRAMING WOOD STUD.
REFER TO FINISH PLAN FOR WALL FINISH

F4 **INTERIOR-** 2X4 WOOD STUD FURRED.
REFER TO FINISH PLAN FOR WALL FINISH

F6 **INTERIOR-** 2X6 WOOD STUD FURRED.
REFER TO FINISH PLAN FOR WALL FINISH

F6P **INTERIOR-** 2X6 WOOD STUD FURRED WITH PADDING
REFER TO FINISH PLAN FOR WALL FINISH

G6 **INTERIOR-** 2X6 FRAMING WOOD PARTY WALL STAGGERED STUD.
REFER TO FINISH PLAN FOR WALL FINISH

Sx STOREFRONT ASSEMBLY REFER TO DOOR WINDOW SCHEDULE FOR MORE INFORMATION

INDICATES DEPRESSED SLAB
REFER TO A501 - FINISH PLAN AND STRUCTURAL 6/S-101 FOR MORE INFORMATION

rrm design group
rrmdesign.com | (805) 543-1794
3765 SOUTH HIGUERA STREET SUITE 102
SAN LUIS OBISPO, CA 93401

THE INCLUDED DRAWINGS, SPECIFICATIONS, IDEAS, DESIGNS AND ARRANGEMENTS REPRESENTED THEREBY ARE AND SHALL REMAIN THE PROPERTY OF RRM DESIGN GROUP AND NO PART THEREOF SHALL BE COPIED, DISCLOSED TO OTHERS OR EXHIBITED WITHOUT THE WRITTEN CONSENT OF RRM DESIGN GROUP, FOR ANY PURPOSE EXCEPT THE PROJECT FOR WHICH THEY HAVE BEEN PREPARED AND DEVELOPED WITHOUT THE WRITTEN CONSENT OF RRM DESIGN GROUP. VISUAL CONTACT WITH THESE DRAWINGS OR SPECIFICATIONS SHALL CONSTITUTE CONCLUSIVE EVIDENCE OF ACCEPTANCE OF THESE RESTRICTIONS. SUBMITTAL OF PRELIMINARY DRAWINGS FOR REVIEW PURPOSES ONLY SHALL NOT BE CONSTRUED AS A WAIVER OF RRM DESIGN GROUP'S RIGHTS.
RRM DESIGN GROUP COPYRIGHT 2022
RRM IS A CALIFORNIA CORPORATION

LICENSED ARCHITECT
MICHELLE SCOTT LUPO
C39878
10-31-25
RENEWAL DATE
STATE OF CALIFORNIA

CONSULTANT

AGENCY

FOURTH ST COMMUNITY CENTER AND PARK
HENDERSON AVE., PORTERVILLE, CA 93257

ENLARGED PLANS - RACQUETBALL COURT

NO.	REVISION	DATE
2	PLAN CHECK REVISION 2	09/17/24

PROJECT MANAGER
TSL
DRAWN BY MC, NA, PM
CHECKED BY DD, KF
DATE 2024.09.17
PROJECT NUMBER 2883-01-RC22
SHEET A402

PLAN CHECK REVISION 2

9/20/2024 11:03:18 AM
Autodesk Docs://2883-01_Porterville Fourth St Community Center/2883-01-RC22_Porterville_v22.rvt

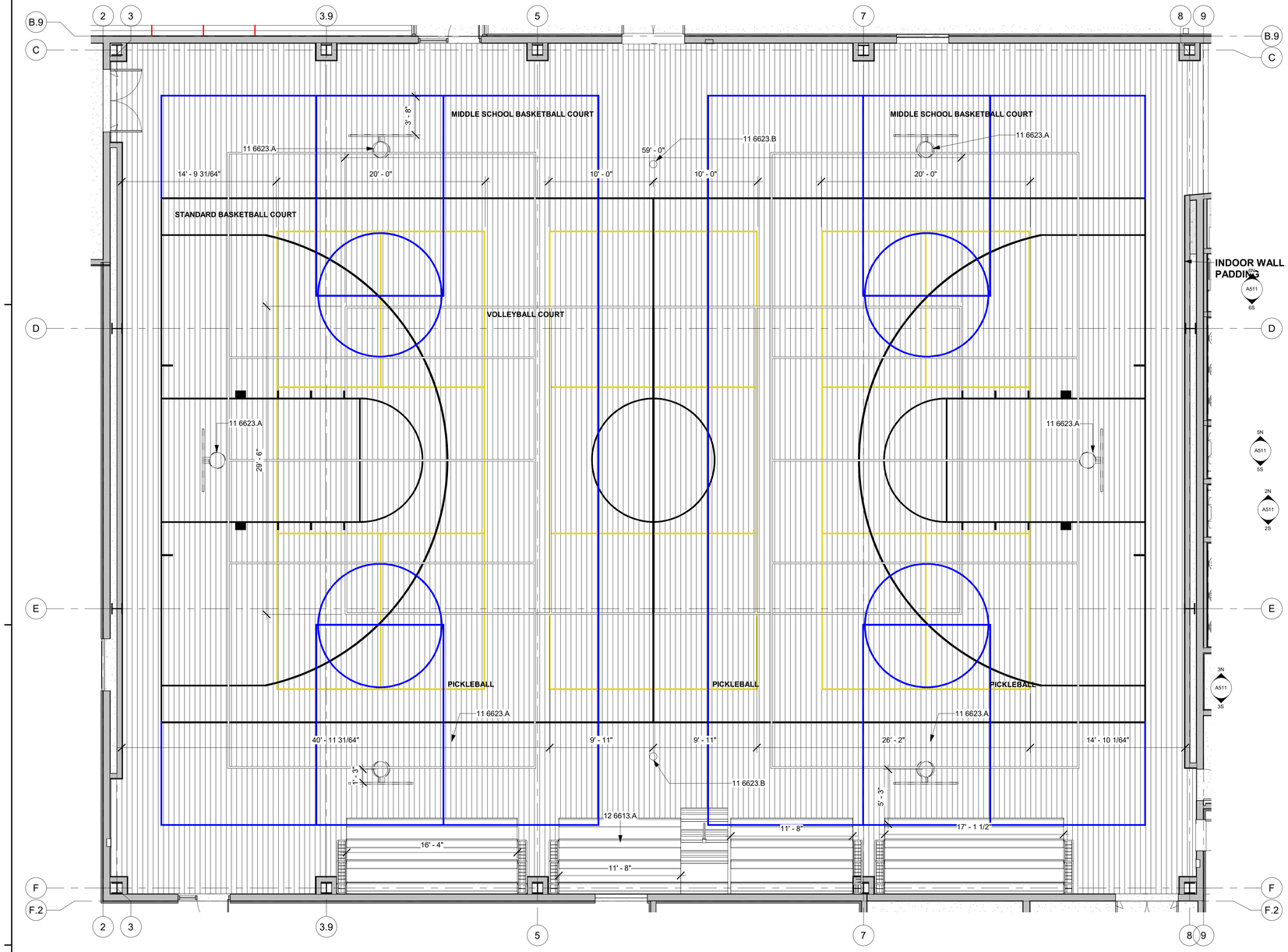

1 GYM

A101 | A403 SCALE: 3/16" = 1'-0"

STRIPING COLORS

- BASKETBALL COURT - BLACK
- BASKETBALL HIGHSCHOOL COURT - BLUE
- VOLLEYBALL COURT - WHITE
- 1 PICKLEBACLL COURT - YELLOW

FLOOR PLAN GENERAL NOTES

1. REFER TO GENERAL NOTES SHEET G-101 FOR ADDITIONAL REQUIREMENTS.
2. REFER TO SHEET A921 FOR WALL TYPES
3. REFER TO STRUCTURAL PLANS FOR FURTHER INFORMATION.
4. REFER TO ELECTRICAL PLANS FOR FURTHER INFORMATION IF PROVIDED.
5. REFER TO MECHANICAL PLANS, DRAWINGS OR REPORTS FOR FURTHER INFORMATION.
6. REFER TO PLUMBING PLANS OR DRAWINGS FOR FURTHER INFORMATION IF PROVIDED.
7. ALL FURNITURE AND EQUIPMENT IS BY OWNER AND IS SHOWN FOR COORDINATION PURPOSES ONLY.
8. ALL CASEWORK SHALL BE PROVIDED BY CONTRACTOR
9. INTERIOR WALL DIMENSIONS ARE TO FACE OF FRAMING UNLESS SPECIFICALLY NOTED OTHERWISE.
10. EXTERIOR DIMENSIONS ARE TO FACE OF SHEATHING UNLESS SPECIFICALLY NOTED OTHERWISE
11. PROVIDE ADEQUATE BLOCKING IN WALLS FOR CABINETS AND OTHER WALL MOUNTED ACCESSORIES INCLUDING BUT NOT LIMITED TO HANDRAILS, SHELVING AND BATHROOM FIXTURES.
12. PROVIDE FIREBLOCKING FOR WALL CAVITIES THAT EXCEED **2022 CBC** HEIGHT LIMITATIONS
13. DOOR AND WINDOW DIMENSIONS ARE CENTERED AT OPENINGS
14. WHERE DOOR IS LOCATED WITHOUT DIMENSION AT THE CORNER OF A ROOM IT SHALL BE 4" FROM FACE OF FRAMING OF ADJACENT WALL TO ROUGH DOOR OPENING
15. SEE CODE ANALYSIS FOR LOCATIONS OF FIRE PARTITIONS AND FIRE BARRIERS
16. WHERE RECESSED FIXTURES OCCUR IN WALLS OR HORIZONTAL ASSEMBLIES, THE FIRE RATING OF THOSE ASSEMBLIES SHALL BE MAINTAINED
17. AT ALL PENETRATIONS AND INTERSECTIONS OF FIRE-RATED PARTITIONS, PROVIDE FIRE SEALANT AND/OR FIRE STOPPING TO MAINTAIN CONTINUITY OF PARTITION RATING

KEYNOTES

LEGEND

A6	**EXTERIOR WALL**- 2X6 WOOD STUD W/ PLYWOOD SHEATHING, RIGID INSULATION AND 1-1/2" METAL PANEL FINISH, ONE LAYER GYPSUM WALL BOARD INTERIOR.
A8	**EXTERIOR WALL**- 2X8 WOOD STUD W/ PLYWOOD SHEATHING, RIGID INSULATION AND 1-1/2" METAL PANEL FINISH, ONE LAYER GYPSUM WALL BOARD INTERIOR.
B	**EXTERIOR WALL** - 2X6 WOOD STUD W/ PLYWOOD SHEATHING, RIGID INSULATION AND FIBER-CEMENT BOARD ARCHITECTURAL , ONE LAYER OF GYPSUM WALL BOARD INTERIOR.
E4	**INTERIOR**- 2X4 WOOD STUD. REFER TO FINISH PLAN FOR WALL FINISH
E6	**INTERIOR**- 2X6 FRAMING WOOD STUD. REFER TO FINISH PLAN FOR WALL FINISH
E8	**INTERIOR**- 2X8 FRAMING WOOD STUD. REFER TO FINISH PLAN FOR WALL FINISH
F4	**INTERIOR**- 2X4 WOOD STUD FURRED. REFER TO FINISH PLAN FOR WALL FINISH
F6	**INTERIOR**- 2X6 WOOD STUD FURRED. REFER TO FINISH PLAN FOR WALL FINISH
F6P	**INTERIOR**- 2X6 WOOD STUD FURRED WITH PADDING REFER TO FINISH PLAN FOR WALL FINISH
G6	**INTERIOR**- 2X6 FRAMING WOOD PARTY WALL STAGGERED STUD. REFER TO FINISH PLAN FOR WALL FINISH
Sx	STOREFRONT ASSEMBLY REFER TO DOOR WINDOW SCHEDULE FOR MORE INFORMATION
	INDICATES DEPRESSED SLAB REFER TO A501 - FINISH PLAN AND STRUCTURAL 6/S-101 FOR MORE INFORMATION

rrm design group
rrmdesign.com | (805) 543-1794
3765 SOUTH HIGUERA STREET SUITE 102
SAN LUIS OBISPO, CA 93401

THE INCLUDED DRAWINGS, SPECIFICATIONS, IDEAS, DESIGNS AND ARRANGEMENTS REPRESENTED THEREBY ARE AND SHALL REMAIN THE PROPERTY OF RRM DESIGN GROUP AND NO PART THEREOF SHALL BE COPIED, DISCLOSED TO OTHERS OR SUBSTANTIALLY USED FOR ANY PURPOSE WITHOUT THE WRITTEN CONSENT OF THE PROJECT FOR WHICH THEY HAVE BEEN PREPARED AND DEVELOPED WITHOUT THE WRITTEN CONSENT OF RRM DESIGN GROUP. VISUAL CONTACT WITH THESE DRAWINGS OR SPECIFICATIONS SHALL CONSTITUTE CONCLUSIVE EVIDENCE OF ACCEPTANCE OF THESE RESTRICTIONS. SUBMITTAL OF PRELIMINARY DRAWINGS FOR REVIEW SHALL NOT BE CONSIDERED A WAIVER OF CALIFORNIA DESIGN GROUP'S RIGHTS.
RRM DESIGN GROUP COPYRIGHT 2022
RRM IS A CALIFORNIA CORPORATION

LICENSED ARCHITECT
MICHELLE SCOTT LUCAS
C39678
10-31-25
RENEWAL DATE
STATE OF CALIFORNIA

CONSULTANT

AGENCY

FOURTH ST COMMUNITY CENTER AND PARK

HENDERSON AVE., PORTERVILLE, CA 93257

ENLARGED PLANS - COURT STRIPING

NO.	REVISION	DATE
1	PLAN CHECK REVISION 1	05/17/24

PLAN CHECK REVISION 2

PROJECT MANAGER TSL
DRAWN BY MC, NA, PM
CHECKED BY DD, KF
DATE 2024.09.17
PROJECT NUMBER 2883-01-RC22
SHEET A403

9/20/2024 11:03:20 AM
Autodesk Docs://2883-01_Porterville Fourth St Community Center/2883-01-RC22_Porterville_v22.rvt

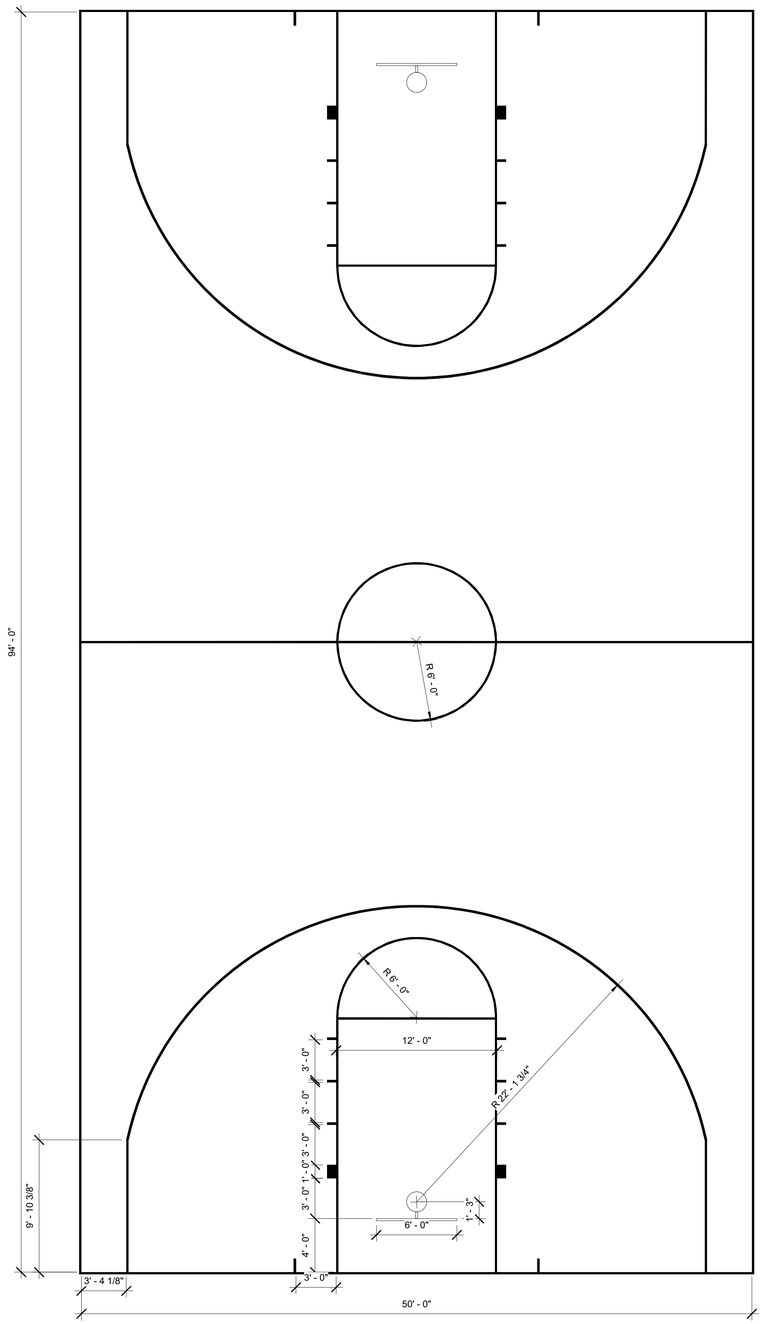

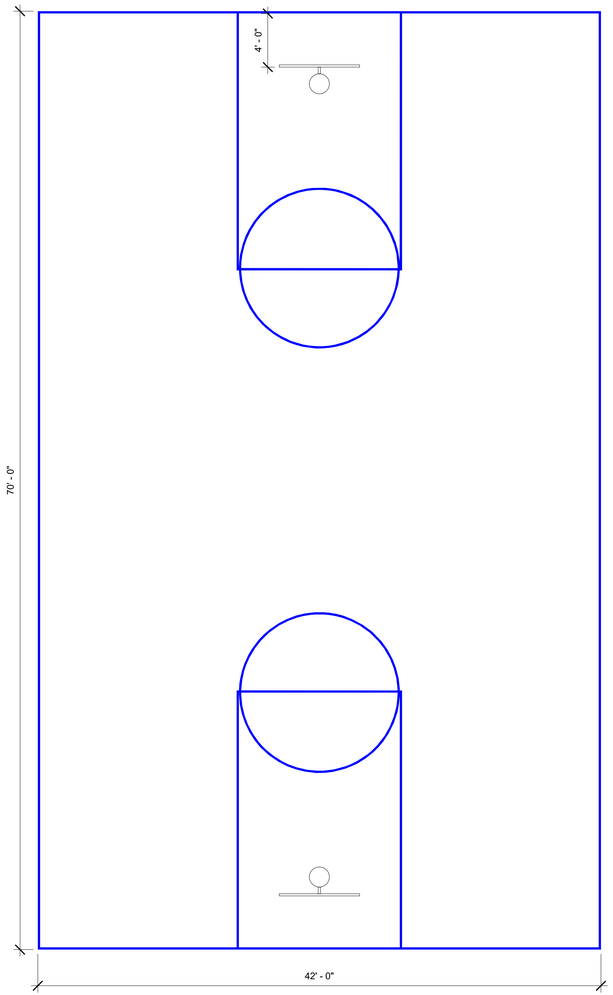

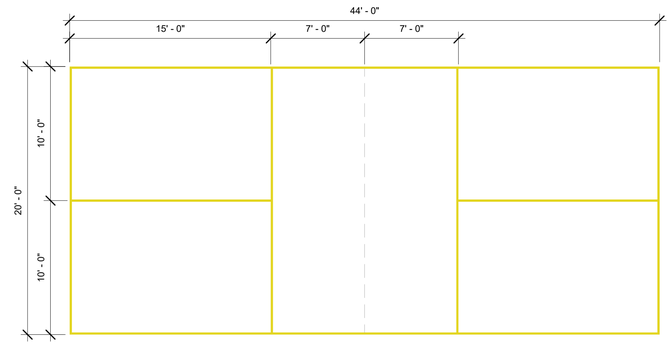

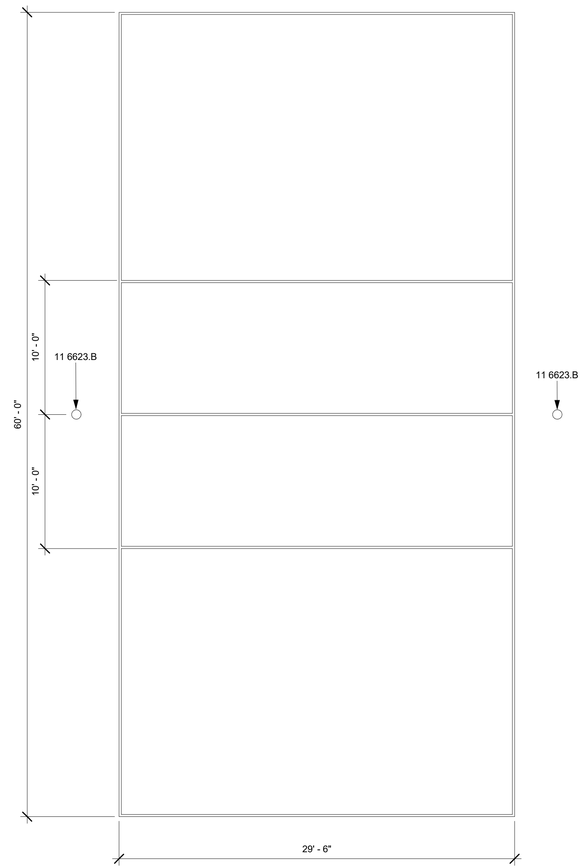

BLACK	BASKETBALL COURT
BLUE	BASKETBALL HIGHSCHOOL COURT
WHITE	VOLLEYBALL COURT
YELLOW	PICKLEBACLL COURT

1 COURTS
A404 SCALE: 3/16" = 1'-0"

9/20/2024 11:03:20 AM
Autodesk Docs://2883-01_Porterville Fourth St Community Center/2883-01-RC22_Porterville_v22.rvt

rrm design group
rrmdesign.com | (805) 543-1794
3765 SOUTH HIGUERA STREET, SUITE 102
SAN LUIS OBISPO, CA 93401

THE INCLUDED DRAWINGS, SPECIFICATIONS, IDEAS, DESIGNS AND ARRANGEMENTS REPRESENTED THEREBY ARE AND SHALL REMAIN THE PROPERTY OF RRM DESIGN GROUP AND NO PART THEREOF SHALL BE COPIED, DISCLOSED TO OTHERS OR USED IN CONNECTION WITH ANY WORK OR PROJECT OTHER THAN THE SPECIFIED PROJECT FOR WHICH THEY HAVE BEEN PREPARED AND DEVELOPED WITHOUT THE WRITTEN CONSENT OF RRM DESIGN GROUP. VISUAL CONTACT WITH THESE DRAWINGS OR SPECIFICATIONS SHALL CONSTITUTE CONCLUSIVE EVIDENCE OF ACCEPTANCE OF THESE RESTRICTIONS. SUBMITTAL OF THESE DOCUMENTS FOR PUBLIC AGENCY REVIEW SHALL NOT BE CONSIDERED A WAIVER OF RRM DESIGN GROUP'S RIGHTS.
RRM DESIGN GROUP COPYRIGHT 2022
RRM IS A CALIFORNIA CORPORATION

LICENSED ARCHITECT
MADDELIS SCOTT LUPTON
C39678
10-31-25
RENEWAL DATE
STATE OF CALIFORNIA

CONSULTANT

AGENCY

FOURTH ST COMMUNITY CENTER AND PARK
HENDERSON AVE., PORTERVILLE, CA 93257

ENLARGED PLANS - COURTS

NO.	REVISION	DATE
△		
△		
△		
△		
△		
△		

PROJECT MANAGER
TSL
DRAWN BY
MC, NA, PM
CHECKED BY
DD, KF
DATE
2024.09.17
PROJECT NUMBER
2883-01-RC22
SHEET
A404

PLAN CHECK REVISION 2

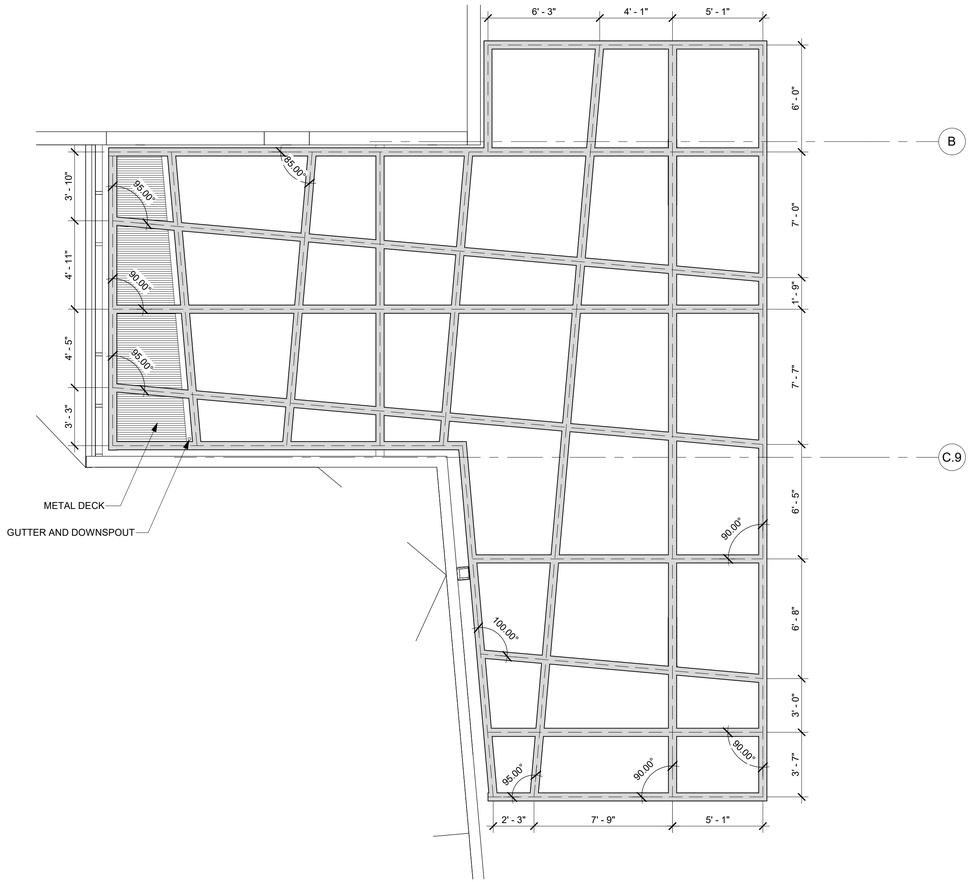

3 ENLARGED TRELLIS PLAN

A121 | A405 SCALE: 1/4" = 1'-0"

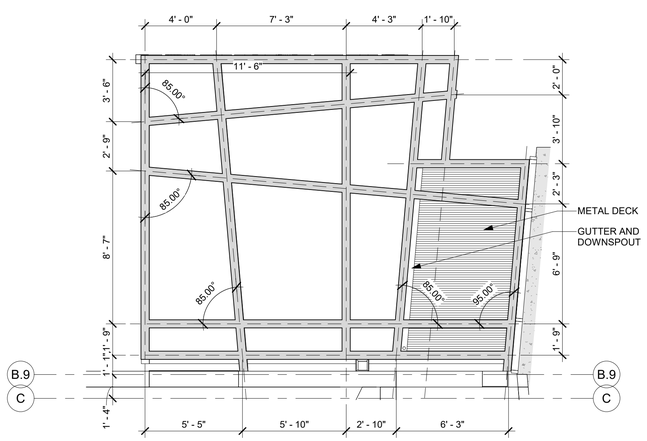

2 ENLARGED TRELLIS PLAN

A121 | A405 SCALE: 1/4" = 1'-0"

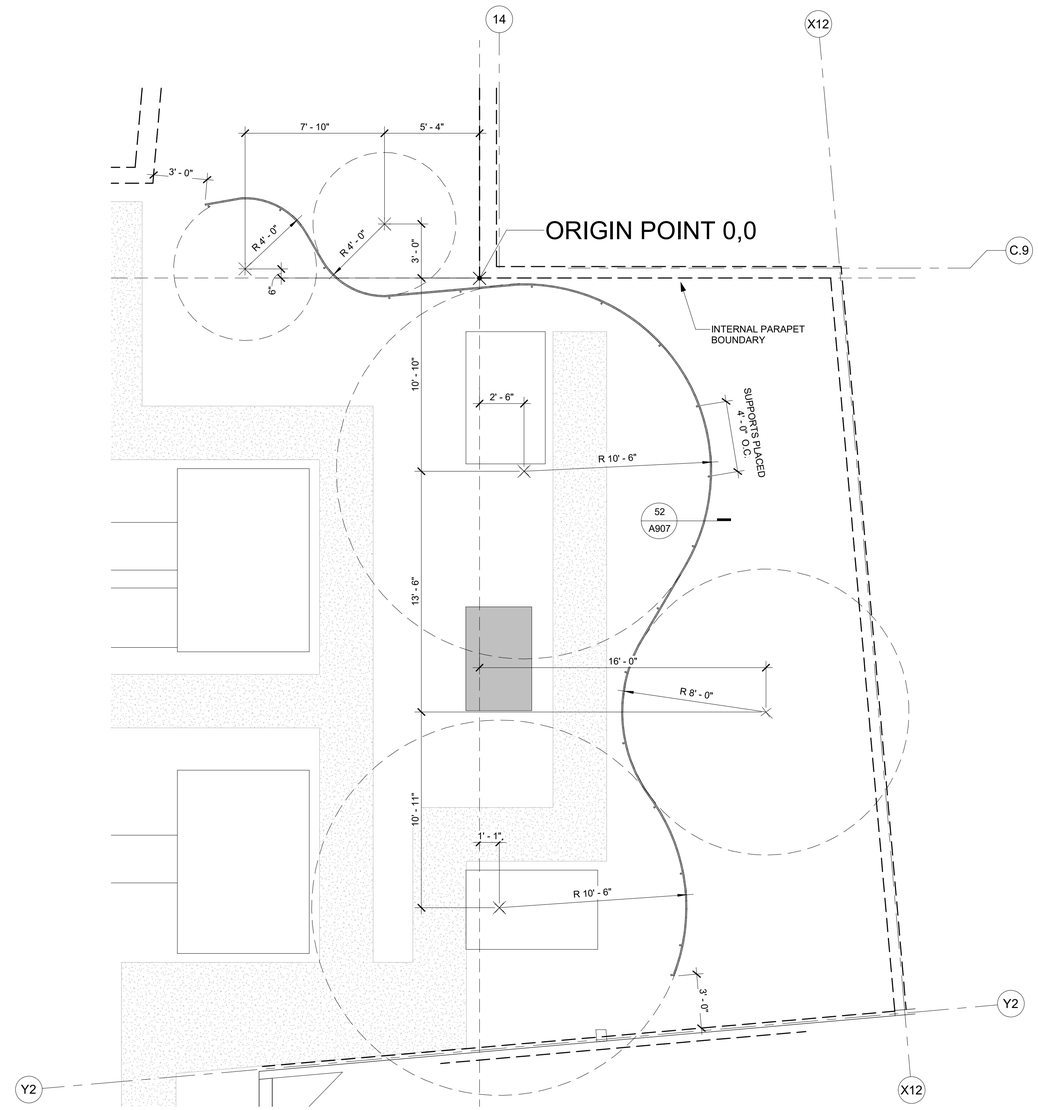

1 HVAC SCREEN ENLARGED PLAN

A121 | A405 SCALE: 1/4" = 1'-0"

rrm design group

rrmdesign.com | (805) 543-1794
3765 SOUTH HIGUERA STREET, SUITE 102
SAN LUIS OBISPO, CA 93401

THE INCLUDED DRAWINGS, SPECIFICATIONS, IDEAS, DESIGNS AND ARRANGEMENTS REPRESENTED THEREBY ARE AND SHALL REMAIN THE PROPERTY OF RRM DESIGN GROUP AND NO PART THEREOF SHALL BE COPIED, DISCLOSED TO OTHERS OR USED IN CONNECTION WITH ANY WORK OR PROJECT OTHER THAN THE SPECIFIED PROJECT FOR WHICH THEY HAVE BEEN PREPARED AND DEVELOPED WITHOUT THE WRITTEN CONSENT OF RRM DESIGN GROUP. VISUAL CONTACT WITH THESE DRAWINGS OR SPECIFICATIONS SHALL CONSTITUTE CONCLUSIVE EVIDENCE OF ACCEPTANCE OF THESE RESTRICTIONS. SUBMITTAL OF THESE DOCUMENTS FOR PUBLIC AGENCY REVIEW SHALL NOT BE CONSIDERED A WAIVER OF RRM DESIGN GROUP'S RIGHTS.

RRM DESIGN GROUP COPYRIGHT 2022
RRM IS A CALIFORNIA CORPORATION

LICENSED ARCHITECT
MADELEINE SCOTT LUPTON
C39678
10-31-25
RENEWAL DATE
STATE OF CALIFORNIA

CONSULTANT

AGENCY

FOURTH ST COMMUNITY CENTER AND PARK
HENDERSON AVE., PORTERVILLE, CA 93257

ENLARGED PLANS - HVAC SCREEN AND TRELLIS

NO.	REVISION	DATE
△		
△		
△		
△		
△		
△		

PROJECT MANAGER: TSL
DRAWN BY: MC, NA, PM
CHECKED BY: DD, KF
DATE: 2024.09.17
PROJECT NUMBER: 2883-01-RC22
SHEET: A405

PLAN CHECK REVISION 2

9/20/2024 11:03:21 AM
Autodesk Docs://2883-01_Porterville Fourth St Community Center/2883-01-RC22_Porterville_v22.rvt

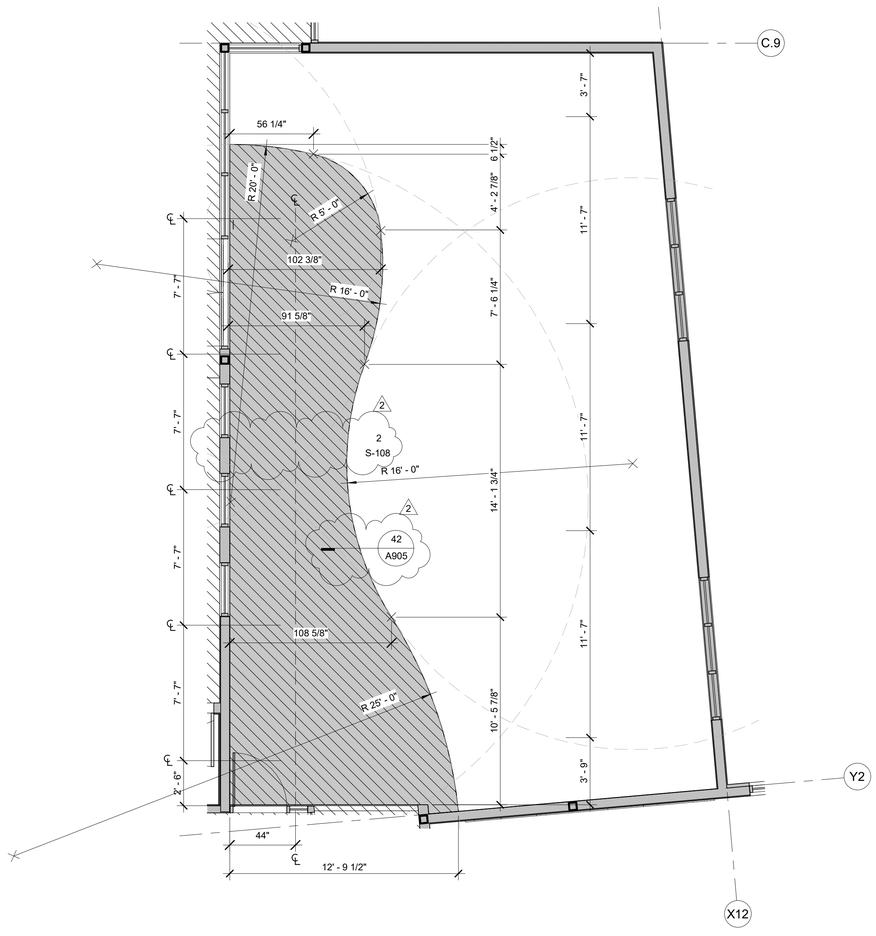

2 ENLARGED RCP - TEEN STUDY

A111 | A406 SCALE: 1/4" = 1'-0"

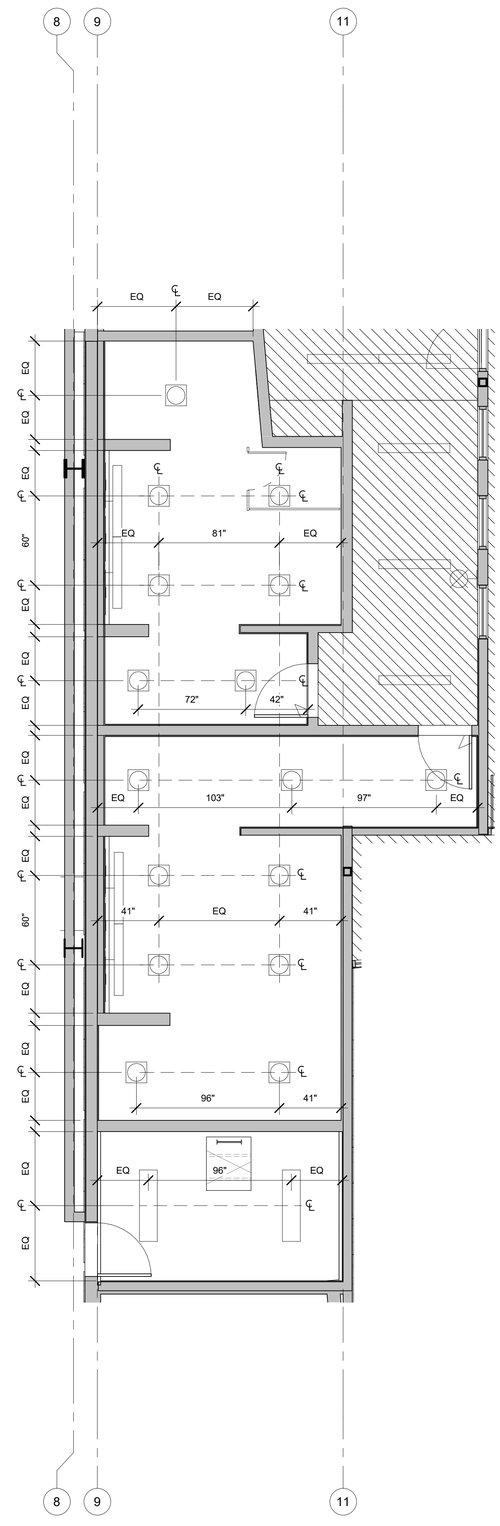

1 ENLARGED RESTROOM RCP

A111 | A406 SCALE: 1/4" = 1'-0"

FLOOR PLAN GENERAL NOTES

1. REFER TO GENERAL NOTES SHEET G-101 FOR ADDITIONAL REQUIREMENTS.
2. REFER TO SHEET A921 FOR WALL TYPES
3. REFER TO STRUCTURAL PLANS FOR FURTHER INFORMATION.
4. REFER TO ELECTRICAL PLANS FOR FURTHER INFORMATION IF PROVIDED.
5. REFER TO MECHANICAL PLANS, DRAWINGS OR REPORTS FOR FURTHER INFORMATION.
6. REFER TO PLUMBING PLANS OR DRAWINGS FOR FURTHER INFORMATION IF PROVIDED.
7. ALL FURNITURE AND EQUIPMENT IS BY OWNER AND IS SHOWN FOR COORDINATION PURPOSES ONLY.
8. ALL CASEWORK SHALL BE PROVIDED BY CONTRACTOR
9. INTERIOR WALL DIMENSIONS ARE TO FACE OF FRAMING UNLESS SPECIFICALLY NOTED OTHERWISE.
10. EXTERIOR DIMENSIONS ARE TO FACE OF SHEATHING UNLESS SPECIFICALLY NOTED OTHERWISE
11. PROVIDE ADEQUATE BLOCKING IN WALLS FOR CABINETS AND OTHER WALL MOUNTED ACCESSORIES INCLUDING BUT NOT LIMITED TO HANDRAILS, SHELVING AND BATHROOM FIXTURES.
12. PROVIDE FIREBLOCKING FOR WALL CAVITIES THAT EXCEED **2022 CBC** HEIGHT LIMITATIONS
13. DOOR AND WINDOW DIMENSIONS ARE CENTERED AT OPENINGS
14. WHERE DOOR IS LOCATED WITHOUT DIMENSION AT THE CORNER OF A ROOM IT SHALL BE 4" FROM FACE OF FRAMING OF ADJACENT WALL TO ROUGH DOOR OPENING
15. SEE CODE ANALYSIS FOR LOCATIONS OF FIRE PARTITIONS AND FIRE BARRIERS
16. WHERE RECESSED FIXTURES OCCUR IN WALLS OR HORIZONTAL ASSEMBLIES, THE FIRE RATING OF THOSE ASSEMBLIES SHALL BE MAINTAINED
17. AT ALL PENETRATIONS AND INTERSECTIONS OF FIRE-RATED PARTITIONS, PROVIDE FIRE SEALANT AND/OR FIRE STOPPING TO MAINTAIN CONTINUITY OF PARTITION RATING

KEYNOTES

LEGEND

- XX'-X" CEILING HEIGHT (SEE PLAN FOR ACTUAL HEIGHTS)
- INTERIOR - GYPSUM BOARD CEILING
- INTERIOR - GYPSUM BOARD SOFFIT
- INTERIOR - ACOUSTICAL TILE CEILING
- INTERIOR - ACOUSTIC BLADES
- INTERIOR - TECTUM CIRECT-ATTACH CEILING PANELS 48" X 96"
- EXTERIOR - CEMENT PLASTER SOFFIT
- MECHANICAL EQUIPMENT, REFER TO MECHANICAL PLANS
- LIGHT FIXTURE, REFER TO ELECTRICAL PLANS
- ACCENT LIGHT, REFER TO ELECTRICAL PLANS
- ILLUMINATED EXIT SIGN, REFER TO ELECTRICAL PLANS

rrm design group
rrmdesign.com | (805) 543-1794
3765 SOUTH HIGUERA STREET SUITE 102
SAN LUIS OBISPO, CA 93401

THE INCLUDED DRAWINGS, SPECIFICATIONS, IDEAS, DESIGNS AND ARRANGEMENTS REPRESENTED THEREBY ARE AND SHALL REMAIN THE PROPERTY OF RRM DESIGN GROUP AND NO PART THEREOF SHALL BE COPIED, DISCLOSED TO OTHERS OR SUBSTANTIALLY USED FOR ANY PURPOSE WITHOUT THE WRITTEN CONSENT OF RRM DESIGN GROUP. THE PROJECT FOR WHICH THEY HAVE BEEN PREPARED AND DEVELOPED WITHOUT THE WRITTEN CONSENT OF RRM DESIGN GROUP. VISUAL CONTACT WITH THESE DRAWINGS OR SPECIFICATIONS SHALL CONSTITUTE CONCLUSIVE EVIDENCE OF ACCEPTANCE OF THESE RESTRICTIONS. SUBMITTAL OF PRELIMINARY DRAWINGS FOR REVIEW SHALL NOT BE CONSTRUED AS WAIVER OF RRM DESIGN GROUP'S RIGHTS.
RRM DESIGN GROUP COPYRIGHT 2022
RRM IS A CALIFORNIA CORPORATION

LICENSED ARCHITECT
MARGIE SCOTT LUSK
C39878
10-31-25
RENEWAL DATE
STATE OF CALIFORNIA

CONSULTANT

AGENCY

FOURTH ST COMMUNITY CENTER AND PARK
HENDERSON AVE., PORTERVILLE, CA 93257

ENLARGED PLANS - RCP

NO.	REVISION	DATE
2	PLAN CHECK REVISION 2	09/17/24

PROJECT MANAGER
TSL
DRAWN BY MC, NA, PM
CHECKED BY DD, KF
DATE 2024.09.17
PROJECT NUMBER 2883-01-RC22
SHEET A406

PLAN CHECK REVISION 2

9/20/2024 11:03:22 AM
Autodesk Docs://2883-01_Porterville Fourth St Community Center/2883-01-RC22_Porterville_v22.rvt

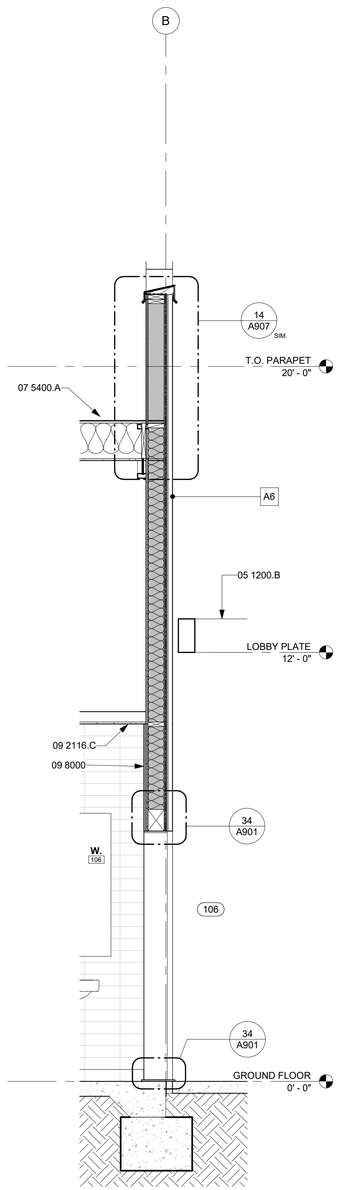

5 WALL SECTION 5

A501 A411 SCALE: 1/2" = 1'-0"

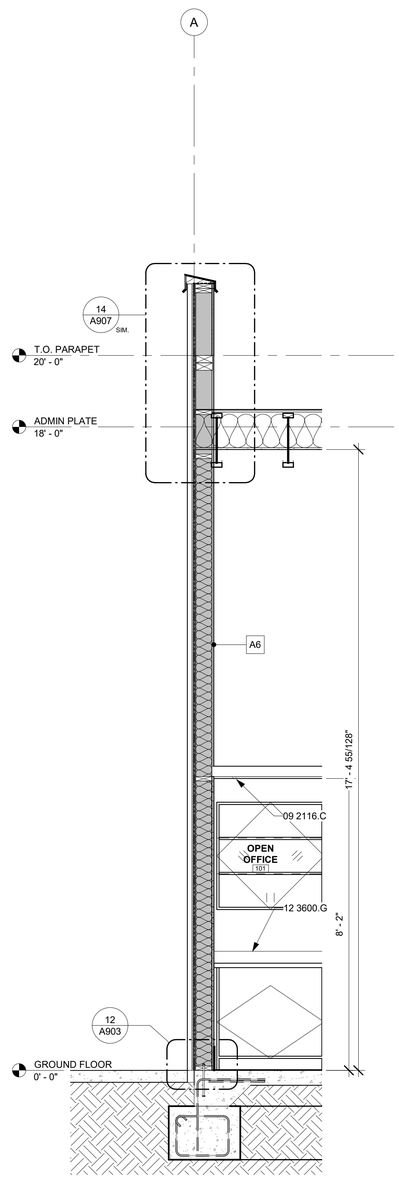

4 WALL SECTION 4

A501 A411 SCALE: 1/2" = 1'-0"

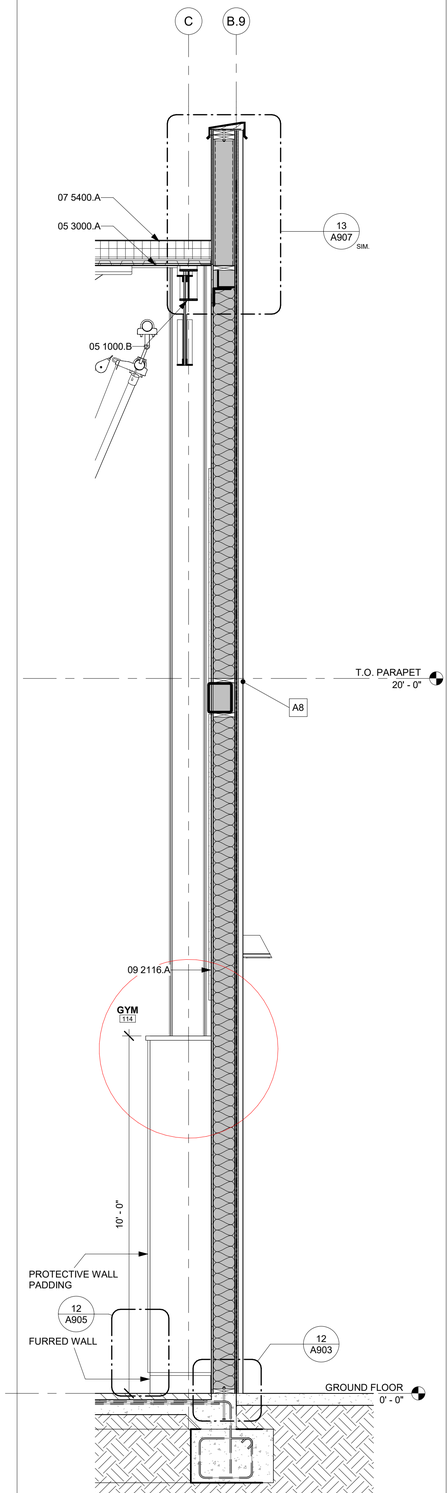

3 WALL SECTION 3

A501 A411 SCALE: 1/2" = 1'-0"

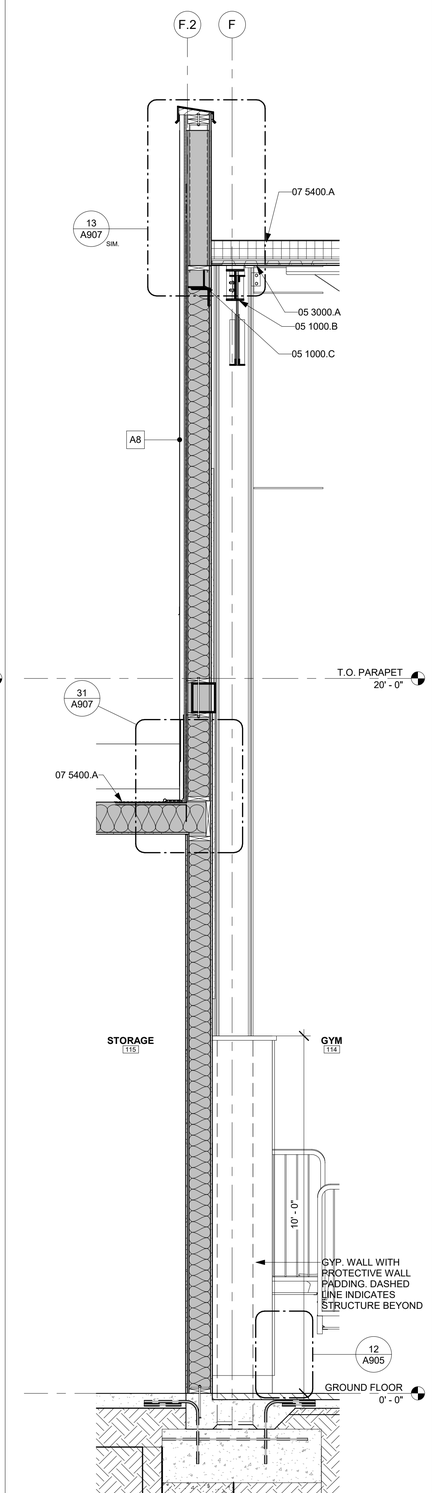

2 WALL SECTION 1

A501 A411 SCALE: 1/2" = 1'-0"

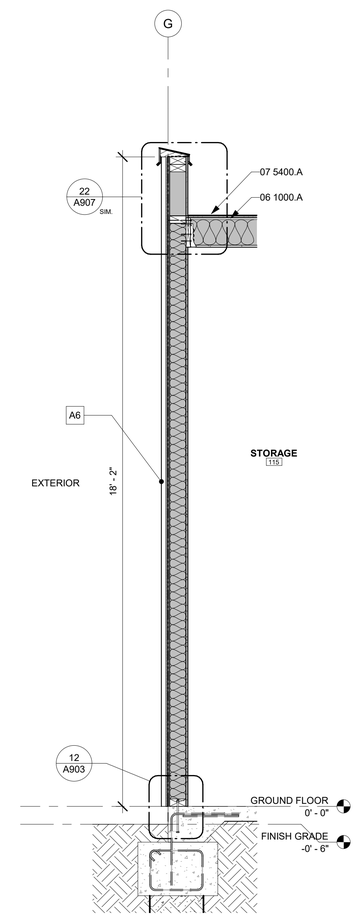

1 WALL SECTION 2

A501 A411 SCALE: 1/2" = 1'-0"

KEYNOTES

05 1000.B	STEEL BEAM REFER TO STRUCTURAL DRAWINGS
05 1000.C	STEEL GIRT REFER TO STRUCTURAL DRAWINGS
05 1200.B	FABRICATED METAL CANOPY. REFER TO STRUCTURAL DRAWINGS
05 3000.A	METAL DECK REFER TO STRUCTURAL.
06 1000.A	ROOF FRAMING. REFER TO STRUCTURAL
07 5400.A	THERMOPLASTIC MEMBRANE ROOFING SYSTEM, CLASS A – SEE SPECIFICATIONS. REFER TO DETAIL 11/2A-921 FOR ROOF ASSEMBLY.
09 2116.A	GYPSUM BOARD
09 2116.C	GYPSUM BOARD CEILING ASSEMBLY
09 8000	ACOUSTIC TREATMENT
12 3600.G	PLASTIC LAMINATE WORKSURFACE W/METAL SUPPORT BRACKETS. REFER TO DETAIL 21/A905

rrm design group
rrmdesign.com | (805) 543-1794
3765 SOUTH HIGUERA STREET SUITE 102
SAN LUIS OBISPO, CA 93401

THE INCLUDED DRAWINGS, SPECIFICATIONS, IDEAS, DESIGNS AND ARRANGEMENTS REPRESENTED THEREBY ARE AND SHALL REMAIN THE PROPERTY OF RRM DESIGN GROUP AND NO PART THEREOF SHALL BE COPIED, DISCLOSED TO OTHERS OR USED IN CONNECTION WITH ANY WORK OR PROJECT OTHER THAN THE SPECIFIED PROJECT FOR WHICH THEY HAVE BEEN PREPARED AND DEVELOPED WITHOUT THE WRITTEN CONSENT OF RRM DESIGN GROUP. VISUAL CONTACT WITH THESE DRAWINGS OR SPECIFICATIONS SHALL CONSTITUTE CONCLUSIVE EVIDENCE OF ACCEPTANCE OF THESE RESTRICTIONS. SUBMITTAL OF PRELIMINARY DRAWINGS FOR REVIEW SHALL NOT BE CONSIDERED A WAIVER OF RRM DESIGN GROUP'S RIGHTS.
RRM DESIGN GROUP COPYRIGHT 2022
RRM IS A CALIFORNIA CORPORATION

CONSULTANT

AGENCY

FOURTH ST COMMUNITY CENTER AND PARK
HENDERSON AVE., PORTERVILLE, CA 93257

WALL SECTIONS

NO.	REVISION	DATE

PROJECT MANAGER
TSL

DRAWN BY MC, NA, PM
CHECKED BY DD, KF

DATE
2024.09.17

PROJECT NUMBER
2883-01-RC22

SHEET
A411

PLAN CHECK REVISION 2

9/20/2024 11:03:23 AM
Autodesk Docs://2883-01_Porterville Fourth St Community Center/2883-01-RC22_Porterville_v22.rvt

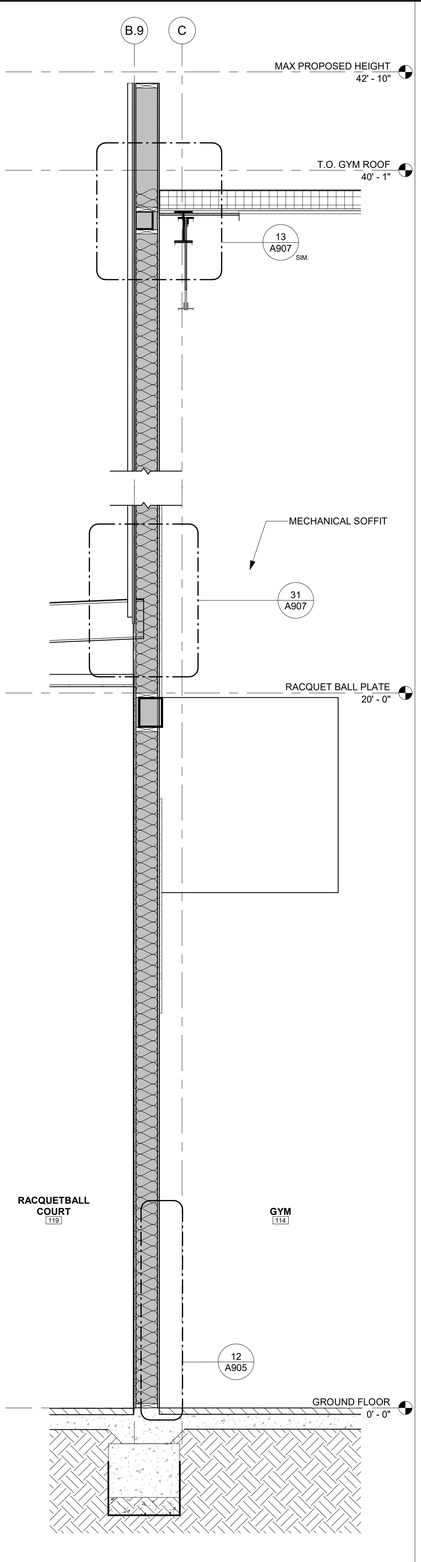

10 WALL SECTION 10

A303 | A412 SCALE: 1/2" = 1'-0"

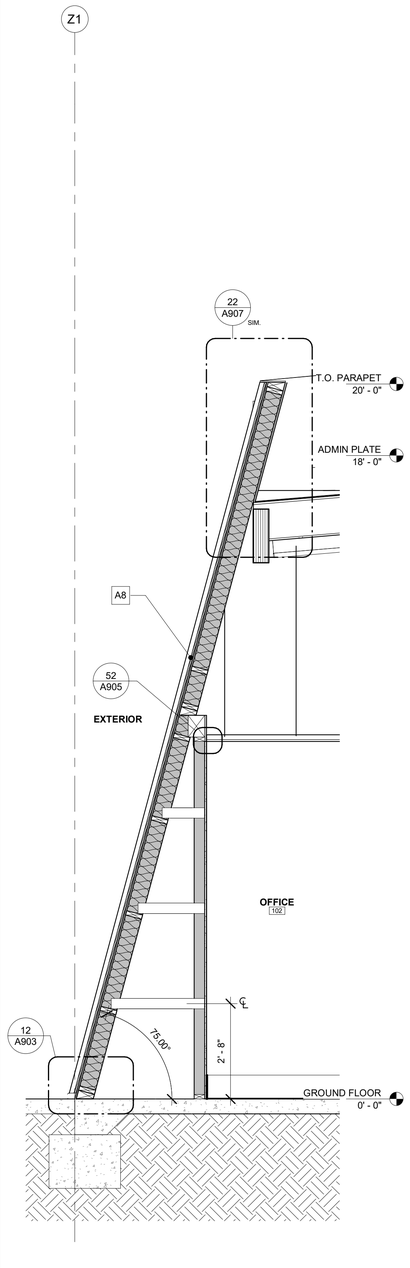

9 WALL SECTION 9

A101 | A412 SCALE: 1/2" = 1'-0"

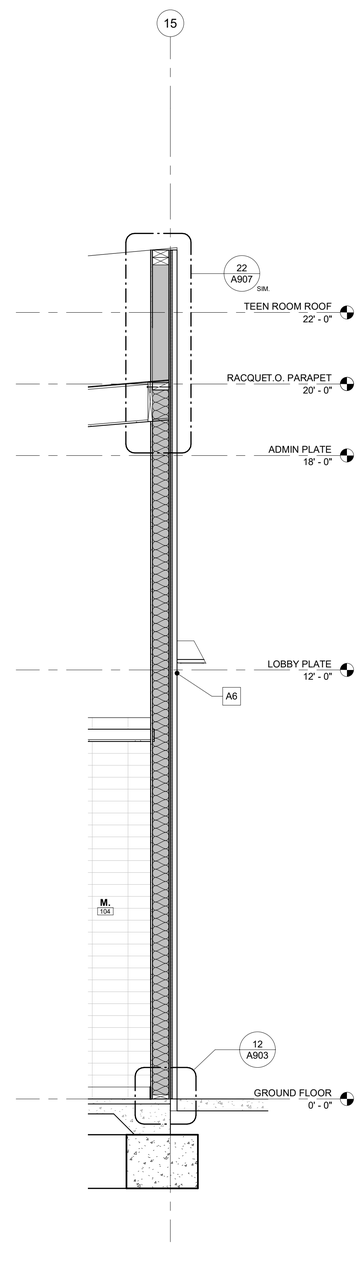

8 WALL SECTION 8

A303 | A412 SCALE: 1/2" = 1'-0"

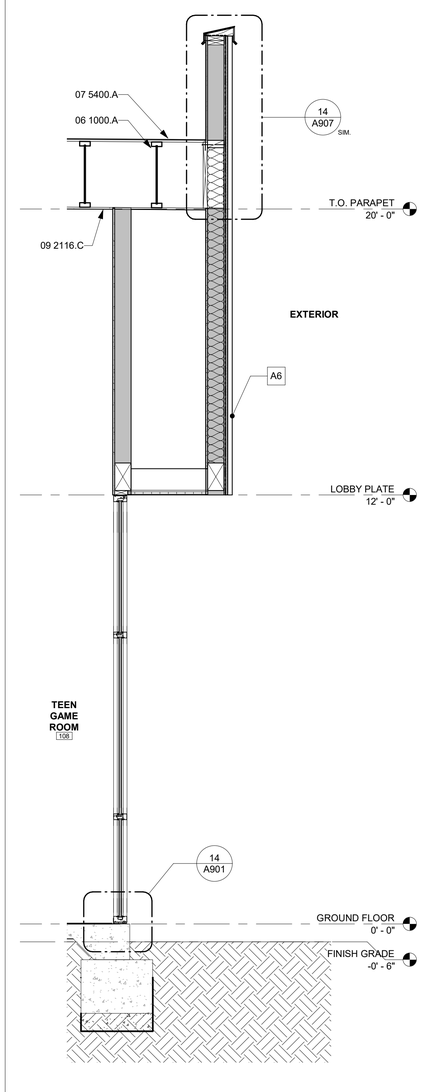

7 WALL SECTION 7

A301 | A412 SCALE: 1/2" = 1'-0"

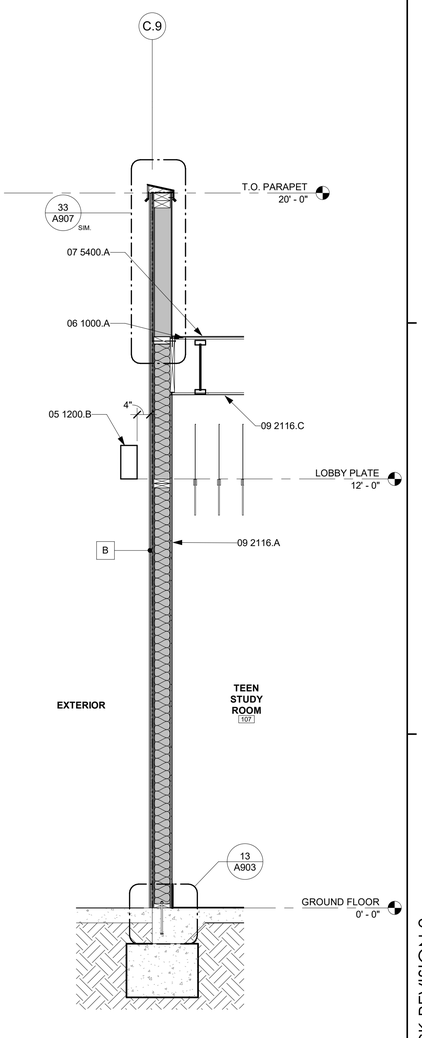

6 WALL SECTION 6

A301 | A412 SCALE: 1/2" = 1'-0"

KEYNOTES

05 1200.B	FABRICATED METAL CANOPY. REFER TO STRUCTURAL DRAWINGS
06 1000.A	ROOF FRAMING. REFER TO STRUCTURAL
06 1000.O	LAMINATED VENEER LUMBER PER STRUCTURAL.
07 5400.A	THERMOPLASTIC MEMBRANE ROOFING SYSTEM, CLASS A – SEE SPECIFICATIONS. REFER TO DETAIL 11/2A-921 FOR ROOF ASSEMBLY.
09 2116.A	GYPSUM BOARD
09 2116.C	GYPSUM BOARD CEILING ASSEMBLY

rrm design group
rrmdesign.com | (805) 543-1794
3765 SOUTH HIGUERA STREET, SUITE 102
SAN LUIS OBISPO, CA 93401

THE INCLUDED DRAWINGS, SPECIFICATIONS, IDEAS, DESIGNS AND ARRANGEMENTS REPRESENTED THEREBY ARE AND SHALL REMAIN THE PROPERTY OF RRM DESIGN GROUP AND NO PART THEREOF SHALL BE COPIED, DISCLOSED TO OTHERS OR USED IN CONNECTION WITH ANY WORK OR PROJECT OTHER THAN THE SPECIFIED PROJECT FOR WHICH THEY HAVE BEEN PREPARED AND DEVELOPED WITHOUT THE WRITTEN CONSENT OF RRM DESIGN GROUP. VISUAL CONTACT WITH THESE DRAWINGS OR SPECIFICATIONS SHALL CONSTITUTE CONCLUSIVE EVIDENCE OF ACCEPTANCE OF THESE RESTRICTIONS. SUBMITTAL OF PRELIMINARY DRAWINGS FOR REVIEW SHALL NOT BE CONSIDERED A WAIVER OF RRM DESIGN GROUP'S RIGHTS.
RRM DESIGN GROUP COPYRIGHT 2022
RRM IS A CALIFORNIA CORPORATION

CONSULTANT

AGENCY

FOURTH ST COMMUNITY CENTER AND PARK
HENDERSON AVE., PORTERVILLE, CA 93257

WALL SECTIONS

NO.	REVISION	DATE
△		
△		
△		
△		
△		
△		

PROJECT MANAGER: TSL
DRAWN BY: MC, NA, PM
CHECKED BY: DD, KF
DATE: 2024.09.17
PROJECT NUMBER: 2883-01-RC22
SHEET: A412

PLAN CHECK REVISION 2

9/20/2024 11:03:25 AM
Autodesk Docs://2883-01_Porterville Fourth St Community Center/2883-01-RC22_Porterville_v22.rvt

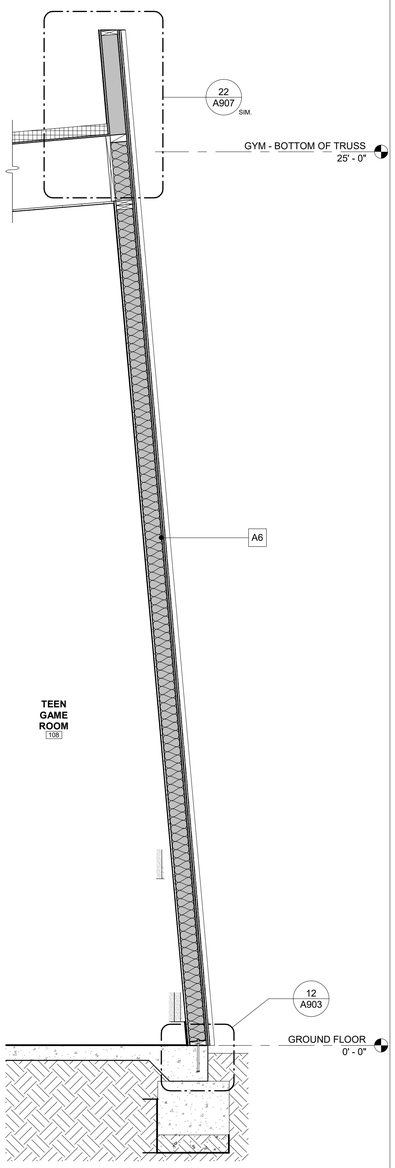

11 WALL SECTION 11
A413 SCALE: 1/2" = 1'-0"

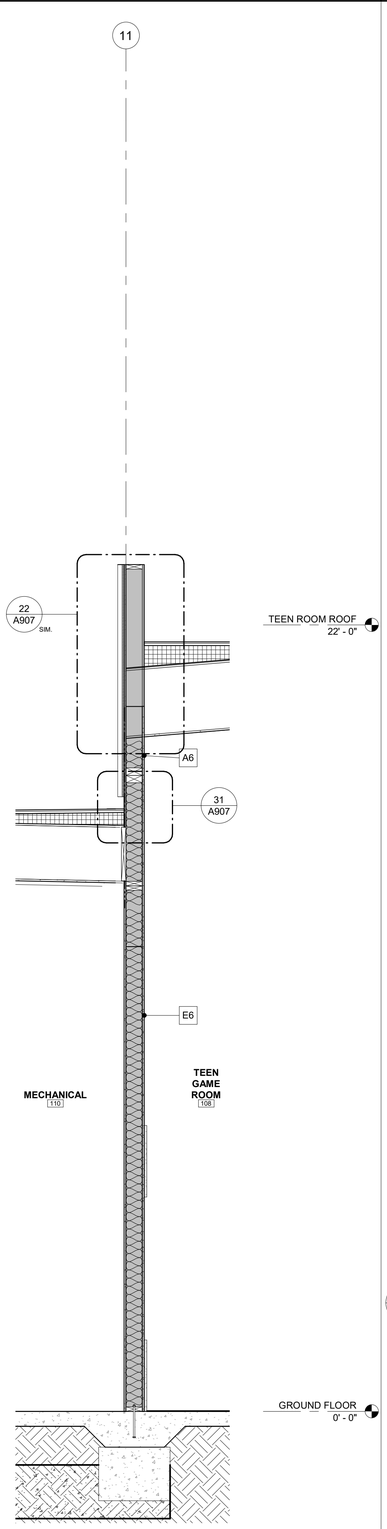

10 WALL SECTION 10
A202 A413 SCALE: 1/2" = 1'-0"

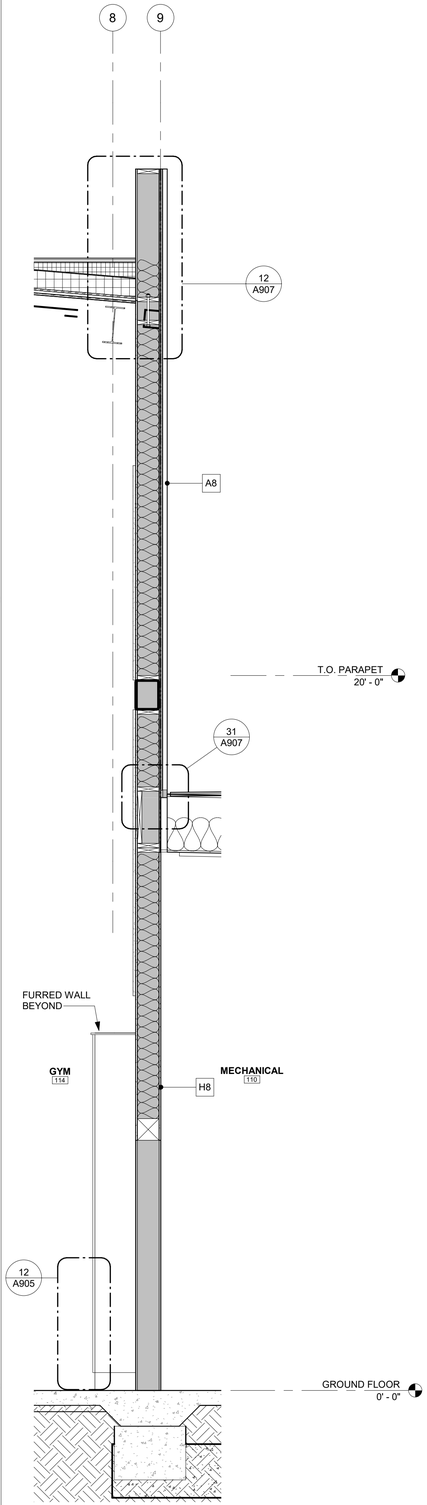

9 WALL SECTION 9
A202 A413 SCALE: 1/2" = 1'-0"

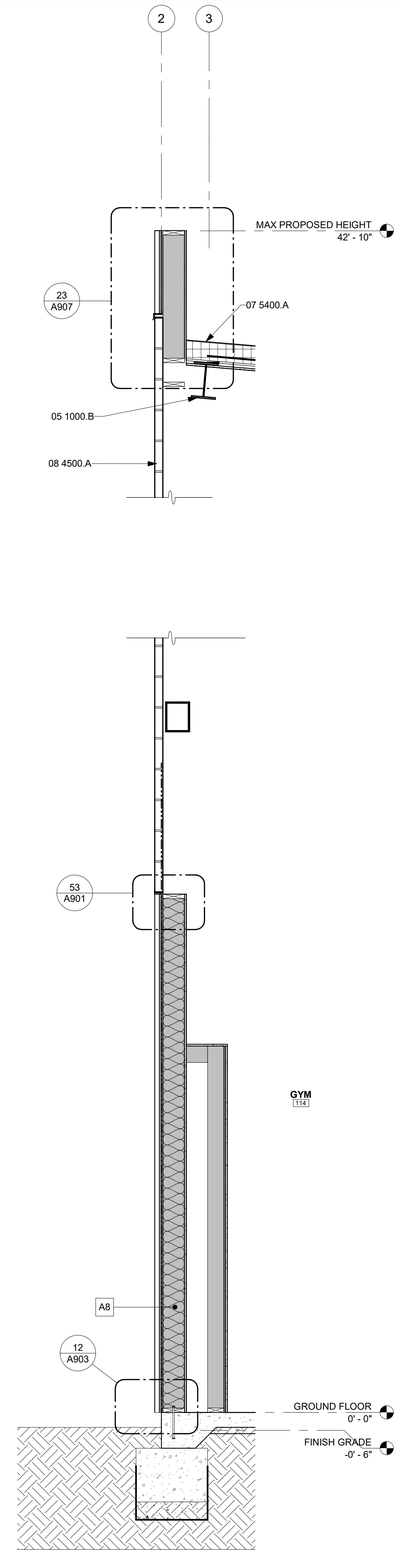

8 WALL SECTION 8
A202 A413 SCALE: 1/2" = 1'-0"

KEYNOTES

05 1000.B	STEEL BEAM REFER TO STRUCTURAL DRAWINGS
07 5400.A	THERMOPLASTIC MEMBRANE ROOFING SYSTEM, CLASS A – SEE SPECIFICATIONS. REFER TO DETAIL 11/2A-921 FOR ROOF ASSEMBLY.
08 4500.A	TRANSLUCENT WALL PANEL

rrm design group
rrmdesign.com | (805) 543-1794
3765 SOUTH HIGUERA STREET SUITE 102
SAN LUIS OBISPO, CA 93401

THE INCLUDED DRAWINGS, SPECIFICATIONS, IDEAS, DESIGNS AND ARRANGEMENTS REPRESENTED THEREBY ARE AND SHALL REMAIN THE PROPERTY OF RRM DESIGN GROUP AND NO PART THEREOF SHALL BE COPIED, DISCLOSED TO OTHERS OR USED IN CONNECTION WITH ANY WORK OR PROJECT OTHER THAN THE SPECIFIED PROJECT FOR WHICH THEY HAVE BEEN PREPARED AND DEVELOPED WITHOUT THE WRITTEN CONSENT OF RRM DESIGN GROUP. VISUAL CONTACT WITH THESE DRAWINGS OR SPECIFICATIONS SHALL CONSTITUTE CONCLUSIVE EVIDENCE OF ACCEPTANCE OF THESE RESTRICTIONS. SUBMITTAL OF PRELIMINARY DRAWINGS FOR REVIEW SHALL NOT BE CONSIDERED A WAIVER OF RRM DESIGN GROUP'S RIGHTS.
RRM DESIGN GROUP COPYRIGHT 2022
RRM IS A CALIFORNIA CORPORATION

CONSULTANT

AGENCY

FOURTH ST COMMUNITY CENTER AND PARK
HENDERSON AVE., PORTERVILLE, CA 93257

WALL SECTIONS

NO.	REVISION	DATE

PROJECT MANAGER
TSL
DRAWN BY MC, NA, PM
CHECKED BY DD, KF
DATE
2024.09.17
PROJECT NUMBER
2883-01-RC22
SHEET
A413

PLAN CHECK REVISION 2

9/20/2024 11:03:26 AM
Autodesk Docs://2883-01_Porterville Fourth St Community Center/2883-01-RC22_Porterville_v22.rvt

KEYNOTES

05 1200.B	FABRICATED METAL CANOPY. REFER TO STRUCTURAL DRAWINGS
06 1000.O	LAMINATED VENEER LUMBER PER STRUCTURAL.

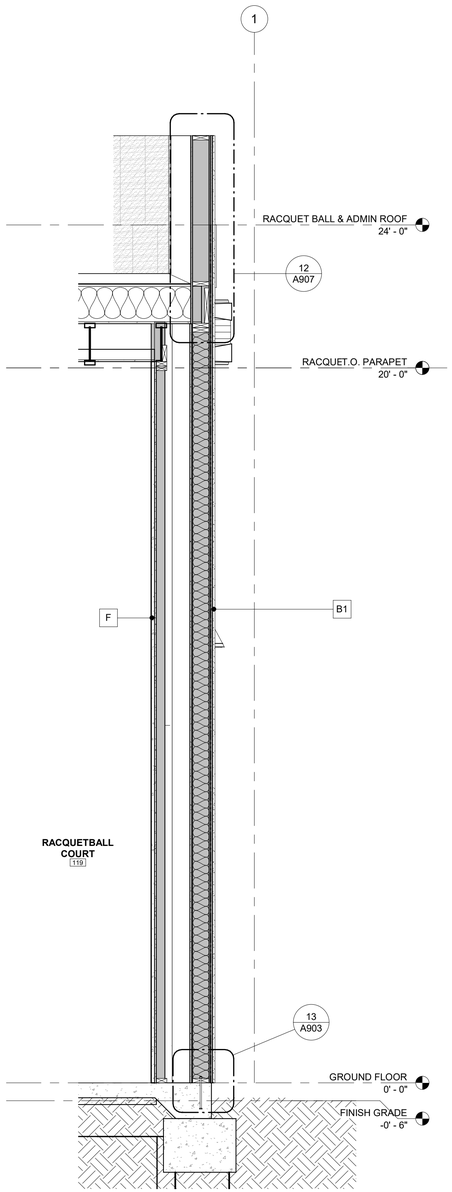

15 WALL SECTION 15
A302 A414 SCALE: 1/2" = 1'-0"

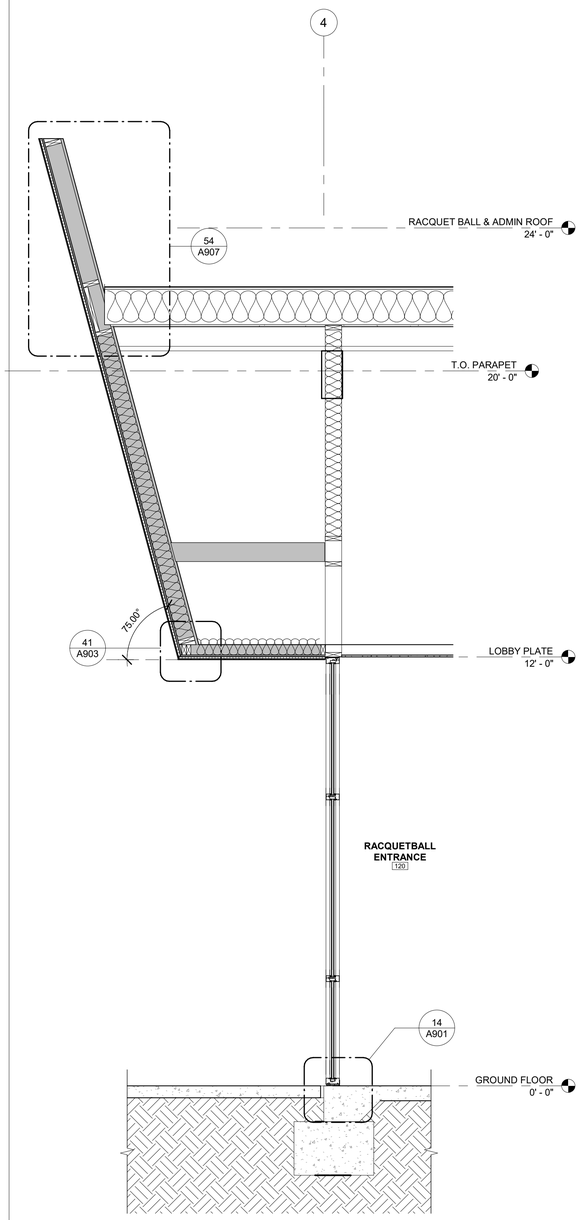

14 WALL SECTION 14
A302 A414 SCALE: 1/2" = 1'-0"

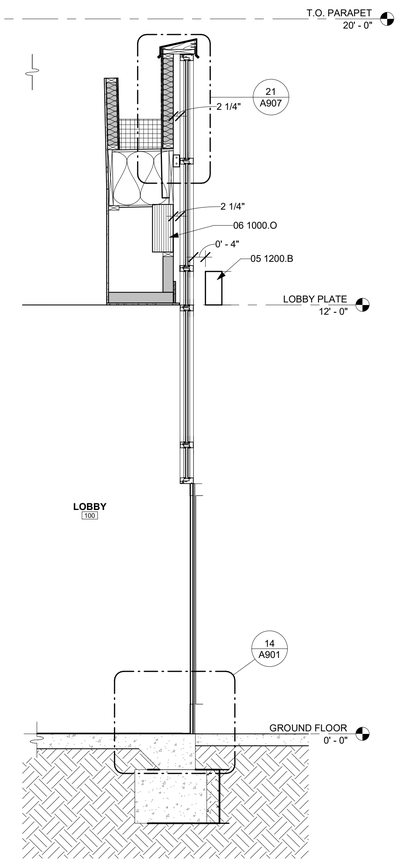

13 WALL SECTION 13
A302 A414 SCALE: 1/2" = 1'-0"

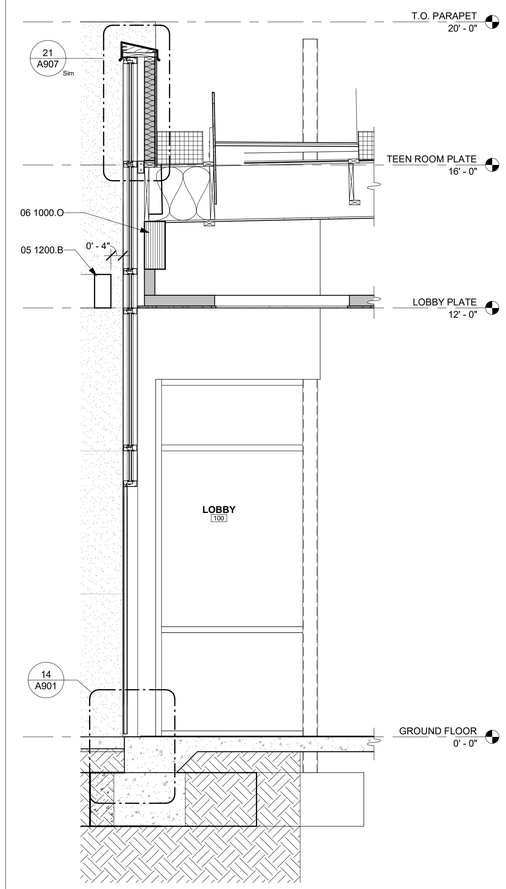

12 WALL SECTION 12
A302 A414 SCALE: 1/2" = 1'-0"

rrm design group
rrmdesign.com | (805) 543-1794
3765 SOUTH HIGUERA STREET, SUITE 102
SAN LUIS OBISPO, CA 93401

THE INCLUDED DRAWINGS, SPECIFICATIONS, IDEAS, DESIGNS AND ARRANGEMENTS REPRESENTED THEREBY ARE AND SHALL REMAIN THE PROPERTY OF RRM DESIGN GROUP AND NO PART THEREOF SHALL BE COPIED, DISCLOSED TO OTHERS OR USED IN CONNECTION WITH ANY WORK OR PROJECT OTHER THAN THE SPECIFIED PROJECT FOR WHICH THEY HAVE BEEN PREPARED AND DEVELOPED WITHOUT THE WRITTEN CONSENT OF RRM DESIGN GROUP. VISUAL CONTACT WITH THESE DRAWINGS OR SPECIFICATIONS SHALL CONSTITUTE CONCLUSIVE EVIDENCE OF ACCEPTANCE OF THESE RESTRICTIONS. SUBMITTAL OF THESE DOCUMENTS FOR PUBLIC AGENCY REVIEW SHALL NOT BE CONSIDERED A WAIVER OF RRM DESIGN GROUP'S RIGHTS.
RRM DESIGN GROUP COPYRIGHT 2022
RRM IS A CALIFORNIA CORPORATION

LICENSED ARCHITECT
MADELIE SCOTT LUPTON
C39678
10-31-25
RENEWAL DATE
STATE OF CALIFORNIA

CONSULTANT

AGENCY

FOURTH ST COMMUNITY CENTER AND PARK
HENDERSON AVE., PORTERVILLE, CA 93257

WALL SECTIONS

NO.	REVISION	DATE
△		
△		
△		
△		
△		
△		

PROJECT MANAGER
TSL

DRAWN BY
MC, NA, PM

CHECKED BY
DD, KF

DATE
2024.09.17

PROJECT NUMBER
2883-01-RC22

SHEET
A414

PLAN CHECK REVISION 2

9/20/2024 11:03:28 AM
Autodesk Docs://2883-01_Porterville Fourth St Community Center/2883-01-RC22_Porterville_v22.rvt

1 FINISH PLAN

A201 | A501 SCALE: 3/32" = 1'-0"

FINISH PLAN GENERAL NOTES

1. REFER TO GENERAL NOTES SHEET G-101 FOR ADDITIONAL REQUIREMENTS.
2. REFER TO ELECTRICAL PLANS FOR FURTHER INFORMATION.
3. REFER TO PLUMBING PLANS FOR FURTHER INFORMATION.
4. REFER TO DETAILS FOR FLOOR/CEILING ASSEMBLIES AND INTERIOR FINISH DETAILS.
5. ALL HARD SURFACE FLOORING SHALL BE SLIP RESISTANT AND MEET THE ***ANSI A326.3*** STANDARD FOR MEASURING THE DYNAMIC COEFFICIENT OF FRICTION (DCOF).
6. ALL FLOORING MATERIALS SHALL COMPLY WITH ***2022 CBC SEC. 804.1.***
7. ALL WALL AND CEILING FINISHES SHALL COMPLY WITH ***2022 CBC TABLE 803.13*** FOR MAXIMUM FLAME SPREAD AND SMOKE DENSITY.

FINISH REQUIREMENTS

PER ***2022 CBC 803.13*** INTERIOR WALL AND CEILING FINISH SHALL HAVE A FLAME SPREAD INDEX NOT GREATER THAN THAT SPECIFIED IN TABLE 803.13 FOR THE GROUP AND LOCATION DESIGNATED. REFER TO ***2022 CBC SEC. 803*** FOR ADDITIONAL INFORMATION.

INTERIOR WALL AND CEILING FINISH REQUIREMENTS BY OCCUPANCY
(CBC 2022 TABLE 803.13)

DEGREE OF FIRE PROTECTION: SPRINKLERED

GROUP	INTERIOR EXIT STAIRWAYS AND RAMPS AND EXIT PASSAGEWAYS	CORRIDORS AND ENCLOSURE FOR EXIT ACCESS STAIRWAYS AND RAMPS	ROOMS AND ENCLOSED SPACES
A-1 & A-2	B	B	C
A-3,A-4,A-5	B	B	C
B,E,M,R-1	B	C	C
R-2	C	C	C
R-2.1	B	C	C
R-2.2	C	C	C
R-3, R-3.1	C	C	C
S	C	C	C

CLASSIFICATIONS

CLASS A:
- FLAME SPREAD INDEX = 0-25
- SMOKE DEVELOPED INDEX = 0-450

CLASS B:
- FLAME SPREAD INDEX = 26-75
- SMOKE DEVELOPED INDEX = 0-450

CLASS C:
- FLAME SPREAD INDEX = 76-200
- SMOKE DEVELOPED INDEX = 0-450

ROOM FINISH SCHEDULE

INTERIOR FINISH SCHEDULE

Number	SPEC	Description	Location	Size	Color	Notes
BASE						
B1	09 6513.A	VINYL BASE	TEEN STUDY, TEEN GAME, OFFICES, LOBBY, MECHANICAL, ELECTRICAL ROOM, STORAGE	6" HIGH	BLACK MATTE	
B2	09 3000.B	CERAMIC TILE COVE BASE	RESTROOMS	3/8" HIGH	ARCTIC SEMI-GLOSS	BASIS OF DESIGN: DALTILE
B3	09 6466.E	WOOD BASE	GYM FLOOR	3" WIDE, 4" HIGH	BLACK MATTE	L-SHAPE PER MANUFACTURER
FLOORING						
F1	03 3000.J	POLISHED CONCRETE	RESTROOMS, LOBBY, RACQUETBALL ENTRY			
F2	03 3000	CONCRETE	SEE PLANS			
F4	09 6466.C	WOOD FLOORING	GYM		MAPLE	
F5	13 2830	WOOD FLOORING	RACQUETBALL COURT		MAPLE	
F6	09 6519.A	LUXURY VINYL TILE	TEEN GAME ROOM, TEEN STUDY ROOM	25CM X 1M	GRAY	BASIS OF DESIGN: INTERFACE // SHANTUNG LVT, SILK COMPLEX, COLORI A02710 SILVER TREE
F7	09 6800	CARPET TILE	OFFICES	25CM X 1M	DARK GREY, ORANGE HIGHLIGHTS	BASIS OF DESIGN: INTERFACE // UPLOAD, STREAMING COLLECTION, COLOR 106292 LIGHT COPPER
F8	09 6800	CARPET TILE	TEEN GAME ROOM, TEEN STUDY ROOM	25CM X 1M	DARK GREY, GREEN HIGHLIGHTS	BASIS OF DESIGN: INTERFACE // UPLOAD, STREAMING COLLECTION, COLOR 106291 LIGHT GREEN
WALLS						
W1	09 3000.A	RESTROOM TILE	RESTROOMS	4" X 12"	ARCTIC SEMI-GLOSS	BASIS OF DESIGN: DALTILE
W2	09 3000.A	RESTROOM TILE	RESTROOMS	4" X 12"	ARTIC WHITE, DESERT GREY, MATTE CHALKBOARD	BASIS OF DESIGN: DALTILE // BLEND: 50% ARCTIC WHITE SEMI-GLOSS. 25% DESERT GRAY SEMI-GLOSS. 25% MATTE CHALKBOARD, VARIED BLEND, AT CONTRACTOR'S DISCRETION.
W3	09 2116.A	GYPSUM WALL BOARD, PAINT TO FINISH	LOBBY, GYM, STORAGE, MECHANICAL, ELECTRICAL, OFFICE, TEEN GAME ROOM, TEEN STUDY	N/A		IMPACT RESISTANT GYP UP TO 8' AT ALL LOCATIONS EXCEPT OFFICE AND RESTROOMS
W4	09 3000.G	WATER RESISTANT GYPSUM WALL BOARD	RESTROOMS	N/A		
W5	13 0032.C	T&G PANEL	RAQUETBALL COURT	N/A	N/A, PREFINISHED	
W6	06 8213.A	FRP	JANITOR	4' X 8'	WHITE	

SIGNAGE LEGEND

- ? — SIGNAGE TAG. REFER TO ACCESSIBILITY DETAILS FOR ADDITIONAL INFORMATION.
- A — **ILLUMINATED EXIT** - "EXIT" SIGN TO BE INSTALLED PER 2022 CBC.
- B — **DIRECTIONAL SIGN** - INDICATING STAIR ACCESS AND ELEVATOR DIRECTION. SIGN TO BE INSTALLED PER 2022 CBC. REFER TO DETAIL **13/A-941**
- C — **DOOR ACCESS** - "THIS DOOR TO REMAIN UNLOCKED DURING BUSINESS HOURS" SHALL BE PLACED ON OR ADJACENT TO THE FRONT EXIT DOORS. THE SIGN SHALL BE IN LETTERS NOT LESS THAN ONE INCH HIGH ON A CONTRASTING BACKGROUND.
- D — **OCCUPANT LOAD** - ROOM OCCUPANCY LOAD SHALL BE POSTED IN A CONSPICUOUS PLACE NEAR THE MAIN EXIT FROM THE ROOM(S). POSTING SHALL BE BY MEANS OF AN APPROVED DURABLE SIGN HAVING A CONTRASTING COLOR FROM THE BACKGROUND TO WHICH IT IS ATTACHED.
- E — **SERVICE ROOM NAME SIGN** - SIGN SHALL BE POSTED ON THE OUTSIDE OF THE DOOR SO IT IS VISIBLE AND IN CONTRASTING COLOR, (I.E. "*FIRE RISER*", "*ELECTRICAL*", *STORAGE*")
- F — **RESTROOM SIGN** - SIGN TO BE INSTALLED PER 2022 CBC. REFER TO ACCESSIBILITY DETAIL 13/A-944
- G — **ROOM NUMBER** - SIGN TO BE INSTALLED PER 2022 CBC. REFER TO DETAIL **14/A-941**
- H — **ROOM NAME** - SIGN TO BE INSTALLED PER 2022 CBC. REFER TO DETAIL **14/A900.**
- K — **TACTILE EXIT** - SIGN TO BE PROVIDED AT GRADE-LEVEL EXTERIOR EXIT SIGNS IN CASES WHERE THE EXIT OR PATH OF EGRESS TRAVEL IS NOT IMMEDIATELY VISIBLE: "EXIT", "EXIT STAIR DOWN", "EXIT ROUTE" OR "TO EXIT" WHERE APPLIES, COMPLIANT WITH 2019 CBC 1013.4

LEGEND

- F1 — POLISHED CONCRETE FINISH
- F2 — SEALED CONCRETE FINISH
- F4 — RESILIENT ATHLETIC FLOORING, MAPLE
- F5 — HARDWOOD FLOORING, MAPLE
- F6 — LUXURY VINYL TILE 09 6519
- F7 — CARPET TILE 09 6800
- W1 — BATHROOM WALL TILE, DALTILE ARCTIC WHITE SEMI-GLOSS 8" X 4"
- W2 — BATHROOM WALL TILE // DALTILE: 50% ARCTIC WHITE SEMI-GLOSS, 25% DESERT GRAY SEMI-GLOSS, 25% MATTE CHALKBOARD, VARIED BLEND, AT CONTRACTOR'S DISCRETION.

rrm design group
rrmdesign.com | (805) 543-1794
3765 SOUTH HIGUERA STREET SUITE 102
SAN LUIS OBISPO, CA 93401

THE INCLUDED DRAWINGS, SPECIFICATIONS, IDEAS, DESIGNS AND ARRANGEMENTS REPRESENTED THEREBY ARE AND SHALL REMAIN THE PROPERTY OF RRM DESIGN GROUP AND NO PART THEREOF SHALL BE COPIED, DISCLOSED TO OTHERS OR SUBSTANTIALLY USED FOR ANY PURPOSE WITHOUT THE WRITTEN CONSENT OF RRM DESIGN GROUP. THE PROJECT FOR WHICH THEY HAVE BEEN PREPARED AND DEVELOPED WITHOUT THE WRITTEN CONSENT OF RRM DESIGN GROUP. VISUAL CONTACT WITH THESE DRAWINGS OR SPECIFICATIONS SHALL CONSTITUTE CONCLUSIVE EVIDENCE OF ACCEPTANCE OF THESE RESTRICTIONS. SUBMITTAL OF THESE DRAWINGS FOR REVIEW SHALL NOT BE CONSIDERED A WAIVER OF RRM DESIGN GROUP'S RIGHTS.
RRM DESIGN GROUP COPYRIGHT 2022
RRM IS A CALIFORNIA CORPORATION

LICENSED ARCHITECT — MICHELLE SCOTT LUCAS — C39678 — 10-31-25 RENEWAL DATE — STATE OF CALIFORNIA

CONSULTANT

AGENCY

FOURTH ST COMMUNITY CENTER AND PARK
HENDERSON AVE., PORTERVILLE, CA 93257

FINISH PLANS

NO.	REVISION	DATE
1	PLAN CHECK REVISION 1	05/17/24

PROJECT MANAGER TSL
DRAWN BY MC, NA, PM
CHECKED BY DD, KF
DATE 2024.09.17
PROJECT NUMBER 2883-01-RC22
SHEET A501

PLAN CHECK REVISION 2

9/20/2024 11:03:30 AM
Autodesk Docs://2883-01_Portervillle Fourth St Community Center/2883-01-RC22_Porterville_v22.rvt

INTERIOR WOMENS RESTROOM

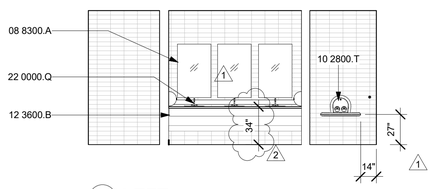

1W LEFT
SCALE: 3/16" = 1'-0"

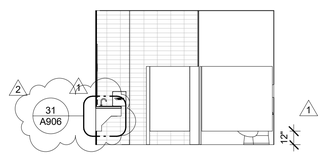

1N NORTH
SCALE: 3/16" = 1'-0"

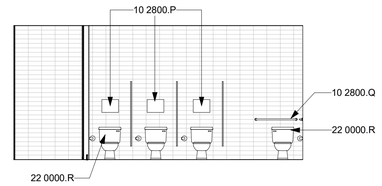

1E RIGHT
SCALE: 3/16" = 1'-0"

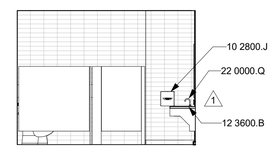

1S SOUTH
SCALE: 3/16" = 1'-0"

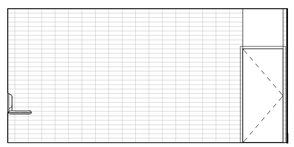

2N HALLWAY NORTH
SCALE: 3/16" = 1'-0"

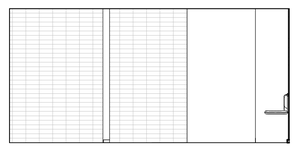

2S HALLWAY SOUTH
SCALE: 3/16" = 1'-0"

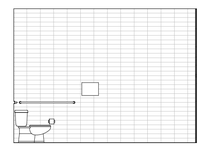

3S SOUTH B
SCALE: 3/16" = 1'-0"

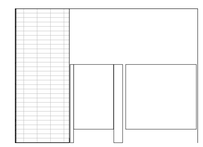

3N NORTH B
SCALE: 3/16" = 1'-0"

INTERIOR MENS RESTROOM

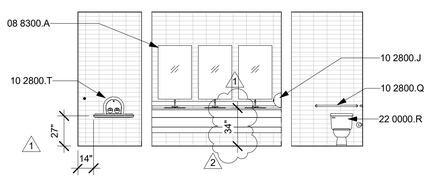

4W LEFT
SCALE: 3/16" = 1'-0"

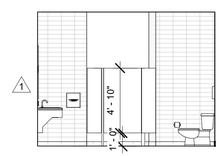

4N NORTH
SCALE: 3/16" = 1'-0"

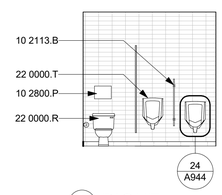

4E RIGHT
SCALE: 3/16" = 1'-0"

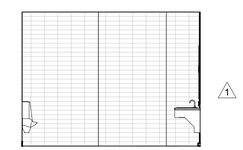

4S SOUTH
SCALE: 3/16" = 1'-0"

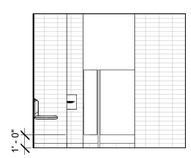

5N HALLWAY NORTH
SCALE: 3/16" = 1'-0"

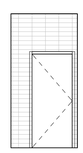

5E HALLWAY RIGHT
SCALE: 3/16" = 1'-0"

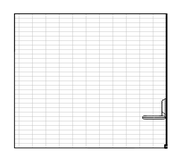

5S HALLWAY SOUTH
SCALE: 3/16" = 1'-0"

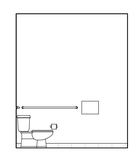

6N NORTH B
SCALE: 3/16" = 1'-0"

6E EAST B
SCALE: 3/16" = 1'-0"

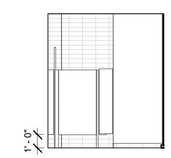

6S SOUTH B
SCALE: 3/16" = 1'-0"

EXTERIOR WOMENS RESTROOM

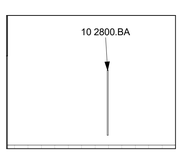

7W LEFT
SCALE: 3/16" = 1'-0"

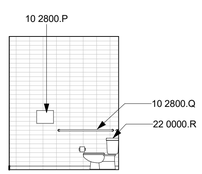

7N NORTH
SCALE: 3/16" = 1'-0"

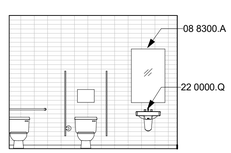

7E RIGHT
SCALE: 3/16" = 1'-0"

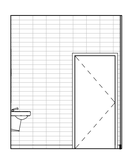

7S SOUTH
SCALE: 3/16" = 1'-0"

EXTERIOR MENS RESTROOM

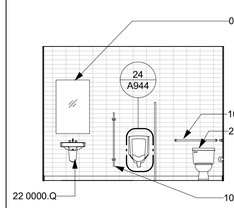

8W LEFT
SCALE: 3/16" = 1'-0"

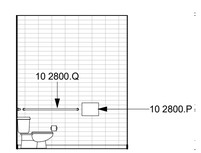

8N NORTH
SCALE: 3/16" = 1'-0"

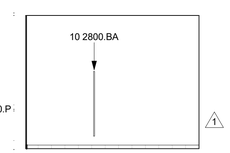

8E RIGHT
SCALE: 3/16" = 1'-0"

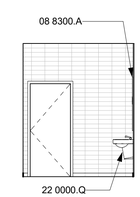

8S SOUTH
SCALE: 3/16" = 1'-0"

INT. ELEVS. GENERAL NOTES

1. REFER TO GENERAL NOTES SHEET G-101 FOR ADDITIONAL REQUIREMENTS.
2. REFER TO ELECTRICAL PLANS FOR FURTHER INFORMATION ON ELECTRICAL EQUIPMENT.
3. REFER TO RCP'S FOR SOFFIT DIMENSIONS AND FURTHER INFORMATION.
4. PROVIDE BLOCKING FOR ALL WALLS WHERE WALL HUNG EQUIPMENT AND FIXTURES OCCUR.
5. ALL DIMENSIONS SHOWN IN A ROOM TO BE CONSIDERED TYPICAL FOR EACH ELEVATION OF THE ROOM, UNLESS NOTED OTHERWISE.
6. VERIFY MOUNTING HEIGHTS OF ACCESSORIES AND PLUMBING FIXTURES MEET ACCESSIBILITY REQUIREMENTS WHERE APPLICABLE.
7. ALL WALL AND CEILING FINISHES SHALL COMPLY WITH ***2022 CBC TABLE 803.13*** FOR MAXIMUM FLAME SPREAD AND SMOKE DENSITY.

KEYNOTES

08 8300.A	WALL-MOUNTED MIRROR.
10 2113.B	URINAL SCREEN
10 2800.BA	TOILET PARTITION
10 2800.J	SURFACE MOUNTED ELECTRIC HAND DRYER
10 2800.P	SEAT COVER DISPENSER. SEE DETAIL 11/A-944 FOR MOUNTING HEIGHT 1
10 2800.Q	GRAB BAR. REFER TO DETAIL 14/A944
10 2800.T	DIAPER CHANGING STATION REFER TO 32 AND 34 ON A941
12 3600.B	SOLID SURFACE COUNTERTOP
22 0000.Q	SINK OR LAVATORY.REFER TO PLUMBING.
22 0000.R	TOILET. REFER TO PLUMBING.
22 0000.T	URINAL. REFER TO PLUMBING.

LEGEND

F1
POLISHED CONCRETE FINISH

F2
SEALED CONCRETE FINISH

F4
RESILIENT ATHLETIC FLOORING, MAPLE

F5
HARDWOOD FLOORING, MAPLE

F6
LUXURY VINYL TILE
09 6519

F7
CARPET TILE
09 6800

W1
BATHROOM WALL TILE, DALTILE ARCTIC WHITE SEMI-GLOSS 8" X 4"

W2
BATHROOM WALL TILE // DALTILE: 50% ARCTIC WHITE SEMI-GLOSS, 25% DESERT GRAY SEMI-GLOSS, 25% MATTE CHALKBOARD, VARIED BLEND, AT CONTRACTOR'S DISCRETION.

rrm design group
rrmdesign.com | (805) 543-1794
3765 SOUTH HIGUERA STREET SUITE 102
SAN LUIS OBISPO, CA 93401

THE INCLUDED DRAWINGS, SPECIFICATIONS, IDEAS, DESIGNS AND ARRANGEMENTS REPRESENTED THEREBY ARE AND SHALL REMAIN THE PROPERTY OF RRM DESIGN GROUP AND NO PART THEREOF SHALL BE COPIED, DISCLOSED TO OTHERS OR SUBSTANTIALLY USED FOR ANY PURPOSE WITHOUT THE PROMPT WRITTEN CONSENT OF THE PROJECT FOR WHICH THEY HAVE BEEN PREPARED AND DEVELOPED WITHOUT THE WRITTEN CONSENT OF RRM DESIGN GROUP. VISUAL CONTACT WITH THESE DRAWINGS OR SPECIFICATIONS SHALL CONSTITUTE CONCLUSIVE EVIDENCE OF ACCEPTANCE OF THESE RESTRICTIONS. SUBMITTAL OF PRELIMINARY DRAWINGS FOR REVIEW SHALL NOT BE DEEMED AS A WAIVER OF RRM DESIGN GROUP'S RIGHTS.
RRM DESIGN GROUP COPYRIGHT 2022
RRM IS A CALIFORNIA CORPORATION

LICENSED ARCHITECT
MICHELLE SCOTT LUCAS
C39678
10-31-25
RENEWAL DATE
STATE OF CALIFORNIA

CONSULTANT

AGENCY

FOURTH ST COMMUNITY CENTER AND PARK
HENDERSON AVE., PORTERVILLE, CA 93257

INTERIOR ELEVATIONS

NO.	REVISION	DATE
1	PLAN CHECK REVISION 1	05/17/24
2	PLAN CHECK REVISION 2	09/17/24

PROJECT MANAGER
TSL
DRAWN BY MC, NA, PM
CHECKED BY DD, KF
DATE
2024.09.17
PROJECT NUMBER
2883-01-RC22
SHEET
A511

PLAN CHECK REVISION 2

9/20/2024 11:03:35 AM
Autodesk Docs://2883-01_Porterville Fourth St Community Center/2883-01-RC22_Porterville_v22.rvt

TEEN STUDY ROOM

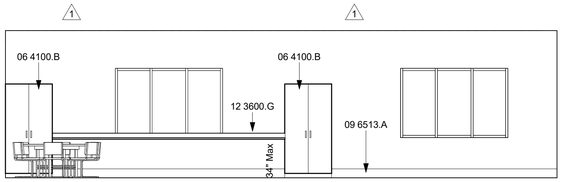

8E TEEN STUDY ROOM RIGHT
SCALE: 3/16" = 1'-0"

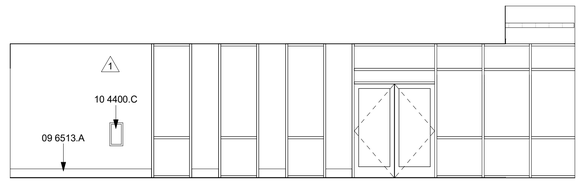

8W TEEN STUDY ROOM LEFT
SCALE: 3/16" = 1'-0"

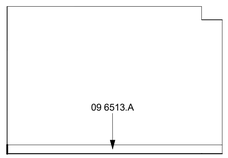

8S TEEN STUDY ROOM SOUTH
SCALE: 3/16" = 1'-0"

OPEN OFFICE ROOM

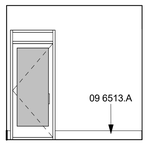

9W LEFT
SCALE: 3/16" = 1'-0"

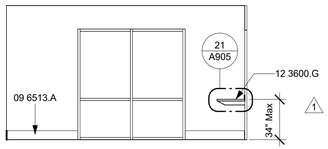

9N NORTH
SCALE: 3/16" = 1'-0"

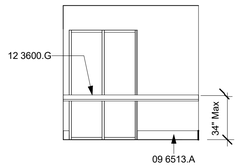

9E RIGHT
SCALE: 3/16" = 1'-0"

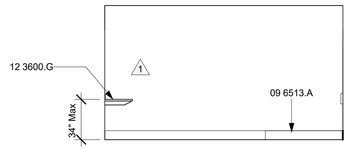

9S SOUTH
SCALE: 3/16" = 1'-0"

MANAGERS OFFICE

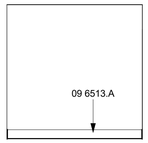

6W LEFT
SCALE: 3/16" = 1'-0"

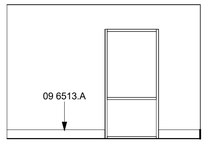

6N NORTH
SCALE: 3/16" = 1'-0"

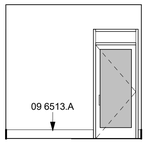

6E RIGHT
SCALE: 3/16" = 1'-0"

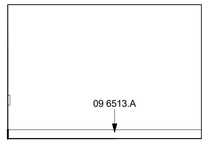

6S SOUTH
SCALE: 3/16" = 1'-0"

KITCHENETTE

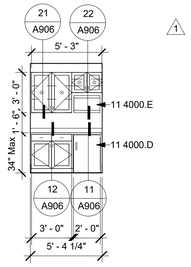

10 OFFICE - KITCHENETTE
SCALE: 3/16" = 1'-0"

OFFICE

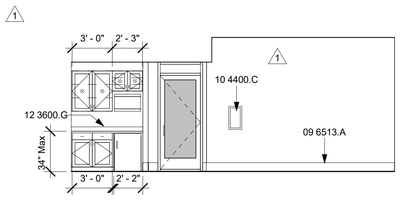

7E RIGHT
SCALE: 3/16" = 1'-0"

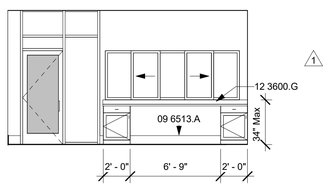

7S SOUTH
SCALE: 3/16" = 1'-0"

***34" max height on counters/sinks is measured from finished floor to the top of the highest point inclusive of lips created by sinks, counter edges, windows, etc.**

INT. ELEVS. GENERAL NOTES

1. REFER TO GENERAL NOTES SHEET G-101 FOR ADDITIONAL REQUIREMENTS.
2. REFER TO ELECTRICAL PLANS FOR FURTHER INFORMATION ON ELECTRICAL EQUIPMENT.
3. REFER TO RCP'S FOR SOFFIT DIMENSIONS AND FURTHER INFORMATION.
4. PROVIDE BLOCKING FOR ALL WALLS WHERE WALL HUNG EQUIPMENT AND FIXTURES OCCUR.
5. ALL DIMENSIONS SHOWN IN A ROOM TO BE CONSIDERED TYPICAL FOR EACH ELEVATION OF THE ROOM, UNLESS NOTED OTHERWISE.
6. VERIFY MOUNTING HEIGHTS OF ACCESSORIES AND PLUMBING FIXTURES MEET ACCESSIBILITY REQUIREMENTS WHERE APPLICABLE.
7. ALL WALL AND CEILING FINISHES SHALL COMPLY WITH ***2022 CBC TABLE 803.13*** FOR MAXIMUM FLAME SPREAD AND SMOKE DENSITY.

KEYNOTES

06 4100.B	FULL HT. CAB/W ADJ. SHELVING AND LOCKING DOORS.
09 6513.A	VINYL BASE.
10 4400.C	RECESSED FIRE EXTINGUISHER CABINET WITH EXTINGUISHER, 2A:10B:C RATING PER DETAIL 41/A-941
11 4000.D	UNDERCOUNTER REFRIGERATOR.
11 4000.E	MICROWAVE OVEN.
12 3600.G	PLASTIC LAMINATE WORKSURFACE W/METAL SUPPORT BRACKETS. REFER TO DETAIL 21/A905

LEGEND

F1	POLISHED CONCRETE FINISH
F2	SEALED CONCRETE FINISH
F4	RESILIENT ATHLETIC FLOORING, MAPLE
F5	HARDWOOD FLOORING, MAPLE
F6	LUXURY VINYL TILE 09 6519
F7	CARPET TILE 09 6800
W1	BATHROOM WALL TILE, DALTILE ARCTIC WHITE SEMI-GLOSS 8" X 4"
W2	BATHROOM WALL TILE // DALTILE: 50% ARCTIC WHITE SEMI-GLOSS, 25% DESERT GRAY SEMI-GLOSS, 25% MATTE CHALKBOARD, VARIED BLEND, AT CONTRACTOR'S DISCRETION.

rrm design group
rrmdesign.com | (805) 543-1794
3765 SOUTH HIGUERA STREET SUITE 102
SAN LUIS OBISPO, CA 93401

THE INCLUDED DRAWINGS, SPECIFICATIONS, IDEAS, DESIGNS AND ARRANGEMENTS REPRESENTED THEREBY ARE AND SHALL REMAIN THE PROPERTY OF RRM DESIGN GROUP AND NO PART THEREOF SHALL BE COPIED, DISCLOSED TO OTHERS OR USED IN CONNECTION WITH ANY WORK OR PROJECT OTHER THAN THE SPECIFIED PROJECT FOR WHICH THEY HAVE BEEN PREPARED AND DEVELOPED WITHOUT THE WRITTEN CONSENT OF RRM DESIGN GROUP. VISUAL CONTACT WITH THESE DRAWINGS OR SPECIFICATIONS SHALL CONSTITUTE CONCLUSIVE EVIDENCE OF ACCEPTANCE OF THESE RESTRICTIONS. SUBMITTAL OF PRELIMINARY DRAWINGS FOR REVIEW SHALL NOT BE CONSIDERED A WAIVER OF RRM DESIGN GROUP'S RIGHTS.
RRM DESIGN GROUP COPYRIGHT 2022
RRM IS A CALIFORNIA CORPORATION

LICENSED ARCHITECT
MICHELLE SCOTT LUCAS
C39678
10-31-25
RENEWAL DATE
STATE OF CALIFORNIA

CONSULTANT

AGENCY

FOURTH ST COMMUNITY CENTER AND PARK
HENDERSON AVE., PORTERVILLE, CA 93257

INTERIOR ELEVATIONS

NO.	REVISION	DATE
1	PLAN CHECK REVISION 1	05/17/24

PROJECT MANAGER
TSL
DRAWN BY MC, NA, PM
CHECKED BY DD, KF
DATE
2024.09.17
PROJECT NUMBER
2883-01-RC22
SHEET
A512

PLAN CHECK REVISION 2

9/20/2024 11:03:38 AM
Autodesk Docs://2883-01_Porterville Fourth St Community Center/2883-01-RC22_Porterville_v22.rvt

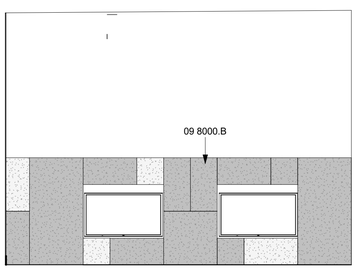

11 W TEEN GAME ROOM LEFT
SCALE: 3/16" = 1'-0"

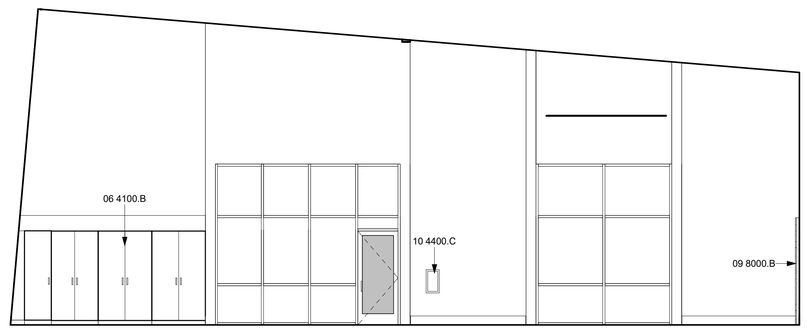

11 S TEEN GAME ROOM SOUTH ELEVATION
SCALE: 3/16" = 1'-0"

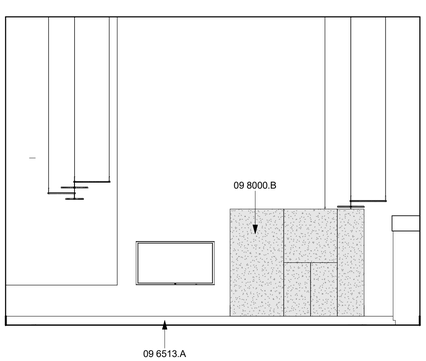

11 E TEEN GAME ROOM RIGHT
SCALE: 3/16" = 1'-0"

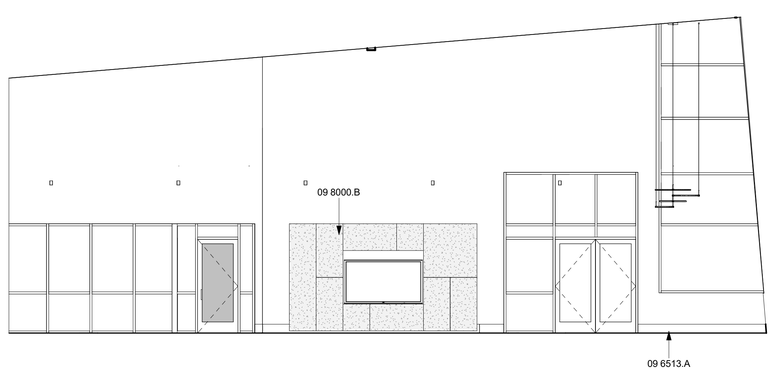

11 N TEEN GAME ROOM NORTH
SCALE: 3/16" = 1'-0"

INT. ELEVS. GENERAL NOTES

1. REFER TO GENERAL NOTES SHEET G-101 FOR ADDITIONAL REQUIREMENTS.
2. REFER TO ELECTRICAL PLANS FOR FURTHER INFORMATION ON ELECTRICAL EQUIPMENT.
3. REFER TO RCP'S FOR SOFFIT DIMENSIONS AND FURTHER INFORMATION.
4. PROVIDE BLOCKING FOR ALL WALLS WHERE WALL HUNG EQUIPMENT AND FIXTURES OCCUR.
5. ALL DIMENSIONS SHOWN IN A ROOM TO BE CONSIDERED TYPICAL FOR EACH ELEVATION OF THE ROOM, UNLESS NOTED OTHERWISE.
6. VERIFY MOUNTING HEIGHTS OF ACCESSORIES AND PLUMBING FIXTURES MEET ACCESSIBILITY REQUIREMENTS WHERE APPLICABLE.
7. ALL WALL AND CEILING FINISHES SHALL COMPLY WITH ***2022 CBC TABLE 803.13*** FOR MAXIMUM FLAME SPREAD AND SMOKE DENSITY.

KEYNOTES

06 4100.B	FULL HT. CAB/W ADJ. SHELVING AND LOCKING DOORS.
09 6513.A	VINYL BASE.
09 8000.B	ACOUSTIC WALL PANEL
10 4400.C	RECESSED FIRE EXTINGUISHER CABINET WITH EXTINGUISHER, 2A:10B:C RATING PER DETAIL 41/A-941

LEGEND

F1
POLISHED CONCRETE FINISH

F2
SEALED CONCRETE FINISH

F4
RESILIENT ATHLETIC FLOORING, MAPLE

F5
HARDWOOD FLOORING, MAPLE

F6
LUXURY VINYL TILE
09 6519

F7
CARPET TILE
09 6800

W1
BATHROOM WALL TILE, DALTILE ARCTIC WHITE SEMI-GLOSS 8" X 4"

W2
BATHROOM WALL TILE // DALTILE: 50% ARCTIC WHITE SEMI-GLOSS, 25% DESERT GRAY SEMI-GLOSS, 25% MATTE CHALKBOARD, VARIED BLEND, AT CONTRACTOR'S DISCRETION.

rrm design group
rrmdesign.com | (805) 543-1794
3765 SOUTH HIGUERA STREET SUITE 102
SAN LUIS OBISPO, CA 93401

THE INCLUDED DRAWINGS, SPECIFICATIONS, IDEAS, DESIGNS AND ARRANGEMENTS REPRESENTED THEREBY ARE AND SHALL REMAIN THE PROPERTY OF RRM DESIGN GROUP AND NO PART THEREOF SHALL BE COPIED, DISCLOSED TO OTHERS OR USED IN CONNECTION WITH ANY WORK OR PROJECT OTHER THAN THE SPECIFIC PROJECT FOR WHICH THEY HAVE BEEN PREPARED AND DEVELOPED WITHOUT THE WRITTEN CONSENT OF RRM DESIGN GROUP. VISUAL CONTACT WITH THESE DRAWINGS OR SPECIFICATIONS SHALL CONSTITUTE CONCLUSIVE EVIDENCE OF ACCEPTANCE OF THESE RESTRICTIONS. SUBMITTAL OF SUBSTITUTION PROPOSALS SHALL IMPLY THAT SUCH DATA WILL BE CONSIDERED AS A WAIVER OF RRM DESIGN GROUP'S RIGHTS.
RRM DESIGN GROUP COPYRIGHT 2022
RRM IS A CALIFORNIA CORPORATION

CONSULTANT

AGENCY

FOURTH ST COMMUNITY CENTER AND PARK
HENDERSON AVE., PORTERVILLE, CA 93257

INTERIOR ELEVATIONS

NO.	REVISION	DATE
1	PLAN CHECK REVISION 1	05/17/24

PROJECT MANAGER
TSL
DRAWN BY MC, NA, PM
CHECKED BY DD, KF
DATE
2024.09.17
PROJECT NUMBER
2883-01-RC22
SHEET 1
A513

PLAN CHECK REVISION 2

9/20/2024 11:03:41 AM
Autodesk Docs://2883-01_Porterville Fourth St Community Center/2883-01-RC22_Porterville_v22.rvt

DOOR TYPES LEGEND

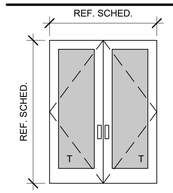

A.
DOUBLE ALUMINUM STOREFRONT

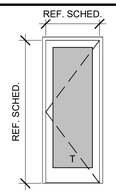

B.
SINGLE ALUMINUM STOREFRONT

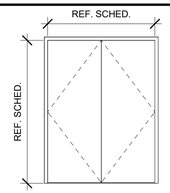

C.
INT. DOUBLE HOLLOW METAL

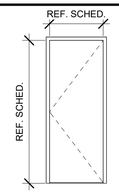

D.
INT. SINGLE HOLLOW METAL

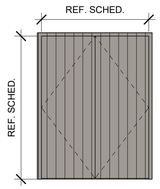

E.
EXT. DOUBLE HOLLOW METAL

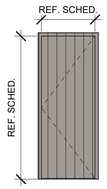

F.
EXT. SINGLE HOLLOW METAL

DOOR SCHEDULE

2

NO.	TYPE	DOOR WIDTH	DOOR HEIGHT	DOOR THICKNESS	DOOR MATERIAL	FRAME	FIRE RATING	DETAIL HEAD	DETAIL JAMB	DETAIL SILL	HARDWARE GROUP	REMARKS
100.1	A	6' - 0"	7' - 0"	0' - 1 3/4"	ALUM	ALUM		51/A901	51/A901	51/A901	01	1,2,9,10
100.3	A	6' - 0"	6' - 11"	0' - 1 3/4"	ALUM	ALUM		51/A901	51/A901	51/A901	02	2,10
101	B	3' - 0"	7' - 0"	0' - 1 3/4"	ALUM	ALUM		51/A901	51/A901	51/A901	03	1,2,9,11
102	B	3' - 0"	7' - 0"	0' - 1 3/4"	ALUM	ALUM		51/A901	51/A901	51/A901	04	11
103	B	3' - 0"	7' - 0"	0' - 1 3/4"	ALUM	ALUM		51/A901	51/A901	51/A901	04	11
104	D	3' - 0"	7' - 0"	0' - 1 3/4"	HM	METAL		31/A901	31/A901	31/A901	05	1,2,10
105	D	2' - 4"	7' - 0"	0' - 1 3/4"	HM	METAL		31/A901	31/A901	31/A901	06	11
106	D	3' - 0"	7' - 0"	0' - 1 3/4"	HM	METAL		31/A901	31/A901	31/A901	07	1,2,10
107	A	6' - 0"	7' - 0"	0' - 1 3/4"	ALUM	ALUM		51/A901	51/A901	51/A901	08	1,2,10
108.1	B	3' - 0"	7' - 0"	0' - 1 3/4"	ALUM	ALUM		51/A901	51/A901	51/A901	09	11
108.2	A	6' - 0"	7' - 0"	0' - 1 3/4"	ALUM	ALUM		51/A901	51/A901	51/A901	02	1,2,10
108.3	B	3' - 0"	7' - 0"	0' - 1 3/4"	ALUM	ALUM		51/A901	51/A901	51/A901	10	1,2,10
109	B	3' - 0"	7' - 0"	0' - 1 3/4"	ALUM	ALUM		51/A901	51/A901	51/A901	04	11
110.1	F	3' - 0"	7' - 0"	0' - 1 3/4"	HM	METAL	45 MIN.	31/A901	31/A901	34/A901	11	4,11
110.7	E	6' - 0"	7' - 0"	0' - 1 3/4"	HM	METAL		34/A901	34/A901	34/A901	12	2
111	F	3' - 0"	7' - 0"	0' - 1 3/4"	HM	METAL		31/A901	31/A901	34/A901	13	10
112	F	3' - 0"	7' - 0"	0' - 1 3/4"	HM	METAL		31/A901	31/A901	34/A901	13	10,12
113	F	3' - 0"	7' - 0"	0' - 1 3/4"	HM	METAL		31/A901	31/A901	34/A901	14	11
114.1	C	6' - 0"	7' - 0"	0' - 1 3/4"	HM	METAL	45 MIN.	31/A901	31/A901	31/A901	15	4
114.2	C	6' - 0"	7' - 0"	0' - 1 3/4"	HM	METAL	45 MIN.	31/A901	31/A901	31/A901	15	4
114.3	E	6' - 0"	7' - 0"	0' - 1 3/4"	HM	METAL		34/A901	34/A901	34/A901	16	1,2
114.4	B	3' - 0"	7' - 0"	0' - 1 3/4"	ALUM	ALUM		51/A901	51/A901	51/A901	10	1,2,10
114.5	D	3' - 0"	7' - 0"	0' - 1 3/4"	HM	METAL		31/A901	31/A901	31/A901	17	1,2
115	C	6' - 0"	7' - 0"	0' - 1 3/4"	HM	METAL		31/A901	31/A901	31/A901	18	11
116	D	3' - 0"	7' - 0"	0' - 1 3/4"	HM	METAL		31/A901	31/A901	31/A901	06	11
117	C	6' - 0"	7' - 0"	0' - 1 3/4"	HM	METAL		31/A901	31/A901	31/A901	19	11
119.1	B	3' - 0"	7' - 0"	0' - 1 3/4"	ALUM	ALUM		51/A901	51/A901	51/A901	10	1,2,10
119.2	B	3' - 0"	7' - 0"	0' - 1 3/4"	ALUM	ALUM		51/A901	51/A901	51/A901	20	10

1

DOOR GENERAL NOTES

1. REFER TO GENERAL NOTES ON SHEET G-101 FOR ADDITIONAL REQUIREMENTS
2. REFER TO FLOOR PLANS FOR DOOR LOCATIONS.
3. CONTRACTOR TO VERIFY EXACT ROUGH OPENING SIZES WITH DOOR MANUFACTURER SPECIFICATIONS PRIOR TO FABRICATION OF ROUGH OPENINGS.
4. CONTRACTOR TO VERIFY ACTUAL DOOR SIZES TO FIT FINISH OPENING PRIOR TO FABRICATION OF DOOR AND FINISH OPENING.
5. REFER TO DOOR TYPES LEGEND FOR GLAZING.
6. REFER TO T24 REPORT FOR GLAZING ENERGY REQUIREMENTS
7. INSTALL PER MANUFACTURERS WRITTEN INSTRUCTIONS

DOOR REMARKS

1. EGRESS DOOR.
2. EQUIPPED W/PANIC HARDWARE.
3. INCLUDES SAFETY GLAZING.
4. FIRE-RATED DOOR ASSEMBLY. VISION PANELS OR LITES TO RECEIVE WIRE GLASS.
5. LOUVERED DOOR.
6. KICK-PLATE PROVIDED.
7. HINGE HARDWARE TO BE OFFSET TO ALLOW DOOR TO BE FLUSH WITH MTL PANEL
8. MTL PANEL INTEGRATED ON DOOR TO MATCH MTL PANEL FINISH.
9. CARD READER
10. PUSH-PULL HARDWARE DOOR
11. LEVER HARDWARE DOOR
12. PROVIDE LOUVER (0.25 SQ FT MIN. FREE AREA)

DOOR ABBREVIATIONS

AL	ALUMINUM
FG	FIBERGLASS
HM	HOLLOW METAL
PT	PAINT
REMARKS	
PM	PRIME
M	MASONITE
SS	STAINLESS STEEL
T	TEMPERED
WD	WOOD

WINDOW TYPES LEGEND

2

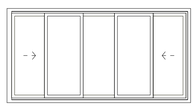

Z.
INTERIOR SERVICE WINDOW

WINDOW SCHEDULE

NO.	TYPE	SIZE WIDTH	SIZE HEIGHT	SILL HEIGHT	Head Height	DETAILS HEAD	DETAILS JAMB	DETAILS SILL	DETAILS HEAD	DETAILS JAMB	DETAILS SILL	
01	A	5' - 0"	18' - 0"	15' - 6"	33' - 6"				53/A901			3
02	B	5' - 0"	18' - 0"	0' - 0"	18' - 0"				53/A901			3
03	C	5' - 0"	15' - 11"	20' - 1"	36' - 0"				53/A901			3
04	D	5' - 0"	12' - 0"	24' - 10"	36' - 10"				53/A901			3
05	E	5' - 0"	26' - 0"	14' - 6"	40' - 6"				53/A901			3
06	F	5' - 0"	26' - 0"	0' - 0"	26' - 0"				53/A901			3
07	G	5' - 0"	26' - 0"	14' - 6"	40' - 6				53/A901			3
08	H	5' - 0"	10' - 10 1/2"	8' - 2"	19' - 0 1/2"				53/A901			3
09	J	5' - 0"	28' - 0"	10' - 6"	38' - 6"				53/A901			3
10	K	5' - 0"	18' - 0"	0' - 0"	18' - 0"							3
27	Z	3' - 0"	3' - 8"	3' - 4"	7' - 0"							
30	L	5' - 0"	12' - 0"	22' - 0"	34' - 0"							3

WINDOW GENERAL NOTES

1. REFER TO GENERAL NOTES ON SHEET GA-101 FOR ADDITIONAL REQUIREMENTS
2. REFER TO FLOOR PLANS FOR WINDOW LOCATIONS.
3. CONTRACTOR TO VERIFY EXACT ROUGH OPENING SIZES WITH WINDOW MANUFACTURER SPECIFICATIONS PRIOR TO FABRICATION OF ROUGH OPENINGS.
4. CONTRACTOR TO VERIFY ACTUAL WINDOW SIZES TO FIT FINISH OPENING PRIOR TO FABRICATION OF WINDOW AND FINISH OPENING.
5. HEAD HEIGHT MEASURED FROM FF UNLESS NOTED OTHERWISE.
6. REFER TO ENERGY COMPLIANCE REPORTS FOR U-FACTOR, SHGC AND ADDITIONAL WINDOW REQUIREMENTS.
7. ALL GLAZING IS DOUBLE PANE UNLESS OTHERWISE NOTED.
8. PROVIDE SHOP DRAWINGS FOR ALL WINDOW UNITS
9. REFER TO WINDOW TYPES LEGEND FOR GLAZING.
10. REFER TO WINDOW SCHEDULE AND WINDOW TYPES LEGEND FOR FURTHER INFORMATION.
11. STOREFRONT SECTIONS ARE 2" AND CURTAINWALL SECTIONS ARE 2-1/2", UNO. REFER TO STOREFRONT TYPES LEGEND FOR FURTHER INFORMATION.
12. WINDOWS BETWEEN CONDITIONED AND UNCONDITIONED SPACES SHALL BE CAULKED, GASKETED, WEATHER-STRIPPED OR OTHERWISE SEALED.
13. SAFETY GLAZING NOTATED WITH "T"

WINDOW REMARKS

1. INCLUDES SAFETY GLAZING.
2. EGRESS WINDOW. MUST MEET CBC REQUIREMENTS.
3. INSULATED TRANSLUCENT PANEL SYSTEM
4. SKYLIGHT

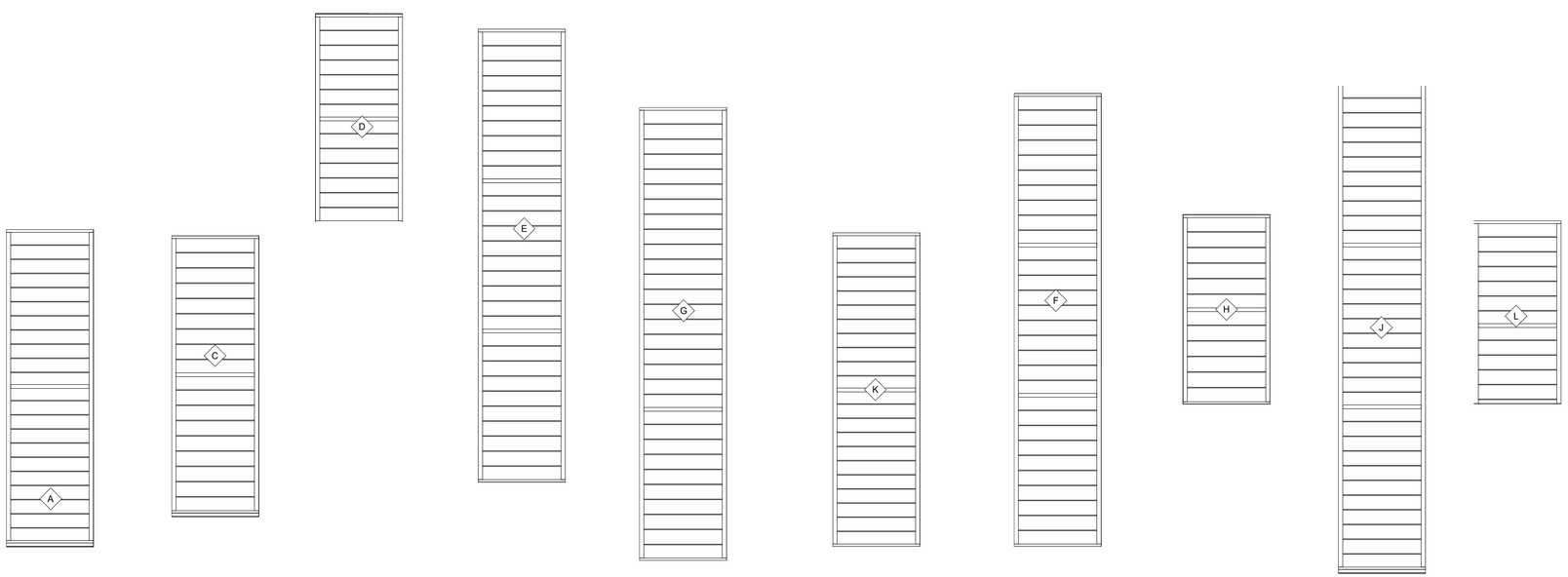

NOTE: SEE SILL HEIGHT IN ELEVATIONS

rrm design group
rrmdesign.com | (805) 543-1794
3765 SOUTH HIGUERA STREET SUITE 102
SAN LUIS OBISPO, CA 93401

THE INCLUDED DRAWINGS, SPECIFICATIONS, IDEAS, DESIGNS AND ARRANGEMENTS REPRESENTED THEREBY ARE AND SHALL REMAIN THE PROPERTY OF RRM DESIGN GROUP AND NO PART THEREOF SHALL BE COPIED, DISCLOSED TO OTHERS OR SUBSTANTIALLY UTILIZED FOR ANY PURPOSE WHATSOEVER OTHER THAN THE PROJECT FOR WHICH THEY HAVE BEEN PREPARED AND DEVELOPED WITHOUT THE WRITTEN CONSENT OF RRM DESIGN GROUP. VISUAL CONTACT WITH THESE DRAWINGS OR SPECIFICATIONS SHALL CONSTITUTE CONCLUSIVE EVIDENCE OF ACCEPTANCE OF THESE RESTRICTIONS. SUBMITTAL OF PRINTS FOR SIGNATURE AND SEALING SHALL NOT BE CONSIDERED A WAIVER OF RRM DESIGN GROUP'S RIGHTS.
RRM DESIGN GROUP COPYRIGHT 2022
RRM IS A CALIFORNIA CORPORATION

LICENSED ARCHITECT
MICHAELE SCOTT LUPO
C39878
10-31-25
RENEWAL DATE
STATE OF CALIFORNIA

CONSULTANT

AGENCY

FOURTH ST COMMUNITY CENTER AND PARK
HENDERSON AVE., PORTERVILLE, CA 93257

DOOR AND WINDOW SCHEDULES

NO.	REVISION	DATE
1	PLAN CHECK REVISION 1	05/17/24
2	PLAN CHECK REVISION 2	09/17/24

PROJECT MANAGER
TSL
DRAWN BY MC, NA, PM
CHECKED BY DD, KF
DATE
2024.09.17
PROJECT NUMBER
2883-01-RC22
SHEET
A601

PLAN CHECK REVISION 2

9/20/2024 11:03:43 AM
Autodesk Docs://2883-01_Porterville Fourth St Community Center/2883-01-RC22_Porterville_v22.rvt

5 A401 A602 **STOREFRONT 05**
SCALE: 1/4" = 1'-0"

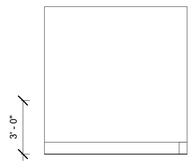

4 A401 A602 **STOREFRONT 04**
SCALE: 1/4" = 1'-0"

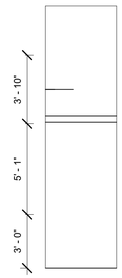

3 A401 A602 **STOREFRONT 03**
SCALE: 1/4" = 1'-0"

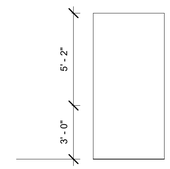

2 A401 A602 **STOREFRONT 02**
SCALE: 1/4" = 1'-0"

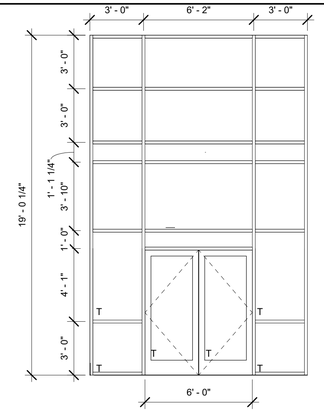

1 A501 A602 **STOREFRON ELEVATION 01**
SCALE: 1/4" = 1'-0"

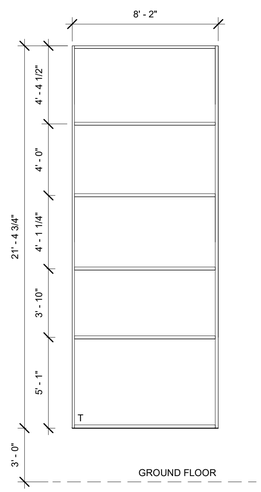

8 A501 A602 **STOREFRONT 08**
SCALE: 1/4" = 1'-0"

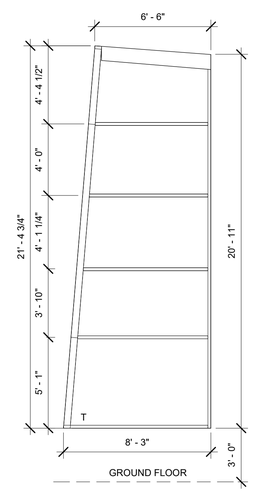

7 A501 A602 **STOREFRONT 07**
SCALE: 1/4" = 1'-0"

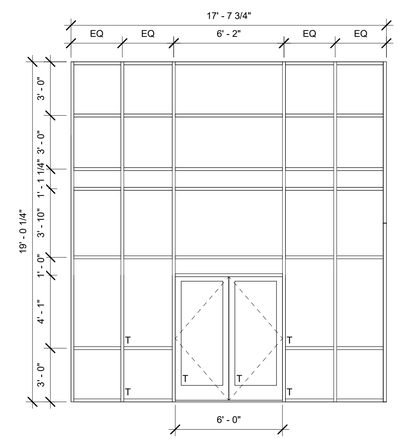

6 A401 A602 **STOREFRONT 06**
SCALE: 1/4" = 1'-0"

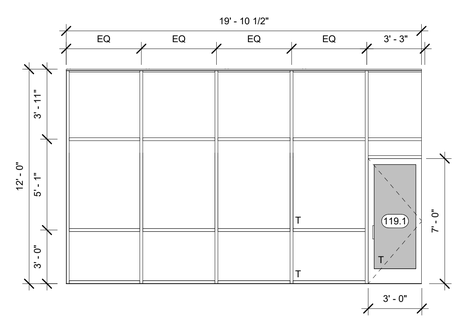

11 A501 A602 **STOREFRONT 11**
SCALE: 1/4" = 1'-0"

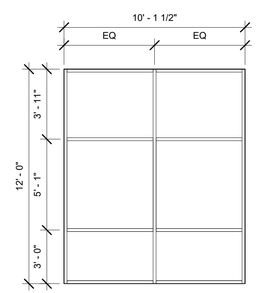

10 A501 A602 **STOREFRONT 10**
SCALE: 1/4" = 1'-0"

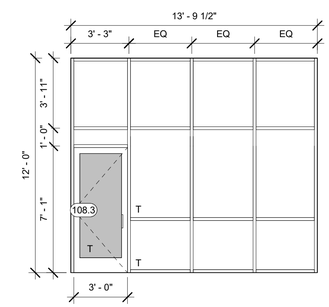

9 A501 A602 **STOREFRONT 09**
SCALE: 1/4" = 1'-0"

WINDOW GENERAL NOTES

1. REFER TO GENERAL NOTES ON SHEET GA-101 FOR ADDITIONAL REQUIREMENTS
2. REFER TO FLOOR PLANS FOR WINDOW LOCATIONS.
3. CONTRACTOR TO VERIFY EXACT ROUGH OPENING SIZES WITH WINDOW MANUFACTURER SPECIFICATIONS PRIOR TO FABRICATION OF ROUGH OPENINGS.
4. CONTRACTOR TO VERIFY ACTUAL WINDOW SIZES TO FIT FINISH OPENING PRIOR TO FABRICATION OF WINDOW AND FINISH OPENING.
5. HEAD HEIGHT MEASURED FROM FF UNLESS NOTED OTHERWISE.
6. REFER TO ENERGY COMPLIANCE REPORTS FOR U-FACTOR, SHGC AND ADDITIONAL WINDOW REQUIREMENTS.
7. ALL GLAZING IS DOUBLE PANE UNLESS OTHERWISE NOTED.
8. PROVIDE SHOP DRAWINGS FOR ALL WINDOW UNITS
9. REFER TO WINDOW TYPES LEGEND FOR GLAZING.
10. REFER TO WINDOW SCHEDULE AND WINDOW TYPES LEGEND FOR FURTHER INFORMATION.
11. STOREFRONT SECTIONS ARE 2" AND CURTAINWALL SECTIONS ARE 2-1/2", UNO. REFER TO STOREFRONT TYPES LEGEND FOR FURTHER INFORMATION.
12. WINDOWS BETWEEN CONDITIONED AND UNCONDITIONED SPACES SHALL BE CAULKED, GASKETED, WEATHER-STRIPPED OR OTHERWISE SEALED.
13. SAFETY GLAZING NOTATED WITH "T"

WINDOW REMARKS

1. INCLUDES SAFETY GLAZING.
2. EGRESS WINDOW. MUST MEET CBC REQUIREMENTS.
3. INSULATED TRANSLUCENT PANEL SYSTEM
4. SKYLIGHT

rrm design group
rrmdesign.com | (805) 543-1794
3765 SOUTH HIGUERA STREET SUITE 102
SAN LUIS OBISPO, CA 93401

THE INCLUDED DRAWINGS, SPECIFICATIONS, IDEAS, DESIGNS AND ARRANGEMENTS REPRESENTED THEREBY ARE AND SHALL REMAIN THE PROPERTY OF RRM DESIGN GROUP AND NO PART THEREOF SHALL BE COPIED, DISCLOSED TO OTHERS OR EXHIBITED WITHOUT THE WRITTEN CONSENT OF RRM DESIGN GROUP, AND THEY ARE TO BE USED ONLY FOR THE PROJECT FOR WHICH THEY HAVE BEEN PREPARED AND DEVELOPED WITHOUT THE WRITTEN CONSENT OF RRM DESIGN GROUP. VISUAL CONTACT WITH THESE DRAWINGS OR SPECIFICATIONS SHALL CONSTITUTE CONCLUSIVE EVIDENCE OF ACCEPTANCE OF THESE RESTRICTIONS. SUBMITTAL OF PRELIMINARY DRAWINGS FOR REVIEW SHALL NOT BE CONSIDERED A WAIVER OF RRM DESIGN GROUP'S RIGHTS.
RRM DESIGN GROUP COPYRIGHT 2022
RRM IS A CALIFORNIA CORPORATION

CONSULTANT

AGENCY

FOURTH ST COMMUNITY CENTER AND PARK
HENDERSON AVE., PORTERVILLE, CA 93257

STOREFRONT SCHEDULES

NO.	REVISION	DATE
△		
△		
△		
△		
△		
△		

PROJECT MANAGER
TSL
DRAWN BY MC, NA, PM
CHECKED BY DD, KF
DATE
2024.09.17
PROJECT NUMBER
2883-01-RC22
SHEET
A602

PLAN CHECK REVISION 2

9/20/2024 11:03:44 AM
Autodesk Docs://2883-01_Portenville Fourth St Community Center/2883-01-RC22_Porterville_v22.rvt

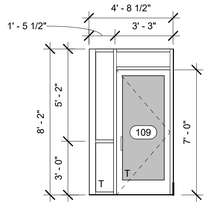

16 STOREFRONT 16
A501 | A603 SCALE: 1/4" = 1'-0"

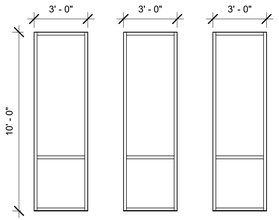

15 STOREFRONT 15
A501 | A603 SCALE: 1/4" = 1'-0"

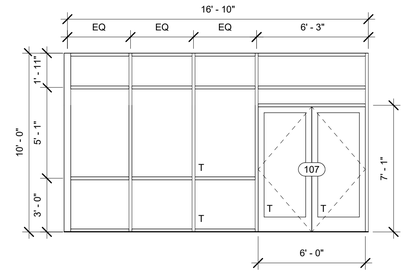

14 STOREFRONT 14
A401 | A603 SCALE: 1/4" = 1'-0"

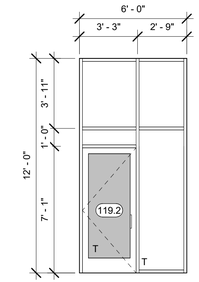

13 STOREFRONT 13
A501 | A603 SCALE: 1/4" = 1'-0"

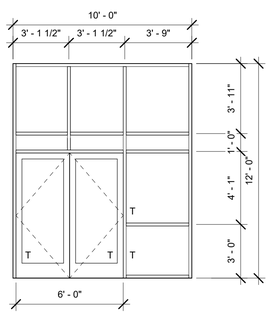

20 STOREFRONT ELEVATION 20
A501 | A603 SCALE: 1/4" = 1'-0"

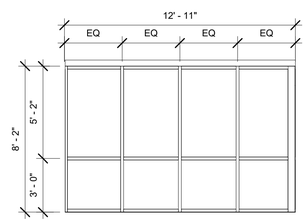

19 STOREFRONT 19
A501 | A603 SCALE: 1/4" = 1'-0"

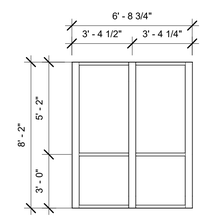

18 STOREFRONT 18
A501 | A603 SCALE: 1/4" = 1'-0"

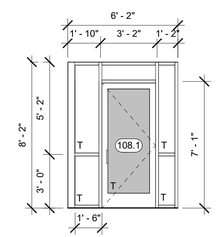

17 STOREFRONT 17
A501 | A603 SCALE: 1/4" = 1'-0"

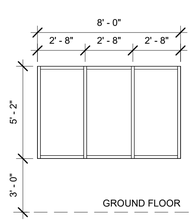

25 STOREFRONT 25
A501 | A603 SCALE: 1/4" = 1'-0"

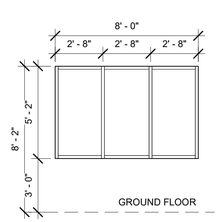

24 STOREFRONT 24
A501 | A603 SCALE: 1/4" = 1'-0"

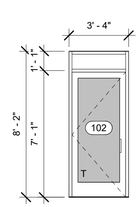

23 STOREFRONT 23
A501 | A603 SCALE: 1/4" = 1'-0"

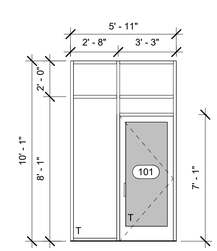

22 STOREFRONT 22
A401 | A603 SCALE: 1/4" = 1'-0"

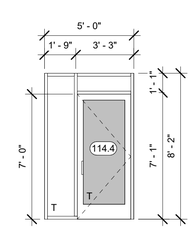

21 STOREFRONT 21
A501 | A603 SCALE: 1/4" = 1'-0"

WINDOW GENERAL NOTES

1. REFER TO GENERAL NOTES ON SHEET GA-101 FOR ADDITIONAL REQUIREMENTS
2. REFER TO FLOOR PLANS FOR WINDOW LOCATIONS.
3. CONTRACTOR TO VERIFY EXACT ROUGH OPENING SIZES WITH WINDOW MANUFACTURER SPECIFICATIONS PRIOR TO FABRICATION OF ROUGH OPENINGS.
4. CONTRACTOR TO VERIFY ACTUAL WINDOW SIZES TO FIT FINISH OPENING PRIOR TO FABRICATION OF WINDOW AND FINISH OPENING.
5. HEAD HEIGHT MEASURED FROM FF UNLESS NOTED OTHERWISE.
6. REFER TO ENERGY COMPLIANCE REPORTS FOR U-FACTOR, SHGC AND ADDITIONAL WINDOW REQUIREMENTS.
7. ALL GLAZING IS DOUBLE PANE UNLESS OTHERWISE NOTED.
8. PROVIDE SHOP DRAWINGS FOR ALL WINDOW UNITS
9. REFER TO WINDOW TYPES LEGEND FOR GLAZING.
10. REFER TO WINDOW SCHEDULE AND WINDOW TYPES LEGEND FOR FURTHER INFORMATION.
11. STOREFRONT SECTIONS ARE 2" AND CURTAINWALL SECTIONS ARE 2-1/2", UNO. REFER TO STOREFRONT TYPES LEGEND FOR FURTHER INFORMATION.
12. WINDOWS BETWEEN CONDITIONED AND UNCONDITIONED SPACES SHALL BE CAULKED, GASKETED, WEATHER-STRIPPED OR OTHERWISE SEALED.
13. SAFETY GLAZING NOTATED WITH "T"

WINDOW REMARKS

1. INCLUDES SAFETY GLAZING.
2. EGRESS WINDOW. MUST MEET CBC REQUIREMENTS.
3. INSULATED TRANSLUCENT PANEL SYSTEM
4. SKYLIGHT

rrm design group
rrmdesign.com | (805) 543-1794
3765 SOUTH HIGUERA STREET SUITE 102
SAN LUIS OBISPO, CA 93401

THE INCLUDED DRAWINGS, SPECIFICATIONS, IDEAS, DESIGNS AND ARRANGEMENTS REPRESENTED THEREBY ARE AND SHALL REMAIN THE PROPERTY OF RRM DESIGN GROUP AND NO PART THEREOF SHALL BE COPIED, DISCLOSED TO OTHERS OR EXHIBITED WITHOUT THE WRITTEN CONSENT OF RRM DESIGN GROUP, FOR ANY PURPOSE NOT PERTINENT TO THE PROJECT FOR WHICH THEY HAVE BEEN PREPARED AND DEVELOPED WITHOUT THE WRITTEN CONSENT OF RRM DESIGN GROUP. VISUAL CONTACT WITH THESE DRAWINGS OR SPECIFICATIONS SHALL CONSTITUTE CONCLUSIVE EVIDENCE OF ACCEPTANCE OF THESE RESTRICTIONS. SUBMITTAL OF PROPOSALS FOR THE USE OF THESE DOCUMENTS SHALL ALSO BE CONSIDERED AS A WAIVER OF RRM DESIGN GROUP'S RIGHTS.
RRM DESIGN GROUP COPYRIGHT 2022
RRM IS A CALIFORNIA CORPORATION

CONSULTANT

AGENCY

FOURTH ST COMMUNITY CENTER AND PARK
HENDERSON AVE., PORTERVILLE, CA 93257

STOREFRONT SCHEDULES

NO.	REVISION	DATE

PROJECT MANAGER: TSL
DRAWN BY: MC, NA, PM
CHECKED BY: DD, KF
DATE: 2024.09.17
PROJECT NUMBER: 2883-01-RC22
SHEET: A603

PLAN CHECK REVISION 2

9/20/2024 11:03:45 AM
Autodesk Docs://2883-01_Porterville Fourth St Community Center/2883-01-RC22_Porterville_v22.rvt

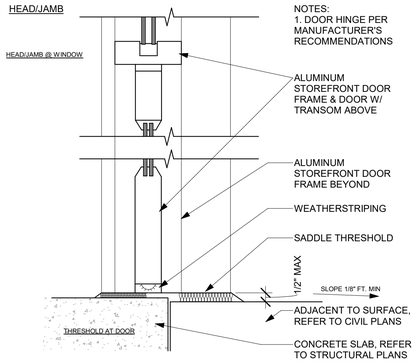

51 STOREFRONT DOOR
A901 SCALE: 3" = 1'-0"

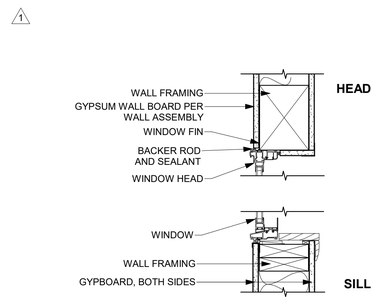

41 WINDOW HEAD AND SILL - INTERIOR
A901 SCALE: 1 1/2" = 1'-0"

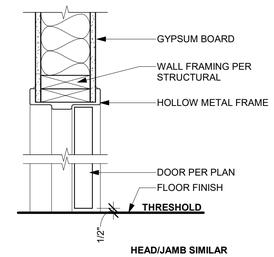

31 HOLLOW METAL DOOR - INTERIOR
A901 SCALE: 1 1/2" = 1'-0"

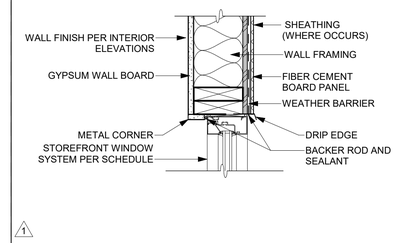

21 STOREFRONT HEAD AT FIBER CEMENT
A901 SCALE: 1 1/2" = 1'-0"

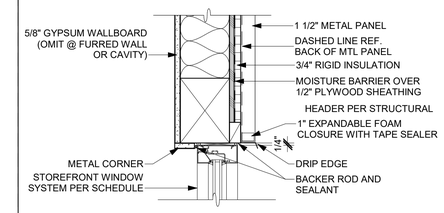

11 STOREFRONT HEAD AT METAL PANEL
A901 SCALE: 1 1/2" = 1'-0"

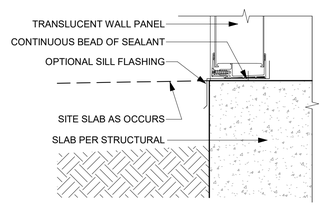

42 KALWALL SILL AT GROUND
A901 SCALE: 3" = 1'-0"

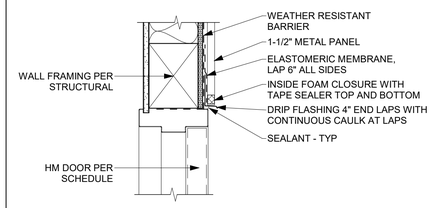

32 DOOR HEAD - METAL PANEL
A901 SCALE: 1 1/2" = 1'-0"

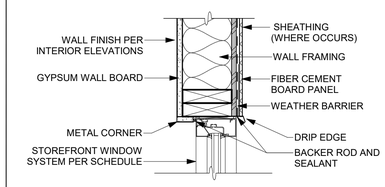

22 STOREFRONT JAMB AT FIBER CEMENT
A901 SCALE: 1 1/2" = 1'-0"

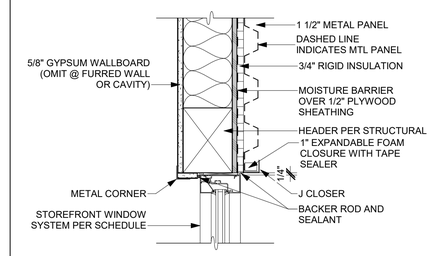

12 STOREFRONT JAMB AT METAL PANEL
A901 SCALE: 1 1/2" = 1'-0"

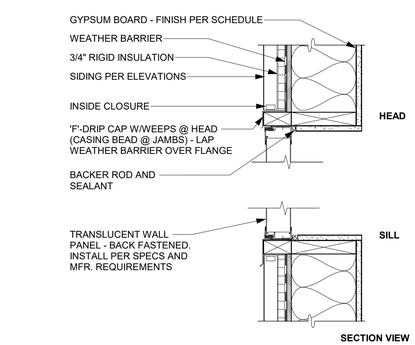

53 KALWALL HEAD AND SILL
A413 A901 SCALE: 1 1/2" = 1'-0"

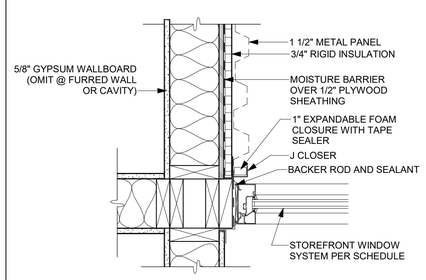

43 STOREFRONT JAMB AT METAL PANEL
A901 SCALE: 1 1/2" = 1'-0"

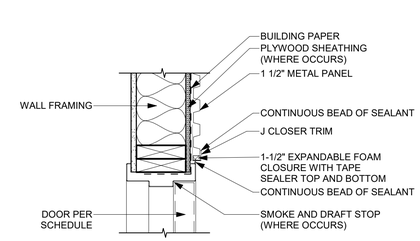

33 DOOR JAMB -METAL PANEL
A901 SCALE: 1 1/2" = 1'-0"

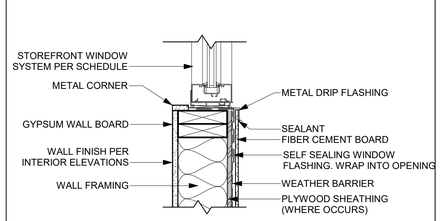

23 WIN-SILL @ FIBER CMT. SIDING
A901 SCALE: 1 1/2" = 1'-0"

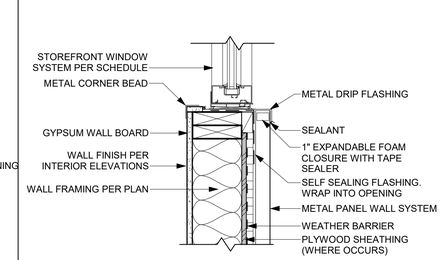

13 STOREFRONT SILL @ MTL PANEL
A901 SCALE: 1 1/2" = 1'-0"

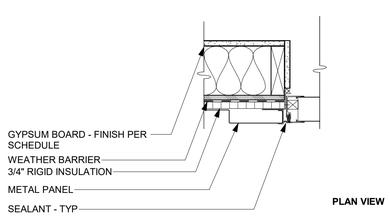

54 KALWALL JAMB
A901 SCALE: 1 1/2" = 1'-0"

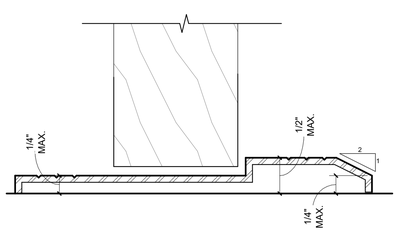

CBC 2022 11B-303.2 & 11B-303.3 THRESHOLDS.

11B-303.2: CHANGES IN LEVEL OF 1/4 INCH (6.4 MM) HIGH MAXIMUM SHALL BE PERMITTED TO BE VERTICAL AND WITHOUT EDGE TREATMENT.

11B-303.3: CHANGES IN LEVEL BETWEEN 1/4 INCH (6.4 MM) HIGH MINIMUM AND 1/2 INCH (12.7 MM) HIGH MAXIMUM SHALL BE BEVELED WITH A SLOPE NOT STEEPER THAN 1:2.

44 DOOR THRESHOLD
A901 SCALE: 12" = 1'-0"

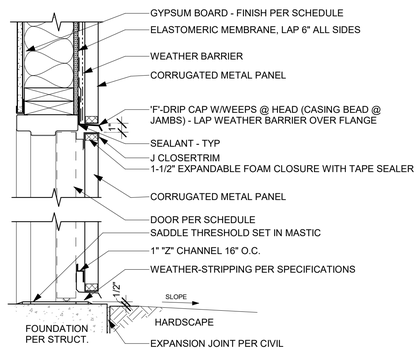

34 EXTERIOR HOLLOW METAL DOOR
A411 A901 SCALE: 1 1/2" = 1'-0"

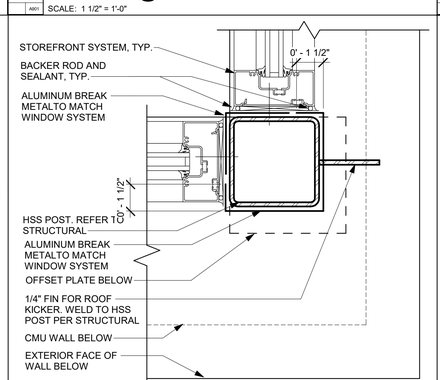

24 STOREFRONT JAMB AT CORNER
A901 SCALE: 3" = 1'-0"

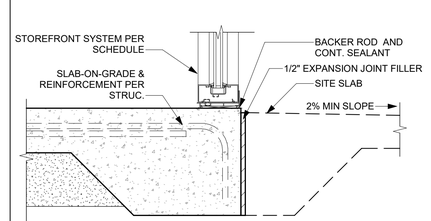

14 STOREFRONT SILL DETAIL
A412 A901 SCALE: 1 1/2" = 1'-0"

rrm design group
rrmdesign.com | (805) 543-1794
3765 SOUTH HIGUERA STREET, SUITE 102
SAN LUIS OBISPO, CA 93401

THE INCLUDED DRAWINGS, SPECIFICATIONS, IDEAS, DESIGNS AND ARRANGEMENTS REPRESENTED THEREBY ARE AND SHALL REMAIN THE PROPERTY OF RRM DESIGN GROUP AND NO PART THEREOF SHALL BE COPIED, DISCLOSED TO OTHERS OR SUBSTANTIALLY USED FOR ANY PURPOSE WITHOUT THE PRIOR WRITTEN CONSENT OF RRM DESIGN GROUP. THEY ARE TO BE USED ONLY FOR THE PROJECT FOR WHICH THEY HAVE BEEN PREPARED AND DEVELOPED WITHOUT THE WRITTEN CONSENT OF RRM DESIGN GROUP. VISUAL CONTACT WITH THESE DRAWINGS OR SPECIFICATIONS SHALL CONSTITUTE CONCLUSIVE EVIDENCE OF ACCEPTANCE OF THESE RESTRICTIONS. SUBMITTAL OF PRELIMINARY DRAWINGS FOR REVIEW SHALL NOT BE CONSIDERED A WAIVER OF RRM DESIGN GROUP'S RIGHTS.
RRM DESIGN GROUP COPYRIGHT 2022
RRM IS A CALIFORNIA CORPORATION

LICENSED ARCHITECT
MICHAEL SCOTT LUNDQUIST
C39878
10-31-25
RENEWAL DATE
STATE OF CALIFORNIA

CONSULTANT

AGENCY

FOURTH ST COMMUNITY CENTER AND PARK
HENDERSON AVE., PORTERVILLE, CA 93257
ARCHITECTURAL DETAILS - DOOR AND WINDOW

NO.	REVISION	DATE
1	PLAN CHECK REVISION 1	05/17/24

PROJECT MANAGER
TSL
DRAWN BY MC, NA, PM
CHECKED BY DD, KF
DATE 2024.09.17
PROJECT NUMBER 2883-01-RC22
SHEET A901

PLAN CHECK REVISION 2

9/20/2024 11:03:47 AM
Autodesk Docs://2883-01_Porterville Fourth St Community Center/2883-01-RC22_Porterville_v22.rvt

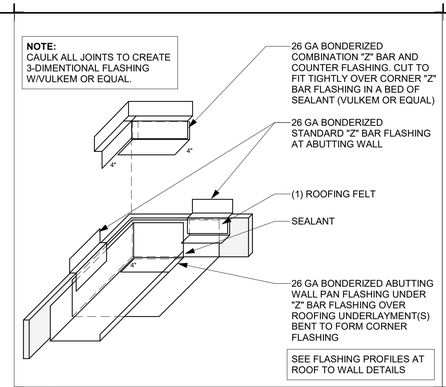

21 ROOF TO WALL TYP. FLASHING 5

A902 SCALE: 3" = 1'-0"

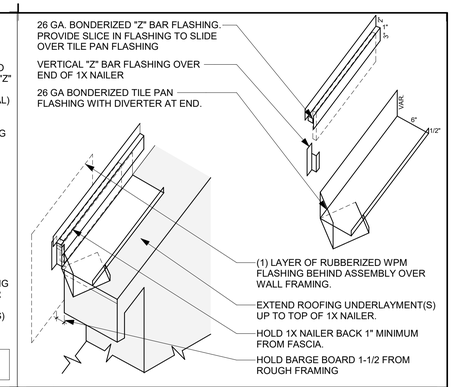

11 ROOF TO WALL TYP. FLASHING 1

A902 SCALE: 6" = 1'-0"

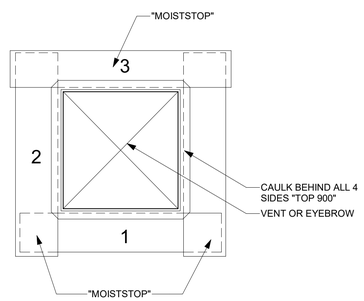

42 FLASHING-G.I. VENT

A902 SCALE: 1" = 1'-0"

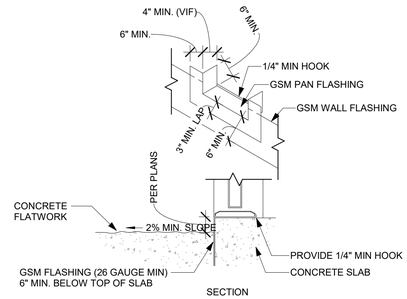

TYPICAL DOOR FLASHING AT GRADE

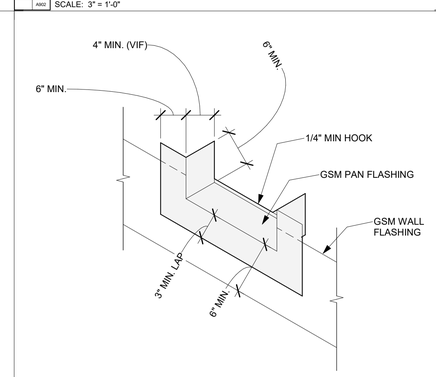

22 FLASHING - DOOR AT GRADE

A902 SCALE: 3" = 1'-0"

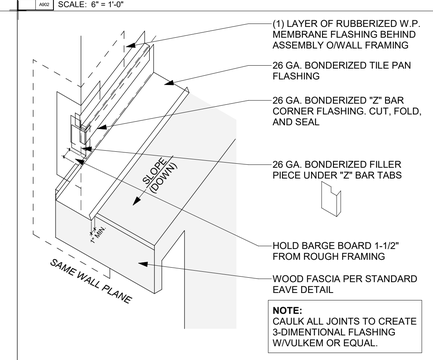

12 ROOF TO WALL TYP. FLASHING 2

A902 SCALE: 3" = 1'-0"

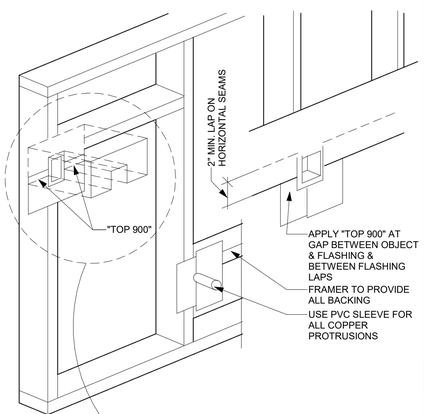

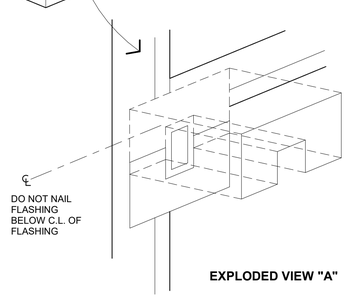

EXPLODED VIEW "A"

ALL OBJECTS PROTRUDING THROUGH WALL PLANE MUST BE FLASHED ACCORDING TO THESE DETAILS

44 FLASHING-PROTRUSIONS

A902 SCALE: 1 1/2" = 1'-0"

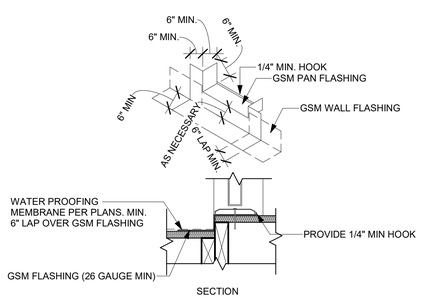

TYPICAL DOOR FLASHING AT W.P. DECK

33 FLASHING - DOOR TYP.

A902 SCALE: 1 1/2" = 1'-0"

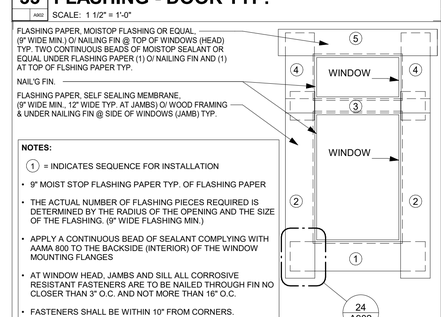

NOTES:

- (1) = INDICATES SEQUENCE FOR INSTALLATION
- 9" MOIST STOP FLASHING PAPER TYP. OF FLASHING PAPER
- THE ACTUAL NUMBER OF FLASHING PIECES REQUIRED IS DETERMINED BY THE RADIUS OF THE OPENING AND THE SIZE OF THE FLASHING. (9" WIDE FLASHING MIN.)
- APPLY A CONTINUOUS BEAD OF SEALANT COMPLYING WITH AAMA 800 TO THE BACKSIDE (INTERIOR) OF THE WINDOW MOUNTING FLANGES
- AT WINDOW HEAD, JAMBS AND SILL ALL CORROSIVE RESISTANT FASTENERS ARE TO BE NAILED THROUGH FIN NO CLOSER THAN 3" O.C. AND NOT MORE THAN 16" O.C.
- FASTENERS SHALL BE WITHIN 10" FROM CORNERS.
- NO NAILS SHALL BE BENT OVER THE NAILING FIN TO SECURE WINDOW
- REFER TO AAMA 2400-10 STANDARD PRACTICE FOR INSTALLATION OF WINDOWS WITH MOUNTING FLANGES IN STUD CONSTRUCTION FOR ADDITIONAL REQUIREMENTS.

34 FLASHING - WINDOW TYP.

A902 SCALE: 12" = 1'-0"

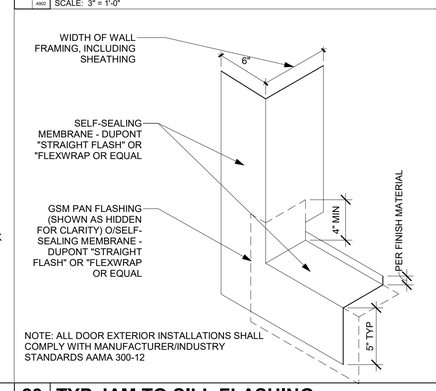

23 TYP JAM TO SILL FLASHING

A902 SCALE: 3" = 1'-0"

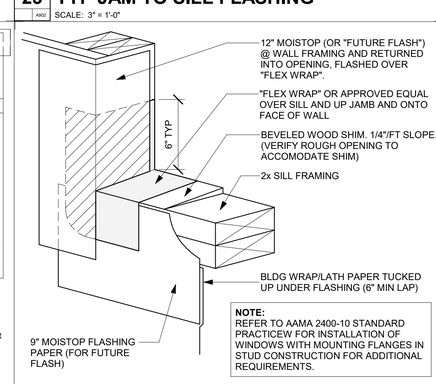

24 FLASHING - WINDOW CORNER TYP.

A902 SCALE: 12" = 1'-0"

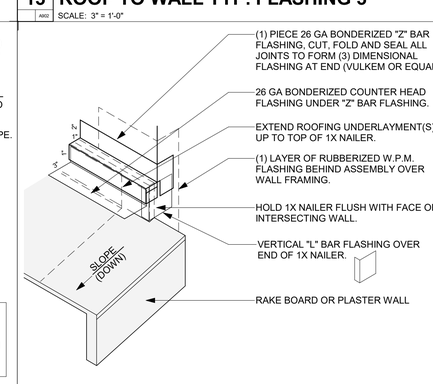

13 ROOF TO WALL TYP. FLASHING 3

A902 SCALE: 3" = 1'-0"

14 ROOF TO WALL TYP. FLASHING 4

A902 SCALE: 3" = 1'-0"

rrm design group
rrmdesign.com | (805) 543-1794
3765 SOUTH HIGUERA STREET SUITE 102
SAN LUIS OBISPO, CA 93401

THE INCLUDED DRAWINGS, SPECIFICATIONS, IDEAS, DESIGNS AND ARRANGEMENTS REPRESENTED THEREBY ARE AND SHALL REMAIN THE PROPERTY OF RRM DESIGN GROUP AND NO PART THEREOF SHALL BE COPIED, DISCLOSED TO OTHERS OR SUBSTANTIALLY USED FOR ANY PURPOSE WITHOUT THE PERMISSION OF RRM DESIGN GROUP, PROJECT FOR WHICH THEY HAVE BEEN PREPARED AND DEVELOPED WITHOUT THE WRITTEN CONSENT OF RRM DESIGN GROUP. VISUAL CONTACT WITH THESE DRAWINGS OR SPECIFICATIONS SHALL CONSTITUTE CONCLUSIVE EVIDENCE OF ACCEPTANCE OF THESE RESTRICTIONS. SUBMITTAL OF PRELIMINARY DRAWINGS FOR REVIEW SHALL NOT BE CONSIDERED A WAIVER OF RRM DESIGN GROUP'S RIGHTS.
RRM DESIGN GROUP COPYRIGHT 2022
RRM IS A CALIFORNIA CORPORATION

LICENSED ARCHITECT
MICHAEL SCOTT LUPO
C39678
10-31-25
RENEWAL DATE
STATE OF CALIFORNIA

CONSULTANT

AGENCY

FOURTH ST COMMUNITY CENTER AND PARK
HENDERSON AVE., PORTERVILLE, CA 93257

ARCHITECTURAL DETAILS - FLASHING

NO.	REVISION	DATE
△		
△		
△		
△		
△		
△		

PROJECT MANAGER
TSL

DRAWN BY MC, NA, PM
CHECKED BY DD, KF

DATE
2024.09.17

PROJECT NUMBER
2883-01-RC22

SHEET
A902

PLAN CHECK REVISION 2

9/20/2024 11:03:48 AM
Autodesk Docs://2883-01_Porterville Fourth St Community Center/2883-01-RC22_Porterville_v22.rvt

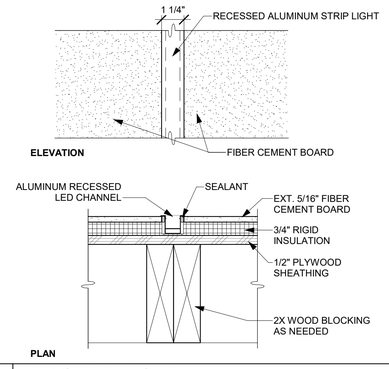

51 LED STRIP LIGHT
A201 A903 SCALE: 3" = 1'-0"

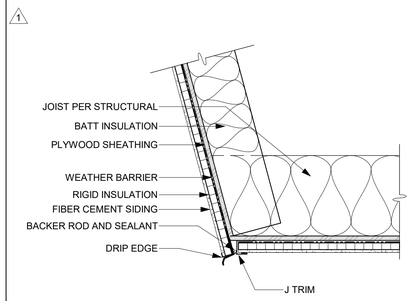

41 EXTERIOR OVERHANG
A414 A903 SCALE: 1 1/2" = 1'-0"

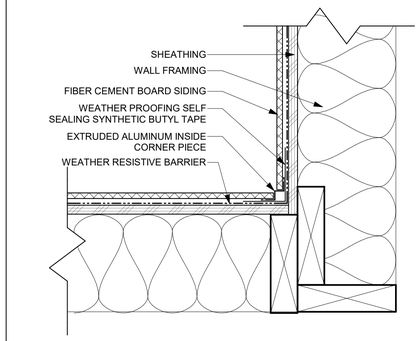

31 FIBER CEMENT BOARD - INSIDE CORNER
A903 SCALE: 3" = 1'-0"

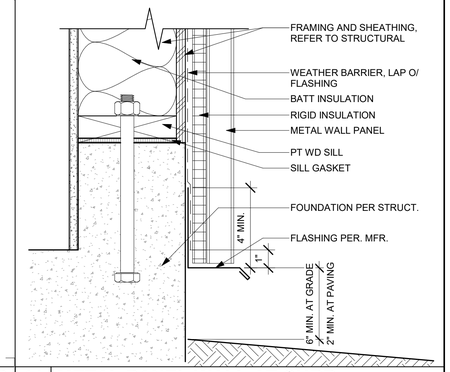

11 METAL PANEL WALL AT CURB
A903 SCALE: 3" = 1'-0"

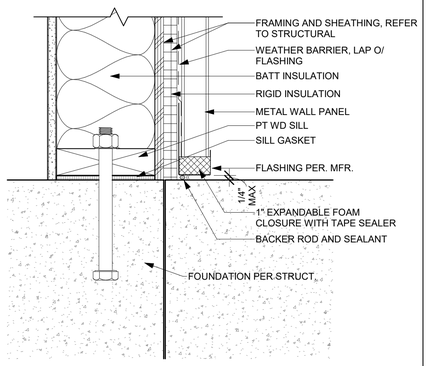

62 METAL PANEL WALL AT LEVEL CONC.
A903 SCALE: 3" = 1'-0"

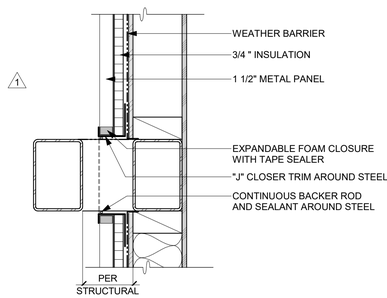

52 STEEL PENETRATION-MTL PANEL WALL
A903 SCALE: 1 1/2" = 1'-0"

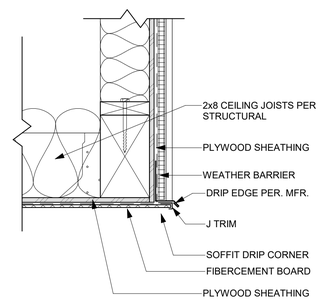

42 EXT. PLASTER SOFFIT TO WALL
A903 SCALE: 1 1/2" = 1'-0"

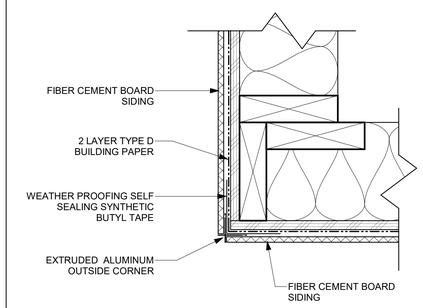

32 FIBER CEMENT BOARD - EXT. CORNER
A903 SCALE: 3" = 1'-0"

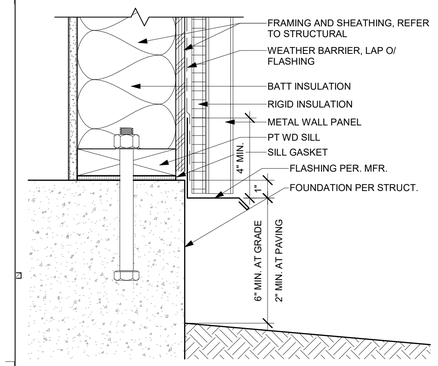

12 METAL PANEL WALL AT FINISH GRADE
A411 A903 SCALE: 3" = 1'-0"

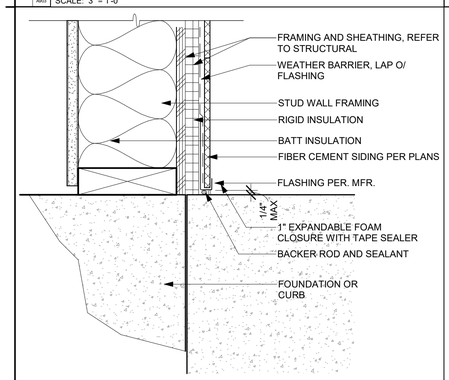

63 FIBER CEMENT WALL AT LEVEL CONC.
A903 SCALE: 3" = 1'-0"

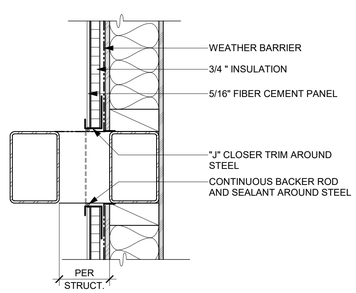

53 STEEL PENETRATION-FIBER CEMENT
A903 SCALE: 1 1/2" = 1'-0"

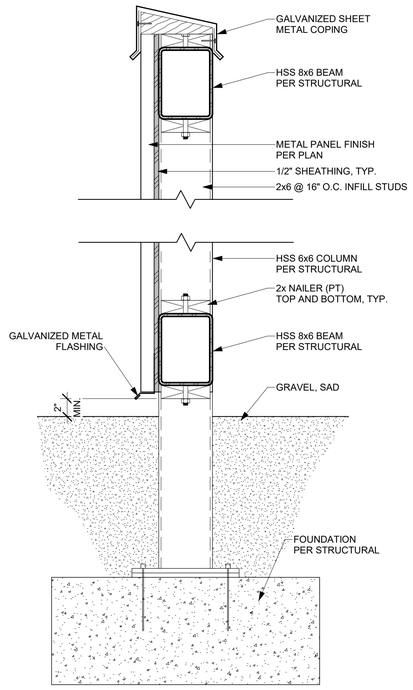

44 ENCLOSURE WALL
A2 A903 SCALE: 1 1/2" = 1'-0"

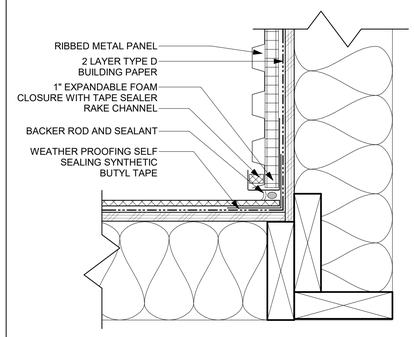

33 FIBER CEMENT BOARD TO MTL PANEL
A903 SCALE: 3" = 1'-0"

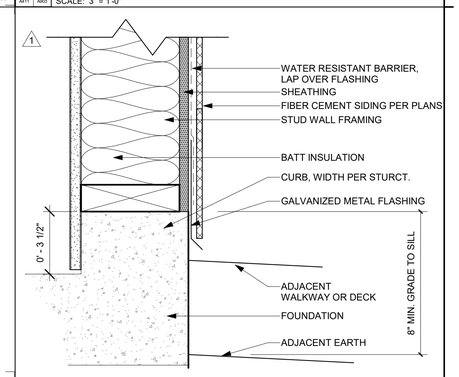

13 FIBER CEMENT WALL AT FINISH GRADE
A412 A903 SCALE: 3" = 1'-0"

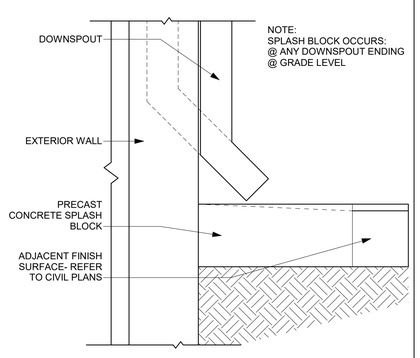

54 SPLASH BLOCK
A903 SCALE: 1 1/2" = 1'-0"

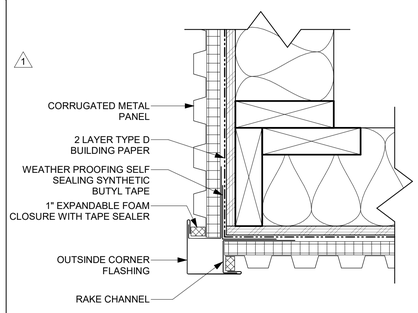

34 METAL PANEL - OUTSIDE CORNER
A903 SCALE: 3" = 1'-0"

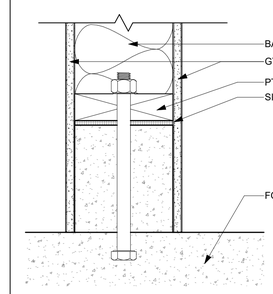

14 WALL CURB - INTERIOR
A903 SCALE: 3" = 1'-0"

rrm design group
rrmdesign.com | (805) 543-1794
3765 SOUTH HIGUERA STREET SUITE 102
SAN LUIS OBISPO, CA 93401

THE INCLUDED DRAWINGS, SPECIFICATIONS, IDEAS, DESIGNS AND ARRANGEMENTS REPRESENTED THEREBY ARE AND SHALL REMAIN THE PROPERTY OF RRM DESIGN GROUP AND NO PART THEREOF SHALL BE COPIED, DISCLOSED TO OTHERS OR SUBSTANTIALLY USED FOR ANY PURPOSE WITHOUT THE WRITTEN CONSENT OF AN OWNER OF PROJECT FOR WHICH THEY HAVE BEEN PREPARED AND DEVELOPED WITHOUT THE WRITTEN CONSENT OF RRM DESIGN GROUP. VISUAL CONTACT WITH THESE DRAWINGS OR SPECIFICATIONS SHALL CONSTITUTE CONCLUSIVE EVIDENCE OF ACCEPTANCE OF THESE RESTRICTIONS. SUBMITTAL OF PRELIMINARY DRAWINGS FOR REVIEW SHALL NOT BE CONSIDERED AS A WAIVER OF RRM DESIGN GROUP'S RIGHTS.
RRM DESIGN GROUP COPYRIGHT 2022
RRM IS A CALIFORNIA CORPORATION

CONSULTANT

AGENCY

FOURTH ST COMMUNITY CENTER AND PARK
HENDERSON AVE., PORTERVILLE, CA 93257

ARCHITECTURAL DETAILS - EXTERIOR

NO.	REVISION	DATE
1	PLAN CHECK REVISION 1	05/17/24

PROJECT MANAGER
TSL
DRAWN BY MC, NA, PM
CHECKED BY DD, KF
DATE
2024.09.17
PROJECT NUMBER
2883-01-RC22
SHEET
A903

PLAN CHECK REVISION 2

9/20/2024 11:03:49 AM
Autodesk Docs://2883-01_Portenville Fourth St Community Center/2883-01-RC22_Porterville_v22.rvt

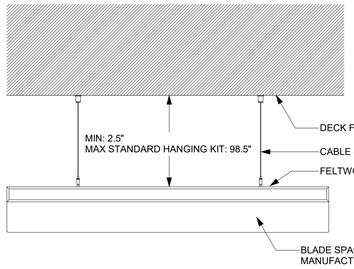

51 ACCUSTIC BLADES CEILING
A905 SCALE: 1/2" = 1'-0"

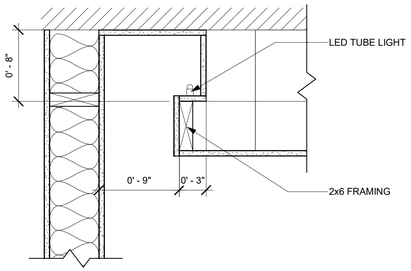

41 COVE LIGHT DETAIL
A905 SCALE: 1 1/2" = 1'-0"

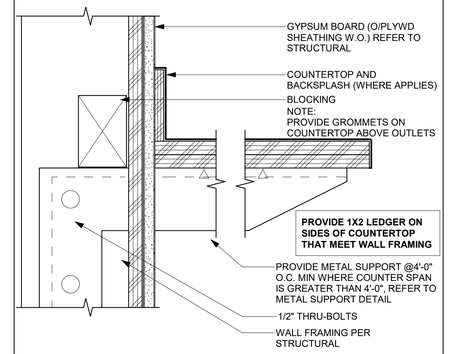

21 WORK AREA/COUNTERTOP SUPPORT
A812 A905 SCALE: 3" = 1'-0"

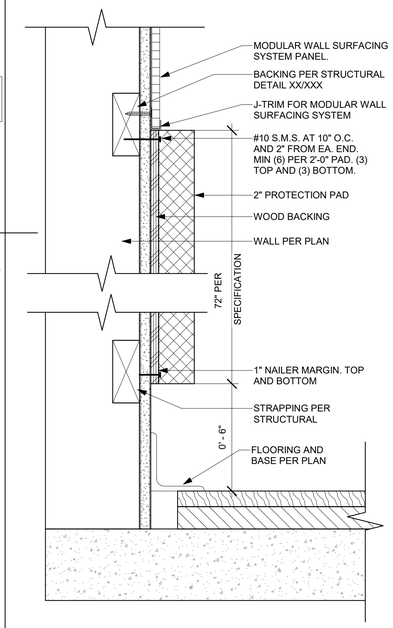

12 WALL MOUNTED PROTECTION PAD
A411 A905 SCALE: 3" = 1'-0"

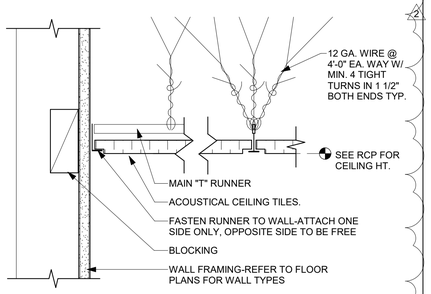

52 ACOUSTIC CEILING GRID DETAIL
A812 A905 SCALE: 3" = 1'-0"

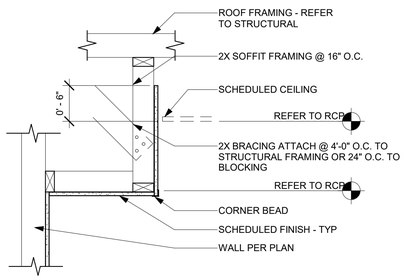

42 SOFFIT FRAMING
A906 A905 SCALE: 1" = 1'-0"

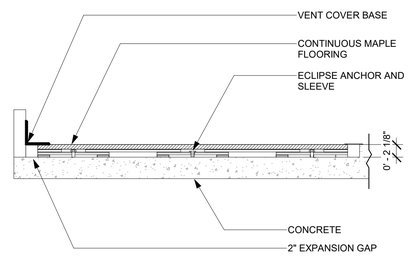

32 GYM FLOOR
A905 SCALE: 1" = 1'-0"

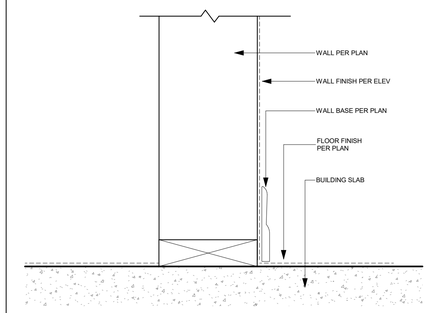

22 WALL BASE
A905 SCALE: 3" = 1'-0"

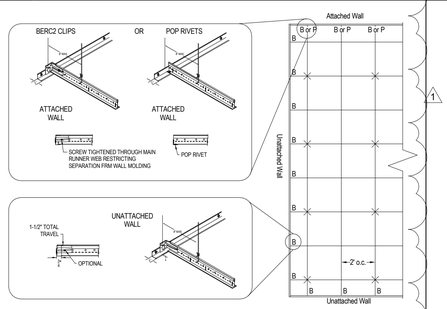

NOTE:MIN. OF TWO-INCH WIDTH FOR THE SUSPENDED CEILING PERIMETER CLOSURE ANGLES.

ARMSTRONG CEILING SYSTEM

53 ACT CEILING - INSTALLATION
A905 NTS

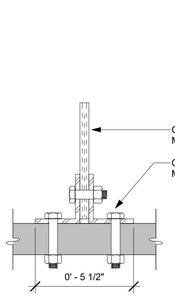

43 RACQUETBALL GLASS DETAIL
A905 SCALE: 3" = 1'-0"

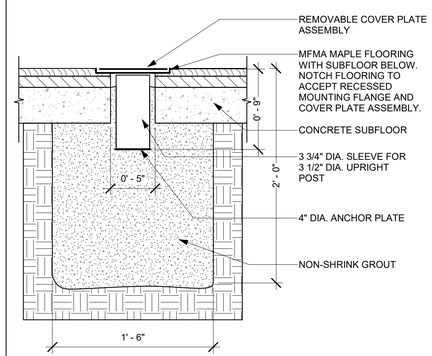

33 VOLLEYBALL POST SLEEVE
A905 SCALE: 1 1/2" = 1'-0"

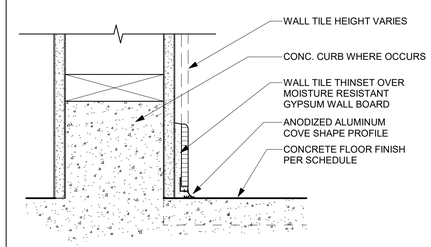

23 CERAMIC TILE WALL-BASE
A905 SCALE: 3" = 1'-0"

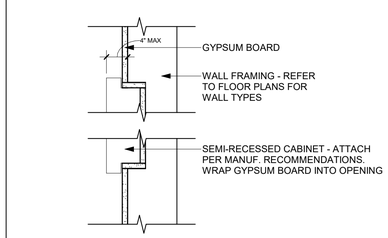

MOUNT WITH OPERABLE PORTION OF CABINET OR EXTINGUISHER AT 48" MAX. A.F.F.

13 FIRE EXTINGUISHER CABINET
A905 SCALE: 1 1/2" = 1'-0"

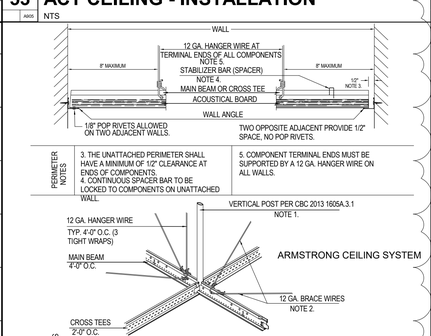

ARMSTRONG CEILING SYSTEM

54 ACT SYSTEM - SEISMIC BRACING
A905 NTS

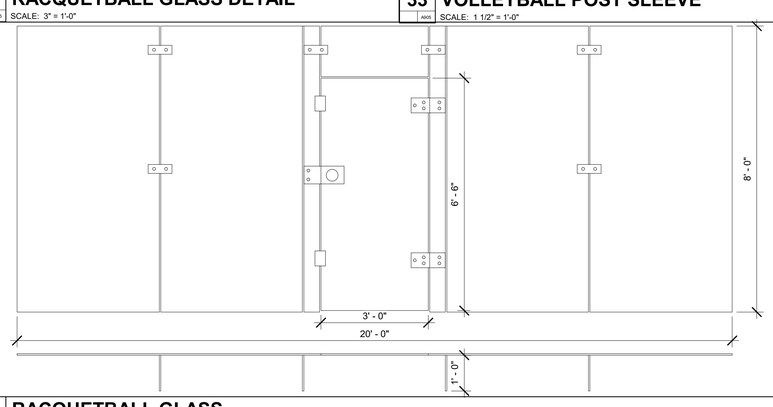

44 RACQUETBALL GLASS
A402 A905 SCALE: 1/2" = 1'-0"

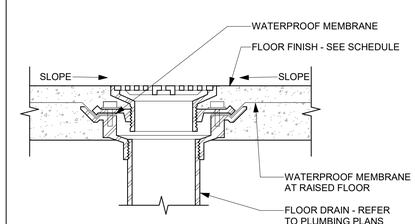

24 FLOOR DRAIN
A905 SCALE: 3" = 1'-0"

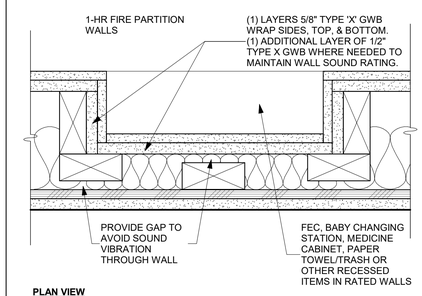

PLAN VIEW

14 RECESSED FIXTURE IN RATED WALL
A905 SCALE: 3" = 1'-0"

rrm design group
rrmdesign.com | (805) 543-1794
3765 SOUTH HIGUERA STREET, SUITE 102
SAN LUIS OBISPO, CA 93401

THE INCLUDED DRAWINGS, SPECIFICATIONS, IDEAS, DESIGNS AND ARRANGEMENTS REPRESENTED THEREBY ARE AND SHALL REMAIN THE PROPERTY OF RRM DESIGN GROUP AND NO PART THEREOF SHALL BE COPIED, DISCLOSED TO OTHERS OR SUBSTANTIALLY UTILIZED FOR ANY PURPOSE WHATSOEVER OTHER THAN THE PROJECT FOR WHICH THEY HAVE BEEN PREPARED AND DEVELOPED WITHOUT THE WRITTEN CONSENT OF RRM DESIGN GROUP. VISUAL CONTACT WITH THESE DRAWINGS OR SPECIFICATIONS SHALL CONSTITUTE CONCLUSIVE EVIDENCE OF ACCEPTANCE OF THESE RESTRICTIONS. SUBMITTAL OF PRELIMINARY DRAWINGS FOR REVIEW SHALL NOT BE CONSIDERED A WAIVER OF RRM DESIGN GROUP'S RIGHTS.
RRM DESIGN GROUP COPYRIGHT 2022
RRM IS A CALIFORNIA CORPORATION

LICENSED ARCHITECT
MICHELLE SCOTT LUNDY
C39878
10-31-25
RENEWAL DATE
STATE OF CALIFORNIA

CONSULTANT

AGENCY

FOURTH ST COMMUNITY CENTER AND PARK
HENDERSON AVE., PORTERVILLE, CA 93257
ARCHITECTURAL DETAILS - INTERIOR

NO.	REVISION	DATE
1	PLAN CHECK REVISION 1	05/17/24
2	PLAN CHECK REVISION 2	09/17/24

PROJECT MANAGER TSL
DRAWN BY MC, NA, PM
CHECKED BY DD, KF
DATE 2024.09.17
PROJECT NUMBER 2883-01-RC22
SHEET A905

PLAN CHECK REVISION 2

9/20/2024 11:03:50 AM
Autodesk Docs://2883-01_Porterville Fourth St Community Center/2883-01-RC22_Porterville_v22.rvt

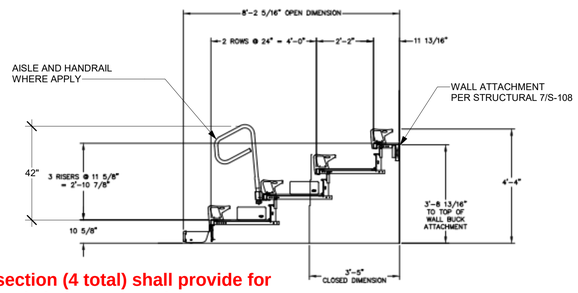

Each bleacher section (4 total) shall provide for 1 accessible wheel chair space and seat.

BLEACHERS SHALL COMPLY WITH ICC 300, 2023 AND CBC 2022

51 BLEACHERS SECTION

A906 SCALE: 3/8" = 1'-0"

***34" max height on counters/sinks is measured from finished floor to the top of the highest point inclusive of lips created by sinks, counter edges, windows, etc.**

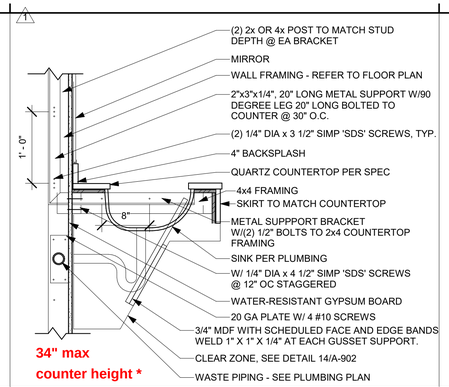

31 LAVATORY COUNTER

A911 A906 SCALE: 1" = 1'-0"

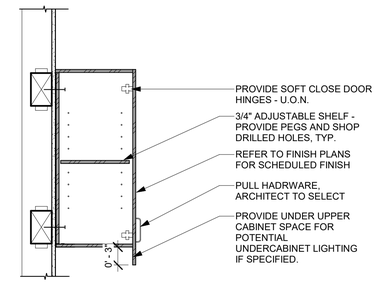

21 UPPER CABINET

A912 A906 SCALE: 1" = 1'-0"

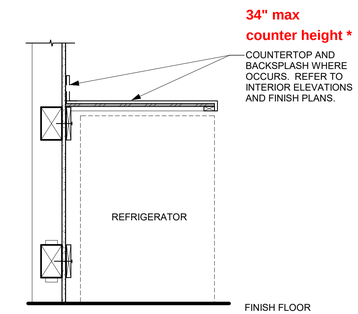

11 BASE CABINET REFRIGERATOR

A912 A906 SCALE: 1" = 1'-0"

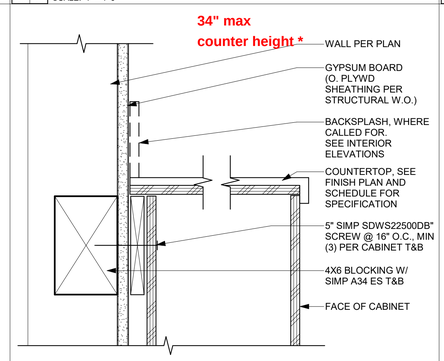

32 CASEWORK COUNTERTOP

A906 SCALE: 3" = 1'-0"

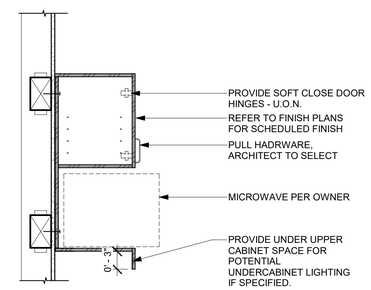

22 UPPER CABINET MICROWAVE

A912 A906 SCALE: 1" = 1'-0"

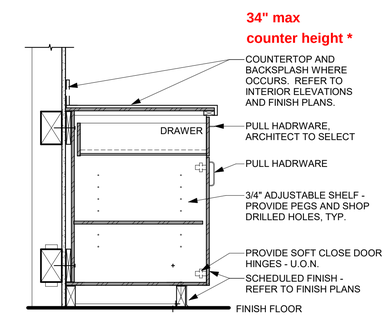

12 BASE CABINET WITH DOOR

A912 A906 SCALE: 1" = 1'-0"

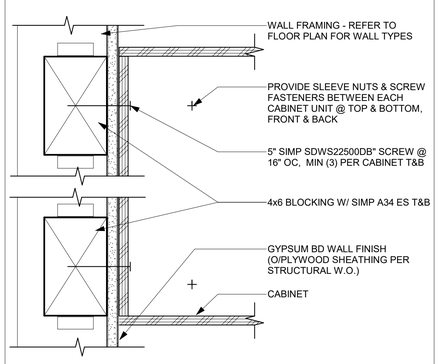

33 UPPER CABINET ANCHORAGE

A906 SCALE: 3" = 1'-0"

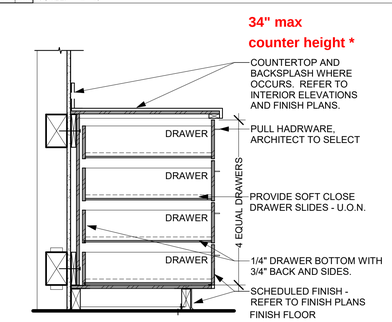

13 BASE CABINET WITH DRAWERS

A906 SCALE: 1" = 1'-0"

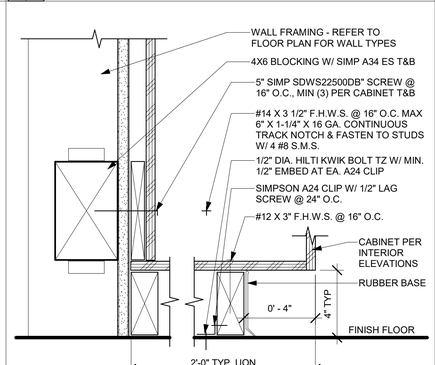

34 BASE CABINET ANCHORAGE

A906 SCALE: 3" = 1'-0"

rrm design group
rrmdesign.com | (805) 543-1794
3765 SOUTH HIGUERA STREET SUITE 102
SAN LUIS OBISPO, CA 93401

THE INCLUDED DRAWINGS, SPECIFICATIONS, IDEAS, DESIGNS AND ARRANGEMENTS REPRESENTED THEREBY ARE AND SHALL REMAIN THE PROPERTY OF RRM DESIGN GROUP AND NO PART THEREOF SHALL BE COPIED, DISCLOSED TO OTHERS OR SUBSTANTIALLY USED FOR ANY PURPOSE WHATSOEVER OTHER THAN THE PROJECT FOR WHICH THEY HAVE BEEN PREPARED AND DEVELOPED WITHOUT THE WRITTEN CONSENT OF RRM DESIGN GROUP. VISUAL CONTACT WITH THESE DRAWINGS OR SPECIFICATIONS SHALL CONSTITUTE CONCLUSIVE EVIDENCE OF ACCEPTANCE OF THESE RESTRICTIONS. SUBMITTAL OF PRELIMINARY DRAWINGS FOR REVIEW SHALL NOT BE CONSIDERED A WAIVER OF RRM DESIGN GROUP'S RIGHTS.
RRM DESIGN GROUP COPYRIGHT 2022
RRM IS A CALIFORNIA CORPORATION

LICENSED ARCHITECT
MICHELLE SCOTT LUCAS
C39678
10-31-25
RENEWAL DATE
STATE OF CALIFORNIA

CONSULTANT

AGENCY

FOURTH ST COMMUNITY CENTER AND PARK
HENDERSON AVE., PORTERVILLE, CA 93257
ARCHITECTURAL DETAILS - INTERIOR

NO.	REVISION	DATE
1	PLAN CHECK REVISION 1	05/17/24

PROJECT MANAGER TSL
DRAWN BY MC, NA, PM
CHECKED BY DD, KF
DATE 2024.09.17
PROJECT NUMBER 2883-01-RC22
SHEET A906

PLAN CHECK REVISION 2

9/20/2024 11:03:51 AM
Autodesk Docs://2883-01_Porterville Fourth St Community Center/2883-01-RC22_Porterville_v22.rvt

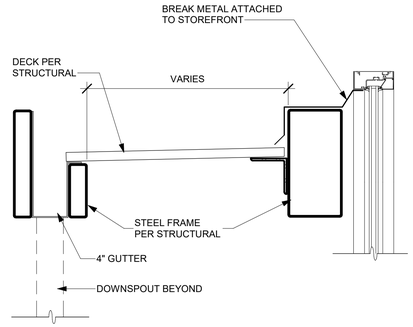

51 TRELLIS
A907 SCALE: 1 1/2" = 1'-0"

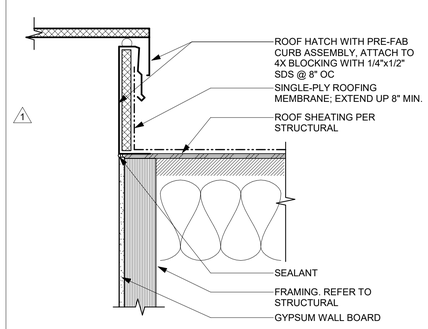

41 ROOF HATCH FLASHING
A907 A907 SCALE: 1 1/2" = 1'-0"

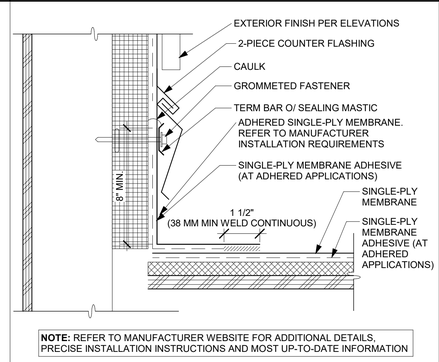

NOTE: REFER TO MANUFACTURER WEBSITE FOR ADDITIONAL DETAILS, PRECISE INSTALLATION INSTRUCTIONS AND MOST UP-TO-DATE INFORMATION

31 SIDEWALL
A411 A907 SCALE: 3" = 1'-0"

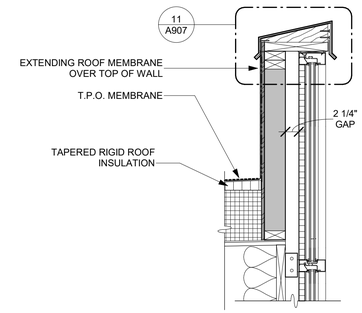

21 PARAPET @ STOREFRONT
A414 A907 SCALE: 1" = 1'-0"

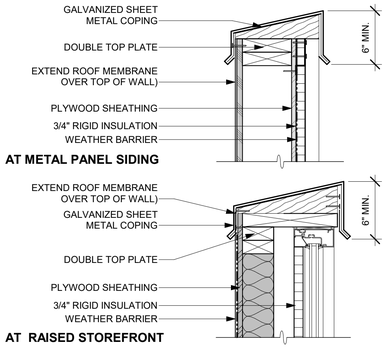

11 PARAPET CAPPING DETAIL
A907 A907 SCALE: 1 1/2" = 1'-0"

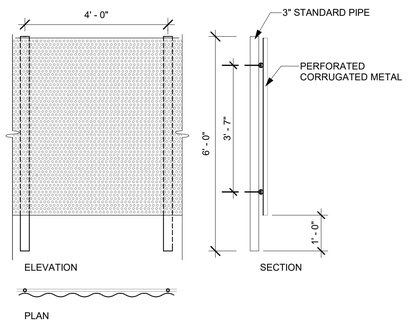

52 HVAC SCREENING - PERF. METAL
A505 A907 SCALE: 1/2" = 1'-0"

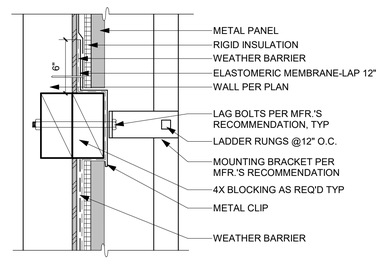

42 LADDER ATTACHMENT AT METAL PANEL
A907 A907 SCALE: 1 1/2" = 1'-0"

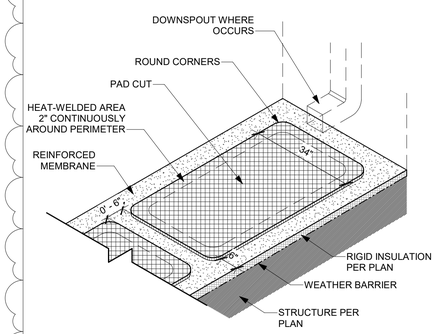

32 SINGLE PLY ROOFING DOUBLE PAD
A907 SCALE: 1/2" = 1'-0"

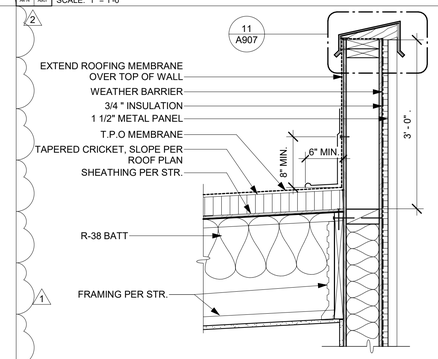

22 PARAPET @ METAL WALL PANEL 2
A321 A907 SCALE: 1" = 1'-0"

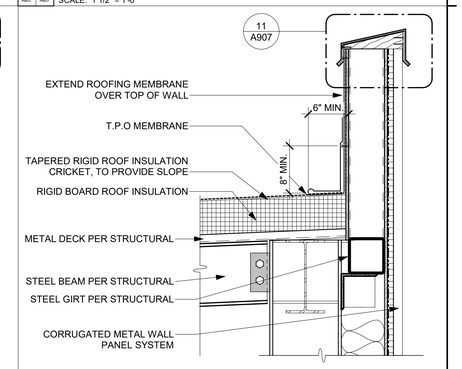

12 PARALLEL PARAPET DETAIL (GYM)
A321 A907 SCALE: 1" = 1'-0"

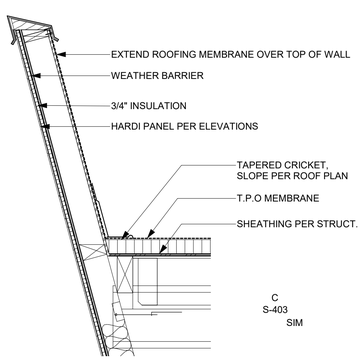

54 PARAPET ANGLED WALL
G414 A907 SCALE: 3/4" = 1'-0"

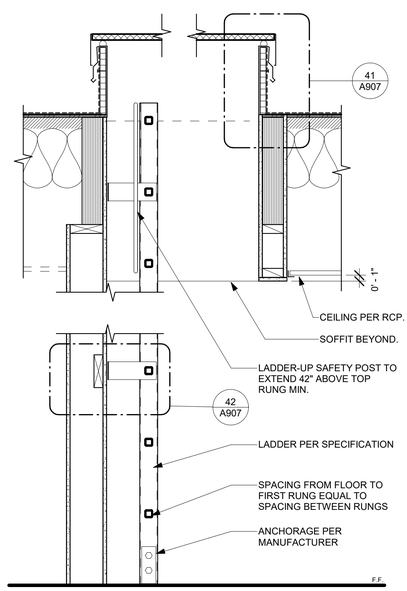

44 ROOF HATCH AND LADDER
A302 A907 SCALE: 1" = 1'-0"

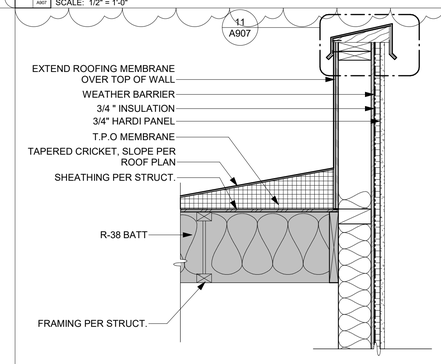

33 PARAPET SIDE DETAIL HARDI PANEL
A321 A907 SCALE: 1" = 1'-0"

23 PARAPET @KALWALL
A321 A907 SCALE: 1" = 1'-0"

13 PERPENDICULAR PARAPET DETAIL (GYM)
A321 A907 SCALE: 1" = 1'-0"

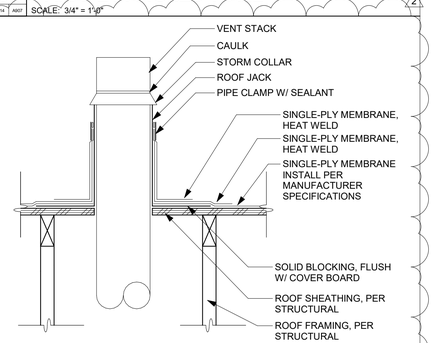

NOTE: REFER TO MANUFACTURER WEBSITE FOR ADDITIONAL DETAILS, PRECISE INSTALLATION INSTRUCTIONS AND MOST UP-TO-DATE INFORMATION

55 SINGLE-PLY - VENT PIPE
A907 NTS

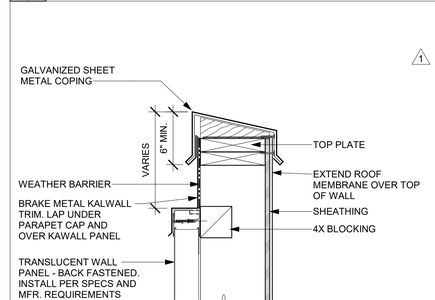

34 PARAPET CAPPING @ KALWALL
A907 A907 SCALE: 1 1/2" = 1'-0"

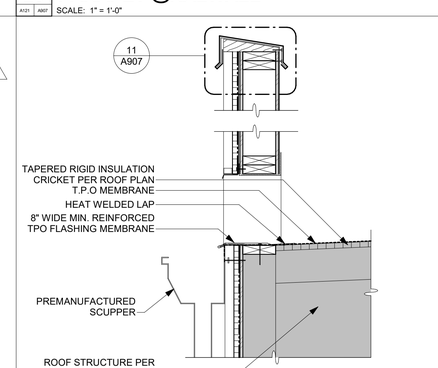

24 PARAPET GUTTER DETAIL
A321 A907 SCALE: 1" = 1'-0"

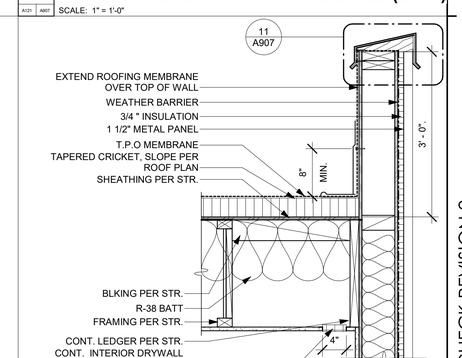

14 PARAPET @ METAL WALL PANEL 1
A321 A907 SCALE: 1" = 1'-0"

rrm design group
rrmdesign.com | (805) 543-1794
3765 SOUTH HIGUERA STREET SUITE 102
SAN LUIS OBISPO, CA 93401

THE INCLUDED DRAWINGS, SPECIFICATIONS, IDEAS, DESIGNS AND ARRANGEMENTS REPRESENTED THEREBY ARE AND SHALL REMAIN THE PROPERTY OF RRM DESIGN GROUP AND NO PART THEREOF SHALL BE COPIED, DISCLOSED TO OTHERS OR SUBSTANTIALLY USED FOR ANY PURPOSE WITHOUT THE PROPER WRITTEN CONSENT OF THE PROJECT FOR WHICH THEY HAVE BEEN PREPARED AND DEVELOPED WITHOUT THE WRITTEN CONSENT OF RRM DESIGN GROUP. VISUAL CONTACT WITH THESE DRAWINGS OR SPECIFICATIONS SHALL CONSTITUTE CONCLUSIVE EVIDENCE OF ACCEPTANCE OF THESE RESTRICTIONS. SUBMITTAL OF PRELIMINARY DRAWINGS FOR REVIEW SHALL NOT BE CONSIDERED A WAIVER OF RRM DESIGN GROUP'S RIGHTS.
RRM DESIGN GROUP COPYRIGHT 2022
RRM IS A CALIFORNIA CORPORATION

LICENSED ARCHITECT
JACQUELYN SCOTT LUPO
C 39878
10-31-25
RENEWAL DATE
STATE OF CALIFORNIA

CONSULTANT

AGENCY

FOURTH ST COMMUNITY CENTER AND PARK
HENDERSON AVE., PORTERVILLE, CA 93257

ARCHITECTURAL DETAILS - ROOF

NO.	REVISION	DATE
1	PLAN CHECK REVISION 1	05/17/24
2	PLAN CHECK REVISION 2	09/17/24

PROJECT MANAGER
TSL

DRAWN BY MC, NA, PM
CHECKED BY DD, KF

DATE
2024.09.17

PROJECT NUMBER
2883-01-RC22

SHEET
A907

PLAN CHECK REVISION 2

9/20/2024 11:03:53 AM
Autodesk Docs://2883-01_Porterville Fourth St Community Center/2883-01-RC22_Porterville_v22.rvt

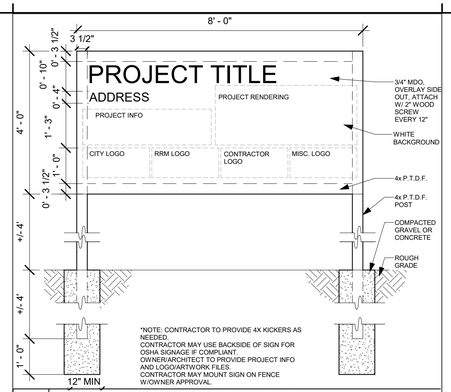

41 CONSTRUCTION PROJECT SIGN

A911 SCALE: 1/2" = 1'-0"

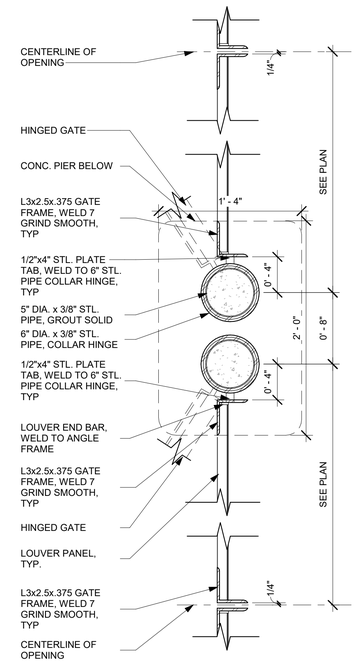

32 TRASH ENCLOSURE POST @ CENTER

A911 SCALE: 1 1/2" = 1'-0"

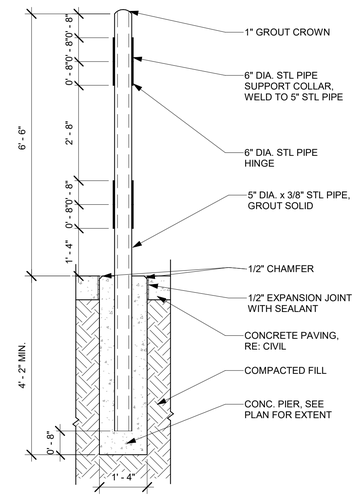

22 GATE SUPPORT POST SECTION

A911 SCALE: 1/2" = 1'-0"

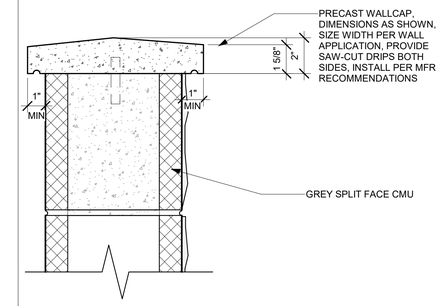

11 PRECAST CAP @ SITE WALL

A911 A911 SCALE: 3" = 1'-0"

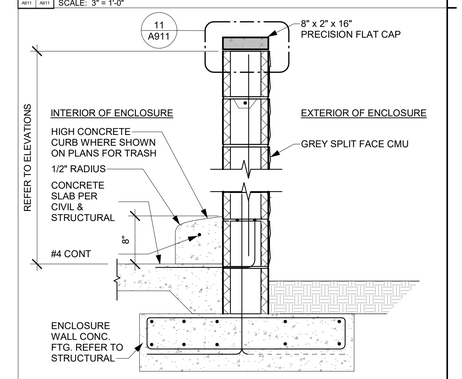

12 CMU ENCLOSURE/ SITE WALL

A0102 A911 SCALE: 1" = 1'-0"

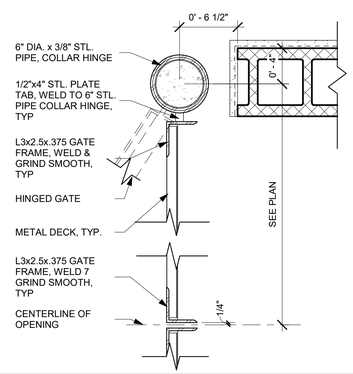

33 TRASH ENCLOSURE POST @ CORNER

A0102 A911 SCALE: 1 1/2" = 1'-0"

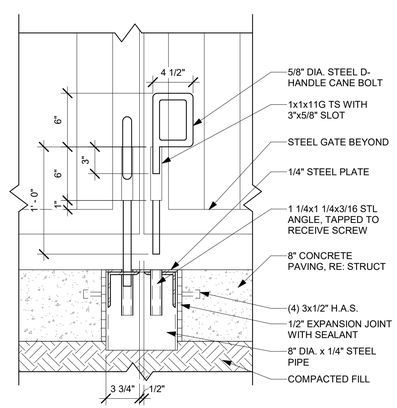

SECTION

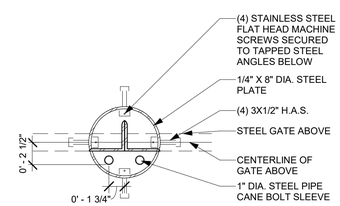

PLAN

24 CANE BOLT DETAIL

A0102 A911 SCALE: 1 1/2" = 1'-0"

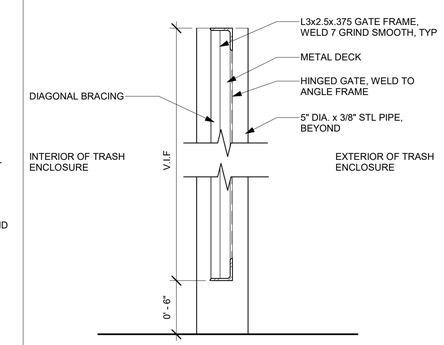

13 GATE SECTION

A911 SCALE: 1 1/2" = 1'-0"

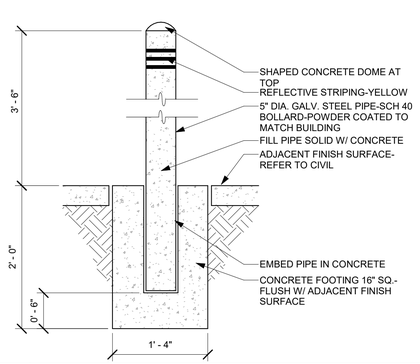

34 FIXED BOLLARD

A911 SCALE: 1" = 1'-0"

rrm design group
rrmdesign.com | (805) 543-1794
3765 SOUTH HIGUERA STREET SUITE 102
SAN LUIS OBISPO, CA 93401

THE INCLUDED DRAWINGS, SPECIFICATIONS, IDEAS, DESIGNS AND ARRANGEMENTS REPRESENTED THEREBY ARE AND SHALL REMAIN THE PROPERTY OF RRM DESIGN GROUP AND NO PART THEREOF SHALL BE COPIED, DISCLOSED TO OTHERS OR USED IN CONNECTION WITH ANY WORK OR PROJECT OTHER THAN THE SPECIFIED PROJECT FOR WHICH THEY HAVE BEEN PREPARED AND DEVELOPED WITHOUT THE WRITTEN CONSENT OF RRM DESIGN GROUP. VISUAL CONTACT WITH THESE DRAWINGS OR SPECIFICATIONS SHALL CONSTITUTE CONCLUSIVE EVIDENCE OF ACCEPTANCE OF THESE RESTRICTIONS. SUBMITTAL OF PRELIMINARY DRAWINGS FOR REVIEW SHALL NOT BE CONSIDERED A WAIVER OF RRM DESIGN GROUP'S RIGHTS.
RRM DESIGN GROUP COPYRIGHT 2022
RRM IS A CALIFORNIA CORPORATION

CONSULTANT

AGENCY

FOURTH ST COMMUNITY CENTER AND PARK

HENDERSON AVE., PORTERVILLE, CA 93257

ARCHITECTURAL DETAILS - SITE

NO.	REVISION	DATE

PLAN CHECK REVISION 2

PROJECT MANAGER TSL

DRAWN BY MC, NA, PM

CHECKED BY DD, KF

DATE 2024.09.17

PROJECT NUMBER 2883-01-RC22

SHEET A911

9/20/2024 11:03:53 AM
Autodesk Docs://2883-01_Porterville Fourth St Community Center/2883-01-RC22_Porterville_v22.rvt

41 **ROOF ASSEMBLY @ 2X6**
A921 SCALE: 1 1/2" = 1'-0"

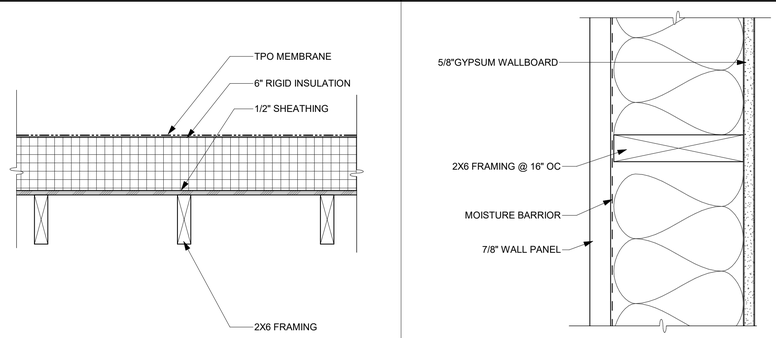

E **INTERIOR PARTITION WALL**
A921 SCALE: 3" = 1'-0"

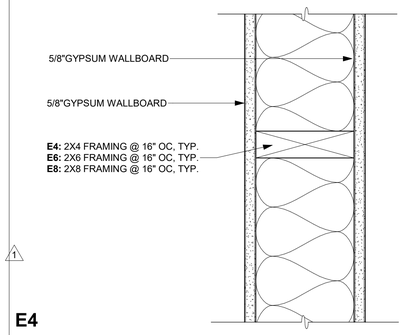

E4
E6

E8 **INTERIOR PARTITION WALL**
A921 SCALE: 3" = 1'-0"

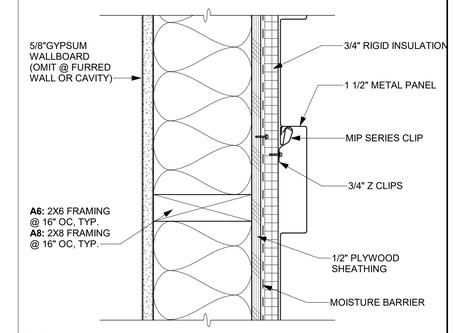

A6

A8 **EXTERIOR WALL - METAL PANEL**
A921 SCALE: 3" = 1'-0"

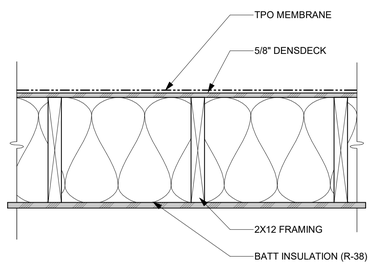

42 **ROOF ASSEMBLY @ 2X12**
A921 SCALE: 1 1/2" = 1'-0"

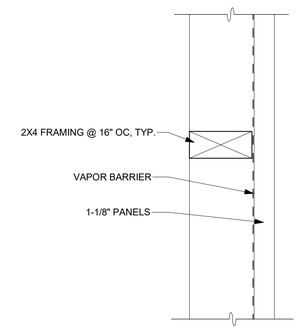

F **INTERIOR FURRED AT RACQUETBALL**
A921 SCALE: 3" = 1'-0"

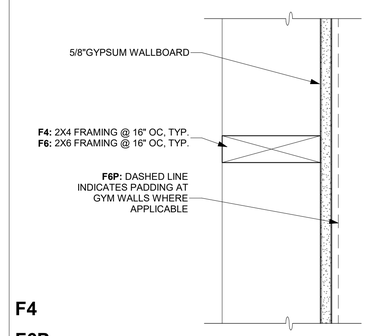

F4
F6P

F6 **INTERIOR FURRED**
A921 SCALE: 3" = 1'-0"

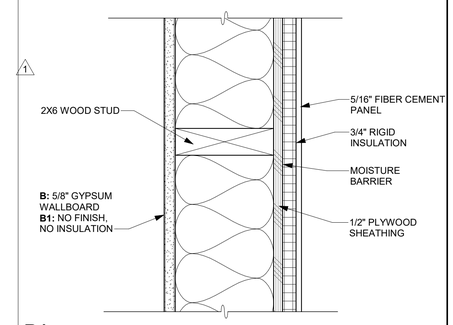

B1

B **EXTERIOR WALL - FIBER CEMENT - GYP**
A921 SCALE: 3" = 1'-0"

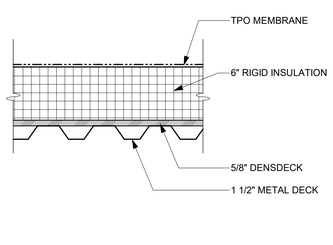

43 **GYM ROOF ASSEMBLY**
A921 SCALE: 1 1/2" = 1'-0"

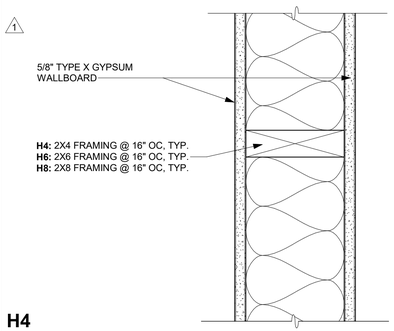

H4
H6

H **FIRE PARTITION WALL 1 HR**
A921 SCALE: 3" = 1'-0"

GA FILE NO. WP 3380 (1 HOUR), STC 53 PER CA OFFICE OF NOISE CONTROL ASSEMBLY NO. 1.2.3.5.4.3 **1 HOUR / 53 STC**

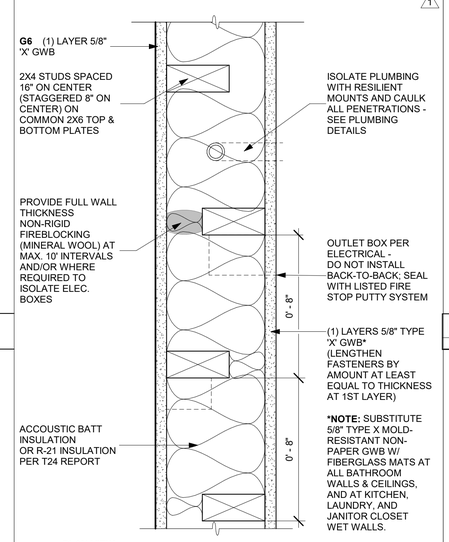

PLAN VIEW

GA FILE NO. WP3380
ONE LAYER 5/8" TYPE X GYPSUM WALLBOARD APPLIED PARALLEL OR AT RIGHT ANGLES TO EACH SIDE OF 2 X 4 WOOD STUDS 16" O.C. STAGGERED 8" O.C. ON 2 X 6 WOOD PLATES WITH 6D COATED NAILS, 1 7/8" LONG, 0.0915" SHANK, 1/4" HEADS, 7" O.C. JOINTS STAGGERED 24" ON OPPOSITE SIDES. HORIZONTAL BRACING REQUIRED AT MID-HEIGHT. (LOAD-BEARING)

NOTES:

1. REFER TO MECHANICAL, ELECTRICAL & PLUMBING DRAWINGS FOR ADDITIONAL FIRE-RESISTANT & ACOUSTIC REQUIREMENTS AT PENETRATIONS

2. KEYHOLES FOR CONDUIT SHALL BE CUT IN WOOD STUDS IN SIDE SERVED.

3. INSTALL RECESSED FIXTURES SUCH THAT FIRE RESISTANCE RATING IS NOT REDUCED.

G6 **PARTY WALL STAGGERED STUD**
A921 SCALE: 3" = 1'-0"

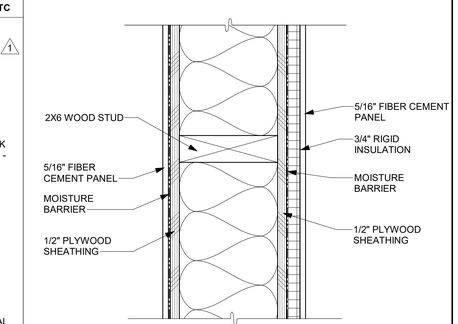

B2 **EXTERIOR WALL - FIBER CEMENT PANEL**
A921 SCALE: 3" = 1'-0"

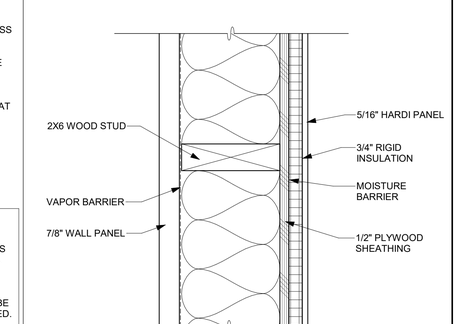

B3 **EXTERIOR WALL - FIBER CEMENT PANEL**
A921 SCALE: 3" = 1'-0"

rrm design group
rrmdesign.com | (805) 543-1794
3765 SOUTH HIGUERA STREET, SUITE 102
SAN LUIS OBISPO, CA 93401

THE INCLUDED DRAWINGS, SPECIFICATIONS, IDEAS, DESIGNS AND ARRANGEMENTS REPRESENTED THEREBY ARE AND SHALL REMAIN THE PROPERTY OF RRM DESIGN GROUP AND NO PART THEREOF SHALL BE COPIED, DISCLOSED TO OTHERS OR USED IN CONNECTION WITH ANY WORK OR PROJECT OTHER THAN THE SPECIFIED PROJECT FOR WHICH THEY HAVE BEEN PREPARED AND DEVELOPED WITHOUT THE WRITTEN CONSENT OF RRM DESIGN GROUP. VISUAL CONTACT WITH THESE DRAWINGS OR SPECIFICATIONS SHALL CONSTITUTE CONCLUSIVE EVIDENCE OF ACCEPTANCE OF THESE RESTRICTIONS. SUBMITTAL OF PROPOSALS OR QUOTATIONS FOR WORK THEREON SHALL BE DEEMED ACCEPTANCE OF WAIVER OF RRM DESIGN GROUP'S RIGHTS.
RRM DESIGN GROUP COPYRIGHT 2022
RRM IS A CALIFORNIA CORPORATION

CONSULTANT

AGENCY

FOURTH ST COMMUNITY CENTER AND PARK
HENDERSON AVE., PORTERVILLE, CA 93257
ARCHITECTURAL DETAILS - WALL TYPES

NO.	REVISION	DATE
1	PLAN CHECK REVISION 1	05/17/24

PROJECT MANAGER TSL
DRAWN BY MC, NA, PM
CHECKED BY DD, KF
DATE 2024.09.17
PROJECT NUMBER 2883-01-RC22
SHEET A921

PLAN CHECK REVISION 2

9/20/2024 11:03:54 AM
Autodesk Docs://2883-01_Porterville Fourth St Community Center/2883-01-RC22_Porterville_v22.rvt

THE SPOUT SHALL PROVIDE A FLOW OF WATER 2" HIGH MIN. AND SHALL BE LOCATED 5" MAX. FROM THE FRONT OF THE UNIT. THE ANGLE OF THE WATER STREAM SHALL BE MEASURED HORIZONTALLY RELATIVE TO THE FRONT FACE OF THE UNIT. WHERE SPOUTS ARE LOCATED LESS THAN 2 INCHES FROM THE FRONT OF THE UNIT, THE ANGLE OF THE WATER STREAM SHALL BE 30 DEGREES MAX. WHERE SPOUTS ARE LOCATED BETWEEN 3 INCHES AND 5 INCHES MAX. FROM THE FRONT ON THE UNIT THE ANGLE OF THE WATER STREAM SHALL BE 15 DEGREES MAX.

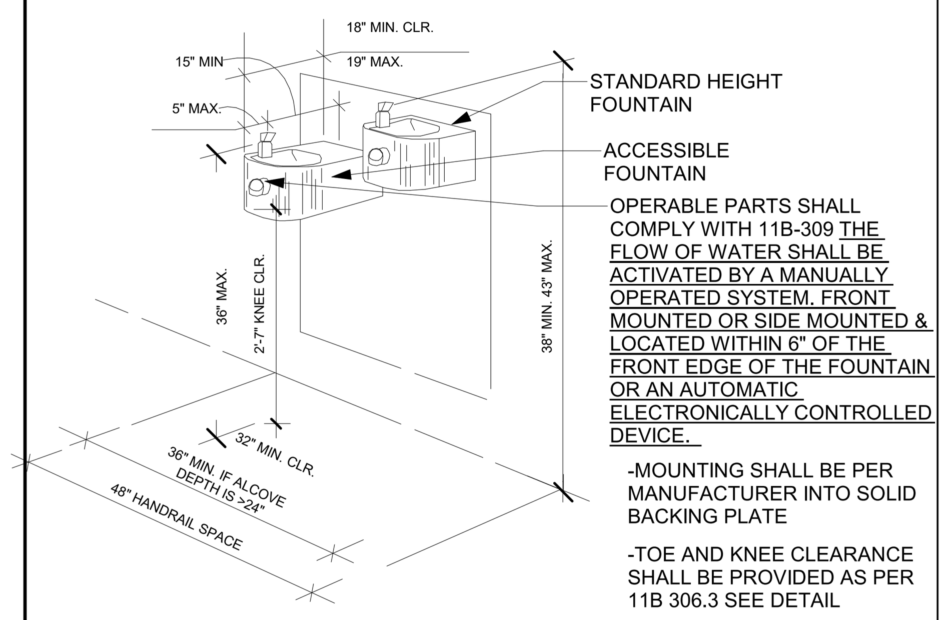

51 HI-LO DRINKING FOUNTAIN

SCALE: 3" = 1'-0" REF 11B 602

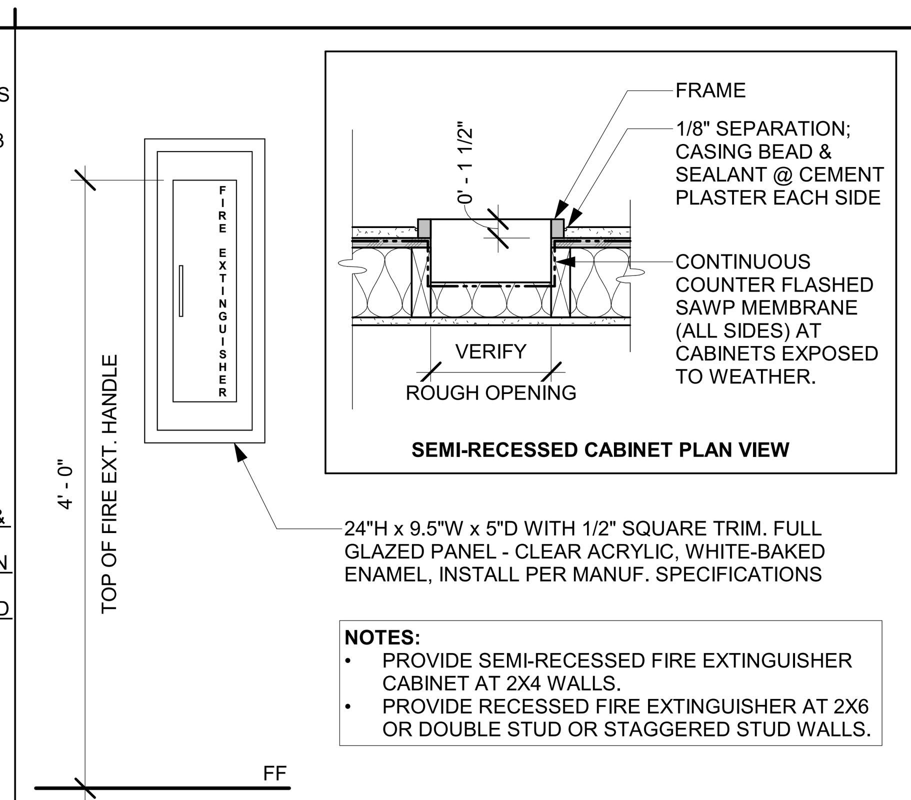

NOTES:
- PROVIDE SEMI-RECESSED FIRE EXTINGUISHER CABINET AT 2X4 WALLS.
- PROVIDE RECESSED FIRE EXTINGUISHER AT 2X6 OR DOUBLE STUD OR STAGGERED STUD WALLS.

41 ACC. FIRE EXTINGUISHER CABINET

NTS

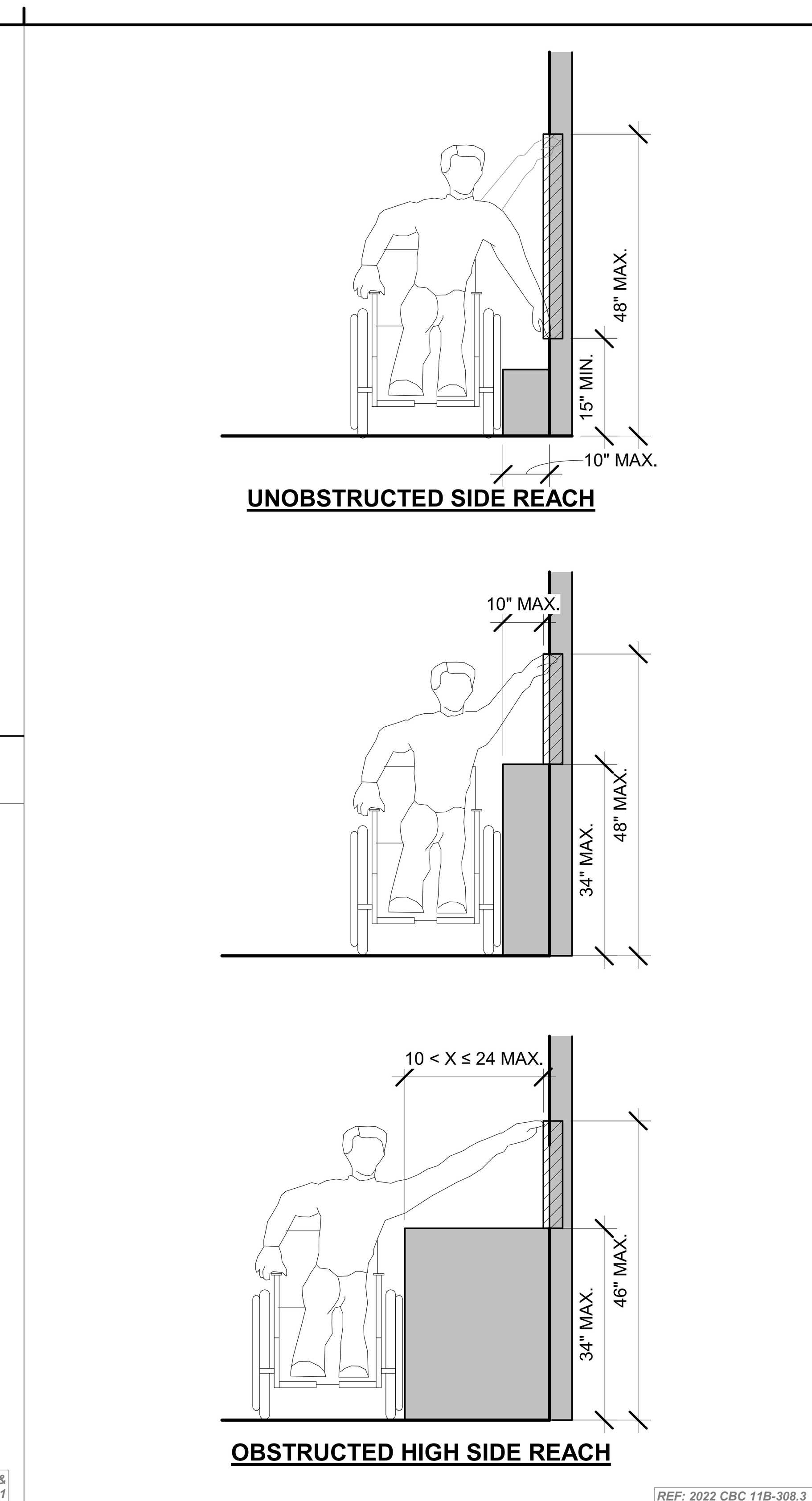

32 ACC. SIDE REACH

NTS

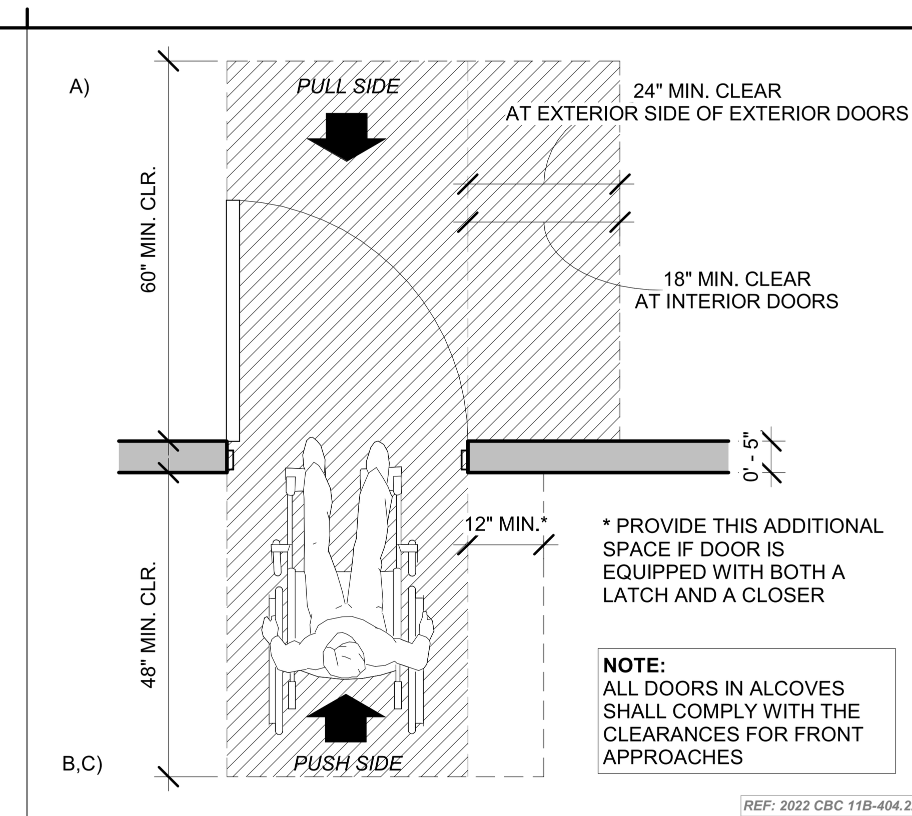

21 FRONT APPROACH CLEARANCES

SCALE: 1/2" = 1'-0"

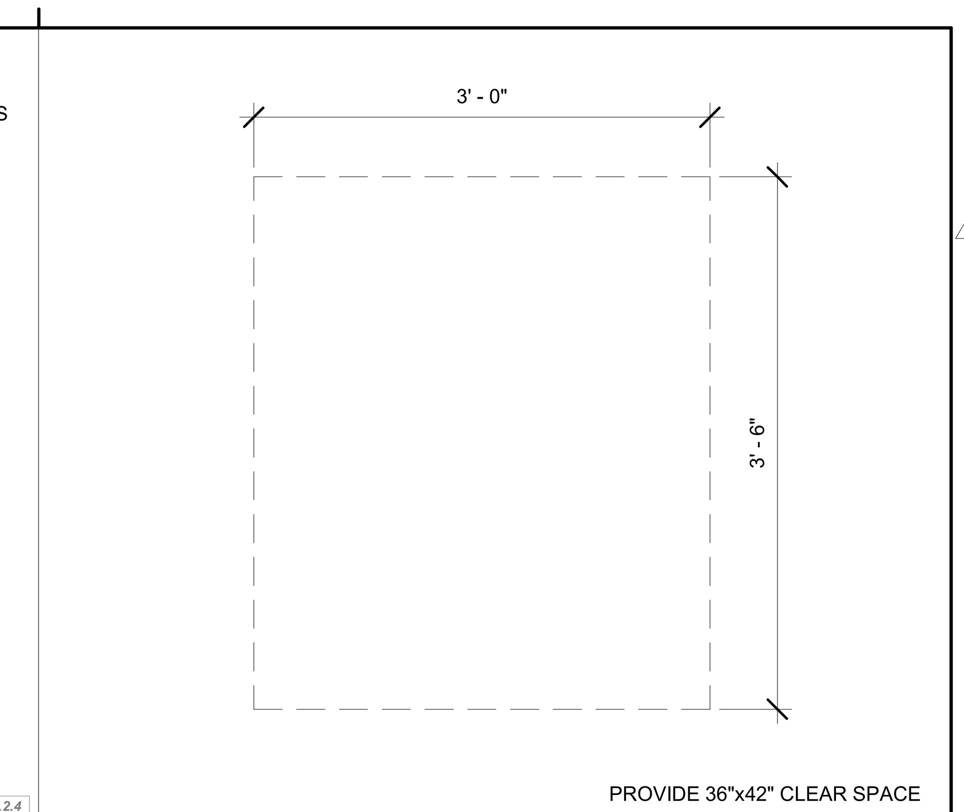

11 ACC. SEATING SPACE

SCALE: 1" = 1'-0"

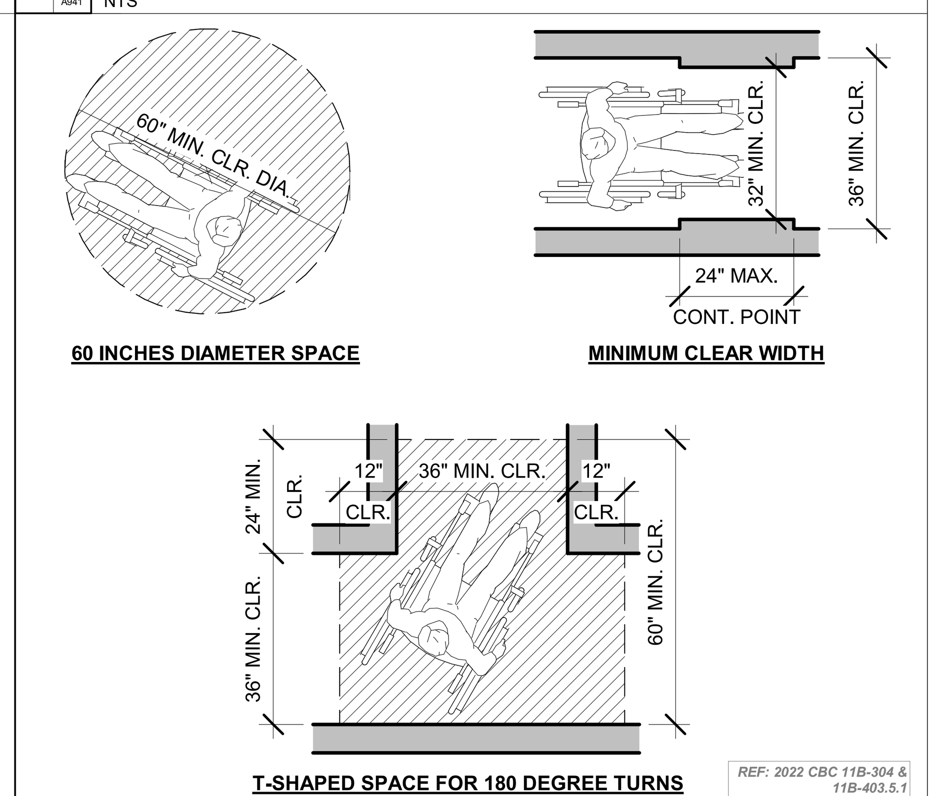

42 TURNING SPACE

SCALE: 3/8" = 1'-0"

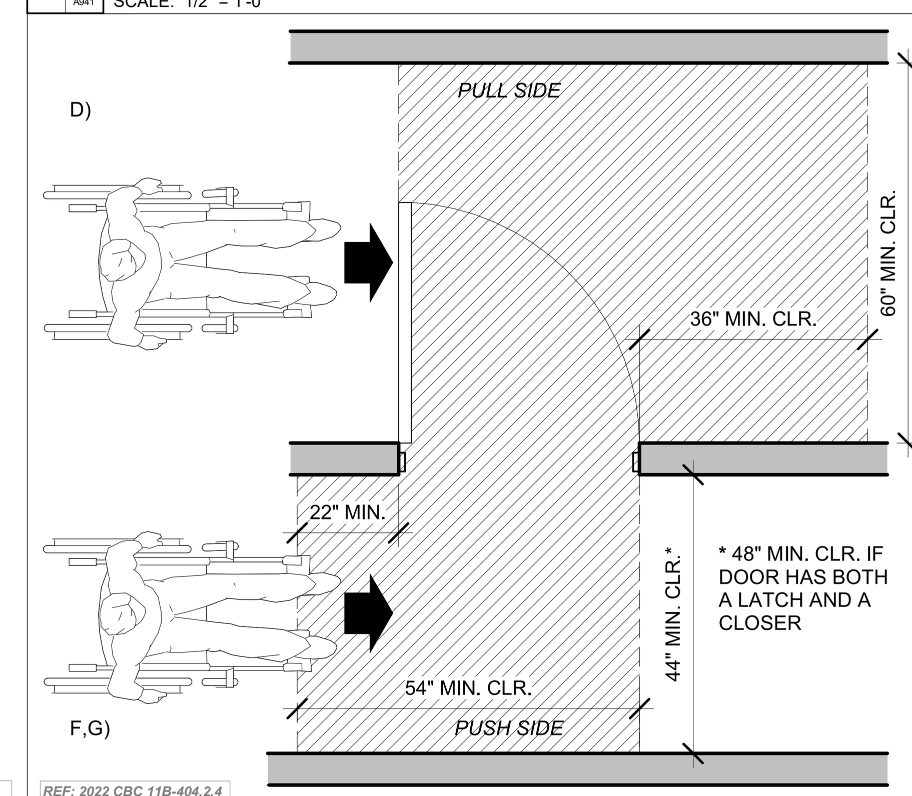

22 HINGE APPROACH CLEARANCES

SCALE: 1/2" = 1'-0"

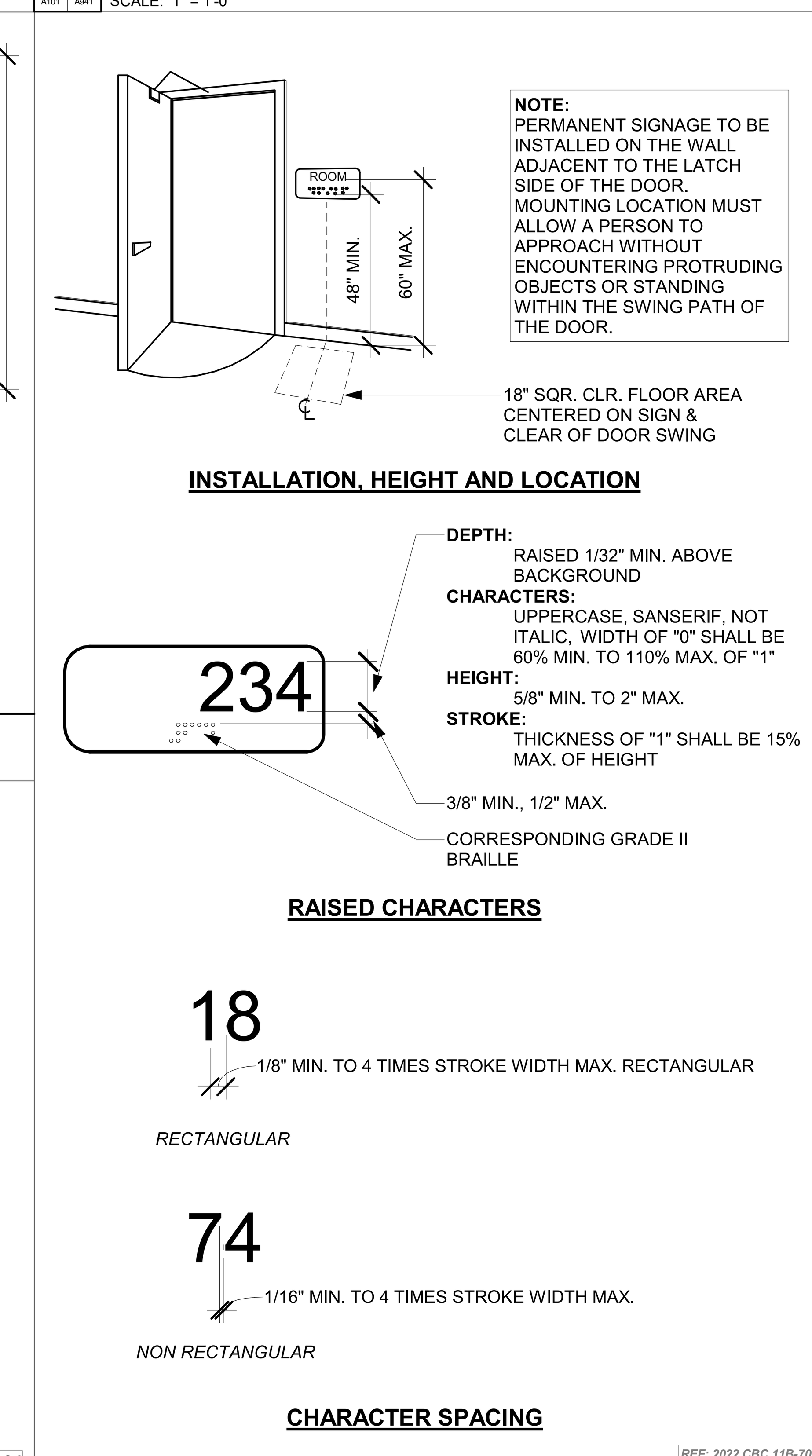

13 ACC. ROOM SIGNAGE

NTS

NOTE:
1. THE REQUIRED CLEAR FLOOR SPACE MAY NOT OVERLAP THE REQUIRED KNEE SPACE BY MORE THAN 19".
2. KNEE CLEARANCES AT TABLES, COUNTERS & WORKSURFACES IS AT LEAST 27" HIGH, 30" WIDE AND 19" DEEP.

REF: 2022 CBC 11B-306

43 TOE & KNEE CLEARANCES

SCALE: 3" = 1'-0"

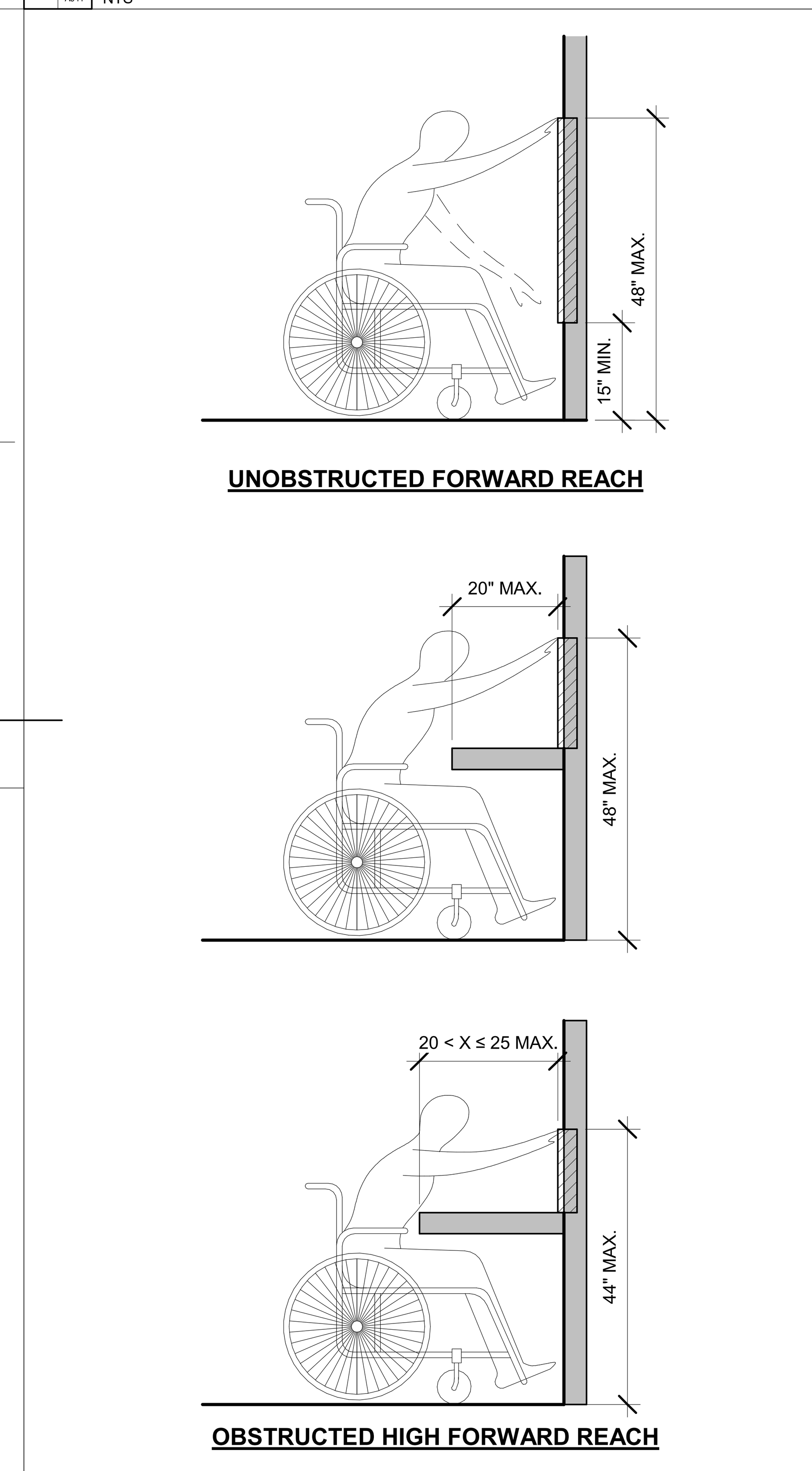

34 ACC. FORWARD REACH

NTS

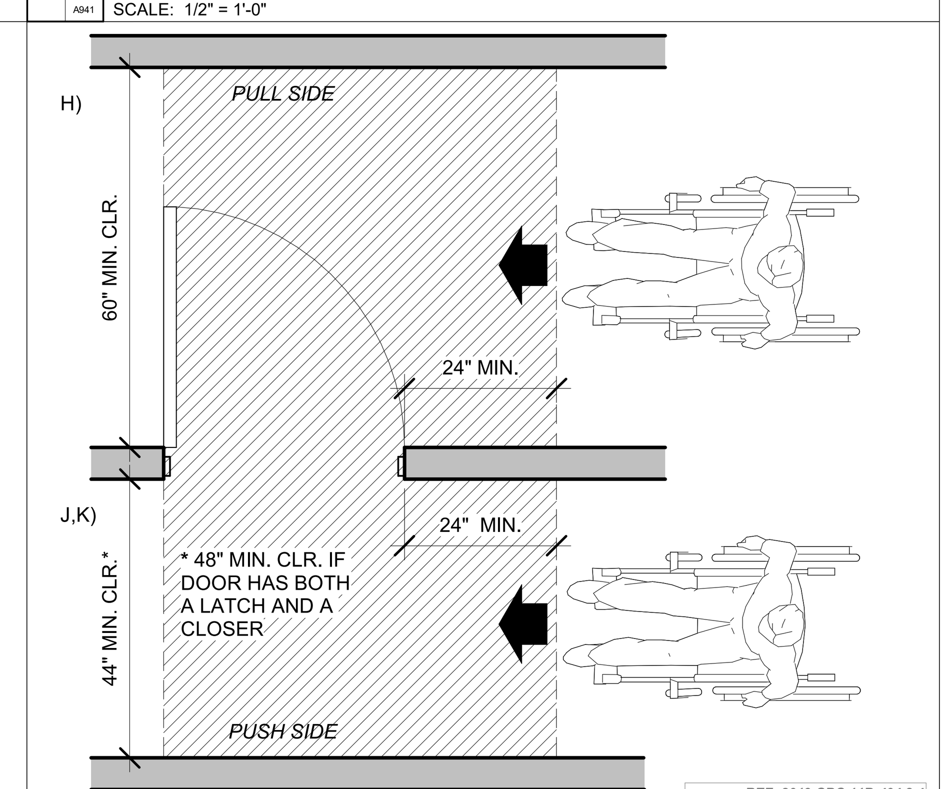

23 LATCH APPROACH CLEARANCES

SCALE: 1/2" = 1'-0"

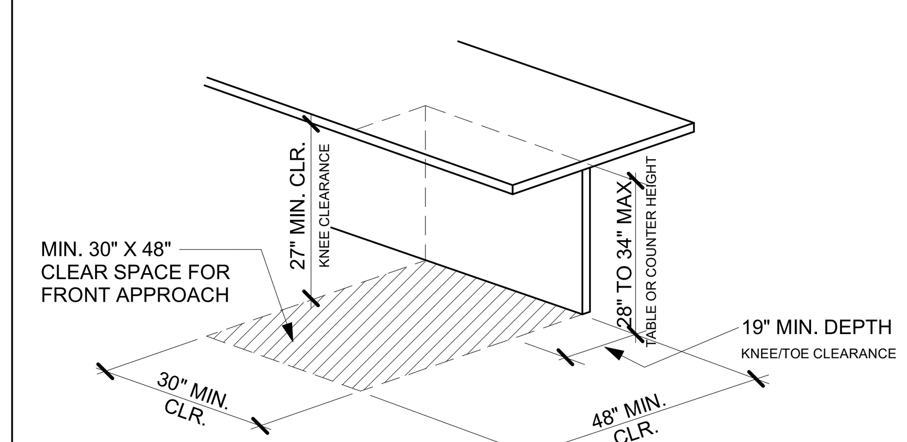

NOTE:
1. THE REQUIRED CLEAR FLOOR SPACE MAY NOT OVERLAP THE REQUIRED KNEE SPACE BY MORE THAN 19".
2. KNEE CLEARANCES AT TABLES, COUNTERS & WORKSURFACES IS AT LEAST 27" HIGH, 30" WIDE AND 19" DEEP.

44 COUNTERTOP CLEARANCES

SCALE: 3" = 1'-0"

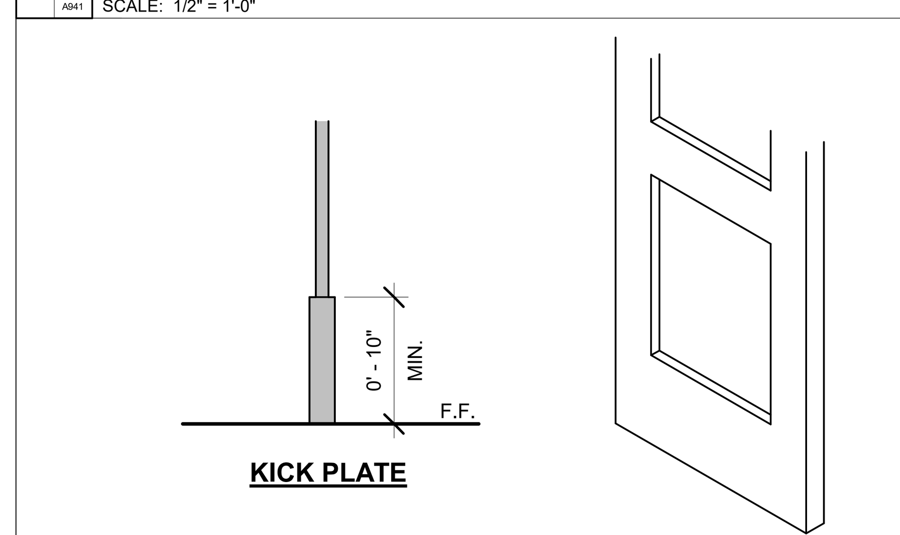

NOTE:
SWINGING DOOR & GATE SURFACES WITHIN 10" OF FINISH FLOOR SHALL HAVE A SMOOTH SURFACE OF THE PUSH SIDE EXTENDING THE FULL WIDTH OF DOOR OR GATE. PARTS CREATING HORIZONTAL OR VERTICAL JOINTS SHALL BE WITHIN 1/16" OF SURFACE & SHALL BE FREE OF SHARP OR ABRASIVE EDGES. CAVITIES CREATED BY KICK PLATES SHALL BE CAPPED.

REF: 2022 CBC 11B-404.2.10

24 ACC. DOOR KICK PLATE

NTS

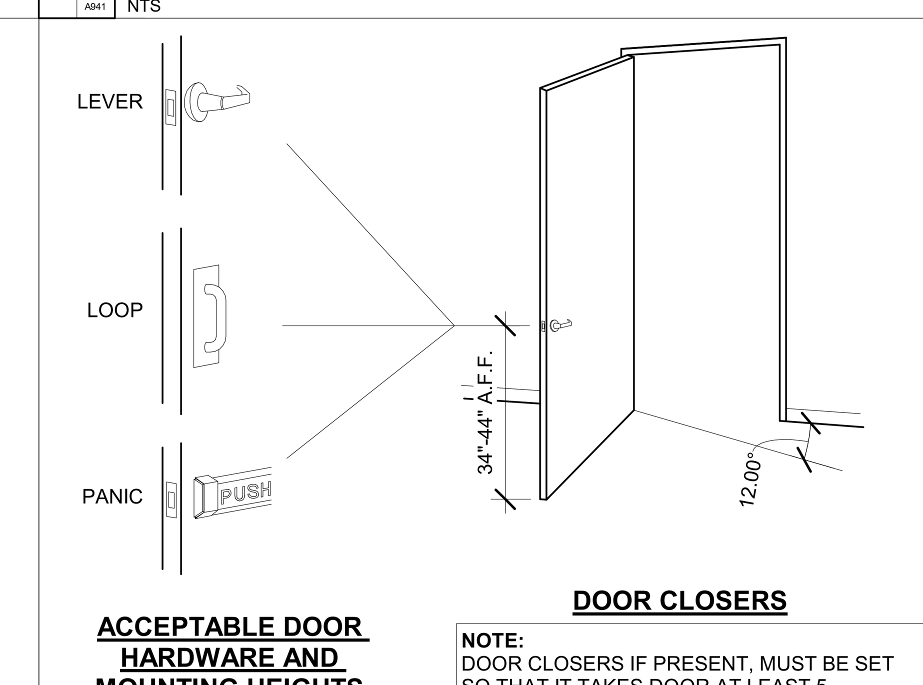

REF: 2022 CBC 11B-404.2

NOTE:
DOOR CLOSERS IF PRESENT, MUST BE SET SO THAT IT TAKES DOOR AT LEAST 5 SECONDS TO CLOSE FROM AN OPEN POSITION OF 90 DEGREES TO WITHIN 12° OF LATCH. THE FORCE TO OPEN DOOR SHALL NOT EXCEED 5 LBS. TYPICAL.

14 ACC. DOOR REQUIREMENTS

NTS

rrm design group
rrmdesign.com | (805) 543-1794
3765 SOUTH HIGUERA STREET, SUITE 102
SAN LUIS OBISPO, CA 93401

THE INCLUDED DRAWINGS, SPECIFICATIONS, IDEAS, DESIGNS AND ARRANGEMENTS REPRESENTED THEREBY ARE AND SHALL REMAIN THE PROPERTY OF RRM DESIGN GROUP AND NO PART THEREOF SHALL BE COPIED, DISCLOSED TO OTHERS OR USED IN CONNECTION WITH ANY WORK OR PROJECT OTHER THAN THE SPECIFIED PROJECT FOR WHICH THEY HAVE BEEN PREPARED AND DEVELOPED WITHOUT THE WRITTEN CONSENT OF RRM DESIGN GROUP. VISUAL CONTACT WITH THESE DRAWINGS OR SPECIFICATIONS SHALL CONSTITUTE CONCLUSIVE EVIDENCE OF ACCEPTANCE OF THESE RESTRICTIONS. SUBMITTAL OF THESE DOCUMENTS FOR PUBLIC AGENCY REVIEW SHALL NOT BE CONSIDERED A WAIVER OF RRM DESIGN GROUP'S RIGHTS.
RRM DESIGN GROUP COPYRIGHT 2022
RRM IS A CALIFORNIA CORPORATION

LICENSED ARCHITECT THADDEUS SCOTT LUPTON C39678 10-31-25 RENEWAL DATE STATE OF CALIFORNIA

CONSULTANT

AGENCY

FOURTH ST COMMUNITY CENTER AND PARK

HENDERSON AVE., PORTERVILLE, CA 93257

ACCESSIBILITIY DETAILS - CLEARANCES

NO.	REVISION	DATE
1	PLAN CHECK REVISION 1	05/17/24

PROJECT MANAGER: TSL
DRAWN BY: MC, NA, PM
CHECKED BY: DD, KF
DATE: 2024.09.17
PROJECT NUMBER: 2883-01-RC22
SHEET: A941

PLAN CHECK REVISION 2

9/20/2024 11:03:55 AM
Autodesk Docs://2883-01_Porterville Fourth St Community Center/2883-01-RC22_Porterville_v22.rvt

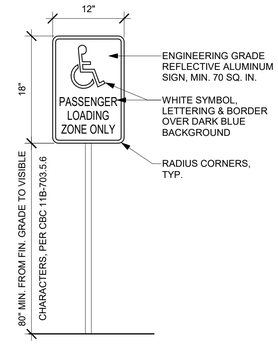

31 ACC. LOADING ZONE SIGN

A942 SCALE: 1" = 1'-0"

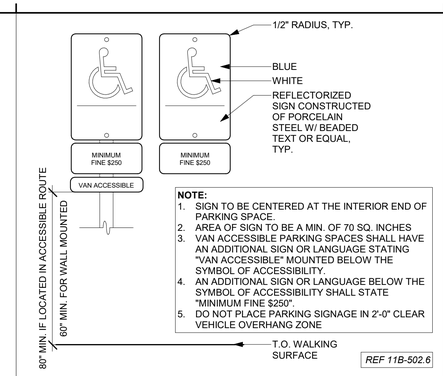

NOTE:
1. SIGN TO BE CENTERED AT THE INTERIOR END OF PARKING SPACE.
2. AREA OF SIGN TO BE A MIN. OF 70 SQ. INCHES
3. VAN ACCESSIBLE PARKING SPACES SHALL HAVE AN ADDITIONAL SIGN OR LANGUAGE STATING "VAN ACCESSIBLE" MOUNTED BELOW THE SYMBOL OF ACCESSIBILITY.
4. AN ADDITIONAL SIGN OR LANGUAGE BELOW THE SYMBOL OF ACCESSIBILITY SHALL STATE "MINIMUM FINE $250".
5. DO NOT PLACE PARKING SIGNAGE IN 2'-0" CLEAR VEHICLE OVERHANG ZONE

REF 11B-502.6

21 ACC. PARKING STALL SIGN

A942 SCALE: 3/4" = 1'-0"

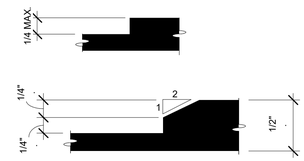

CHANGES IN LEVEL

REF. 11B-403.4

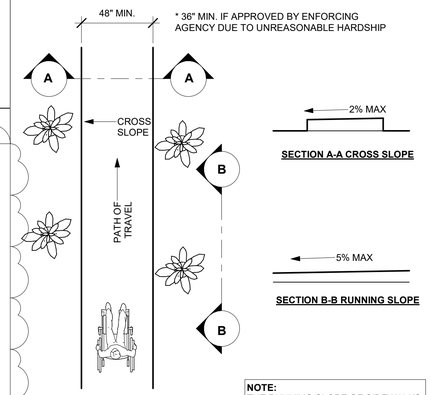

NOTE:
THE RUNNING SLOPE OF SIDEWALKS SHALL NOT EXCEED THE GENERAL GRADE ESTABLISHED FOR THE ADJACENT STREET

ALLOWABLE SLOPE AND CROSS SLOPE

REF 2022 CBC 11B-403.3

12 ACC. WALKS AND SIDEWALKS

A942 SCALE: 1/4" = 1'-0"

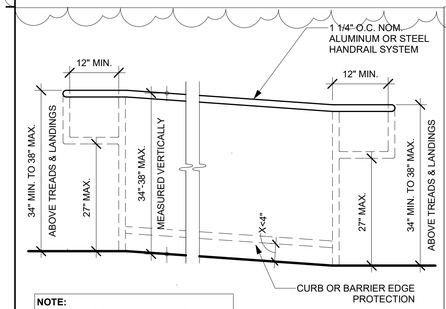

NOTE:
EXTENSIONS SHALL RETURN TO A WALL, GUARD, OR THE LANDING SURFACE, OR SHALL BE CONTINUOUS TO THE HANDRAIL OF AN ADJACENT RAMP RUN.

REF: 2022 CBC 11B-505.10

52 ACC-RAMP HANDRAIL

A942 SCALE: 3/4" = 1'-0"

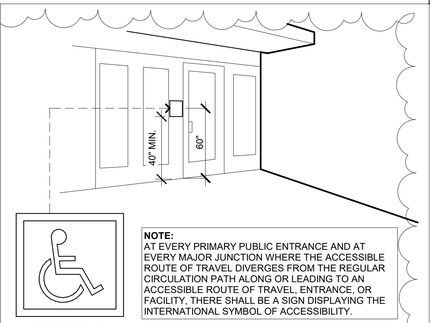

NOTE:
AT EVERY PRIMARY PUBLIC ENTRANCE AND AT EVERY MAJOR JUNCTION WHERE THE ACCESSIBLE ROUTE OF TRAVEL DIVERGES FROM THE REGULAR CIRCULATION PATH ALONG OR LEADING TO AN ACCESSIBLE ROUTE OF TRAVEL, ENTRANCE, OR FACILITY, THERE SHALL BE A SIGN DISPLAYING THE INTERNATIONAL SYMBOL OF ACCESSIBILITY.

REF: 2022 CBC 11B-216.6

42 ACC. BLDG. ENTRY SIGNAGE

A942 NTS

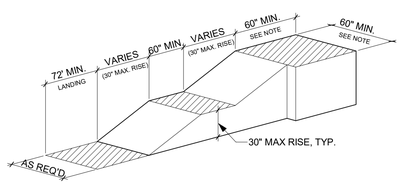

STRAIGHT RAMP RUN

NOTE:
1. WHEN DOOR SWINGS ONTO LANDING PROVIDE DOOR WIDTH PLUS 42" MIN.
2. ALL RAMPS MUST MEET HANDRAIL & CURB REQUIREMENTS. SEE 52/A942 ACCESSIBLE RAMP HANDRAIL.

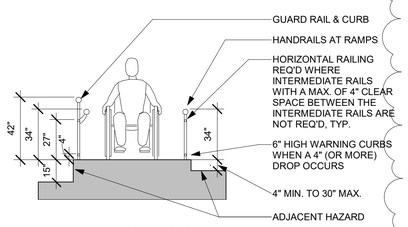

RAMP SECTION

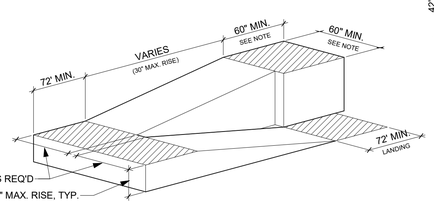

RAMP WITH INTERMEDIATE SWITCH-BACK PLATFORM

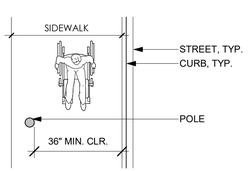

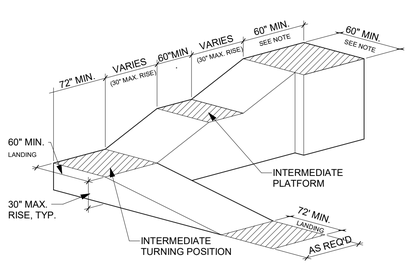

RAMP WITH TURNING PLATFORM

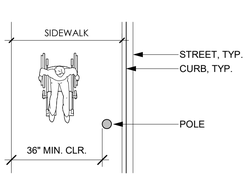

SIDEWALK CURBS

REF: 2022 CBC 11B-405

54 ACCESSIBLE RAMP DETAILS

A942 SCALE: 1/4" = 1'-0"

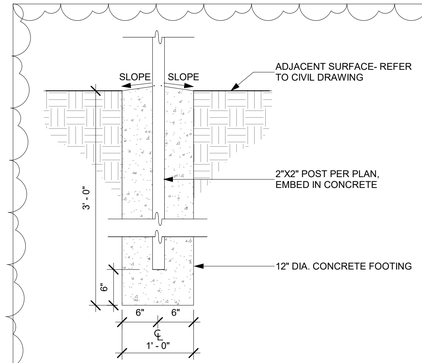

23 SIGN POST FOOTING

A942 SCALE: 1" = 1'-0"

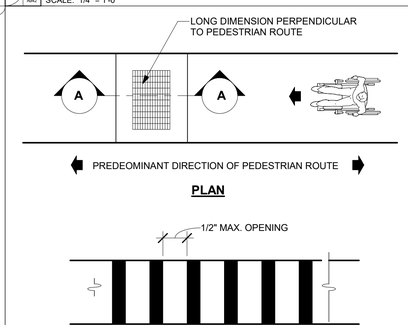

REF 2022 CBC 11B-302.3

13 ACC. GRATES

A942 SCALE: 1/4" = 1'-0"

rrm design group
rrmdesign.com | (805) 543-1794
3765 SOUTH HIGUERA STREET SUITE 102
SAN LUIS OBISPO, CA 93401

THE INCLUDED DRAWINGS, SPECIFICATIONS, IDEAS, DESIGNS AND ARRANGEMENTS REPRESENTED THEREBY ARE AND SHALL REMAIN THE PROPERTY OF RRM DESIGN GROUP AND NO PART THEREOF SHALL BE COPIED, DISCLOSED TO OTHERS OR USED IN CONNECTION WITH ANY WORK OR PROJECT OTHER THAN THE SPECIFIED PROJECT FOR WHICH THEY HAVE BEEN PREPARED AND DEVELOPED WITHOUT THE WRITTEN CONSENT OF RRM DESIGN GROUP. VISUAL CONTACT WITH THESE DRAWINGS OR SPECIFICATIONS SHALL CONSTITUTE CONCLUSIVE EVIDENCE OF ACCEPTANCE OF THESE RESTRICTIONS. SUBMITTAL OF PRELIMINARY DRAWINGS FOR REVIEW SHALL NOT BE CONSIDERED A WAIVER OF RRM DESIGN GROUP'S RIGHTS.
RRM DESIGN GROUP COPYRIGHT 2022
RRM IS A CALIFORNIA CORPORATION

LICENSED ARCHITECT
MICHAELE SCOTT LUPO
C39678
10-31-25
RENEWAL DATE
STATE OF CALIFORNIA

CONSULTANT

AGENCY

FOURTH ST COMMUNITY CENTER AND PARK
HENDERSON AVE., PORTERVILLE, CA 93257

ACCESSIBILITY DETAILS - SITE

NO.	REVISION	DATE
2	PLAN CHECK REVISION 2	09/17/24

PROJECT MANAGER: TSL
DRAWN BY: MC, NA, PM
CHECKED BY: DD, KF
DATE: 2024.09.17
PROJECT NUMBER: 2883-01-RC22
SHEET: A942

PLAN CHECK REVISION 2

9/20/2024 11:03:56 AM
Autodesk Docs://2883-01_Porterville Fourth St Community Center/2883-01-RC22_Porterville_v22.rvt

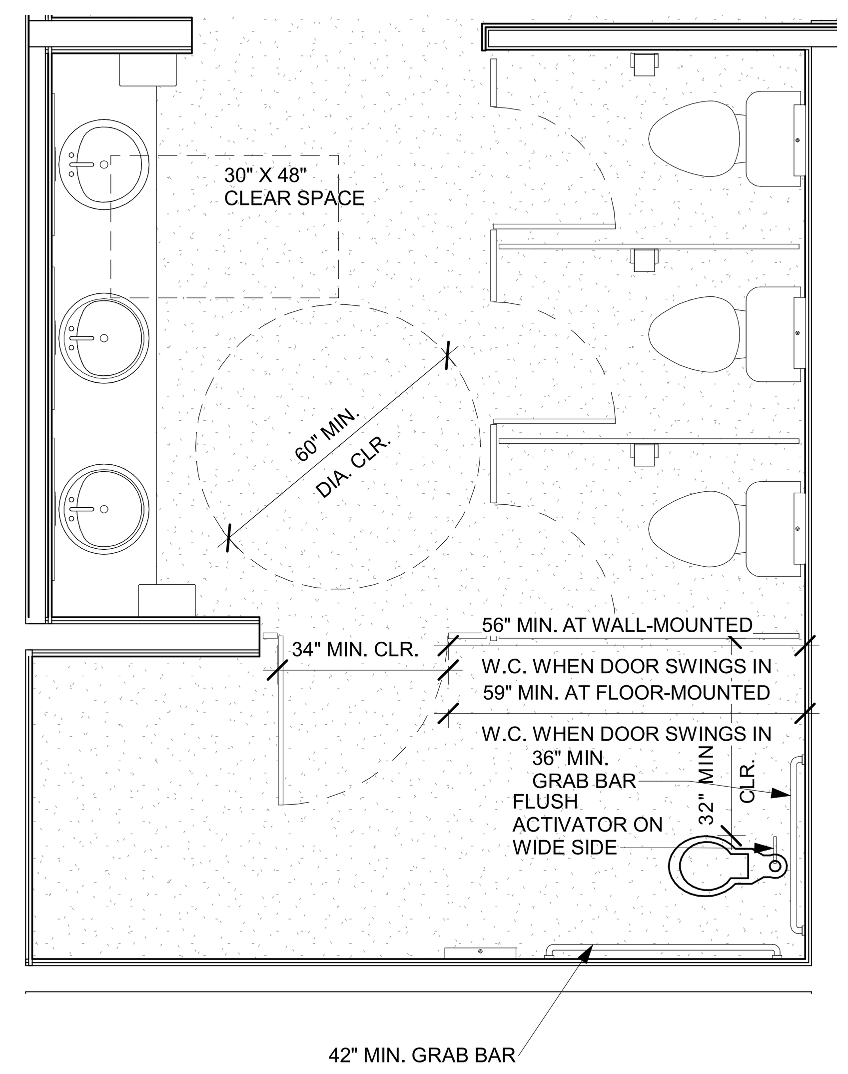

52 MULTIPLE ACCOMODATION TOILET
A101 A944 SCALE: 3/8" = 1'-0"

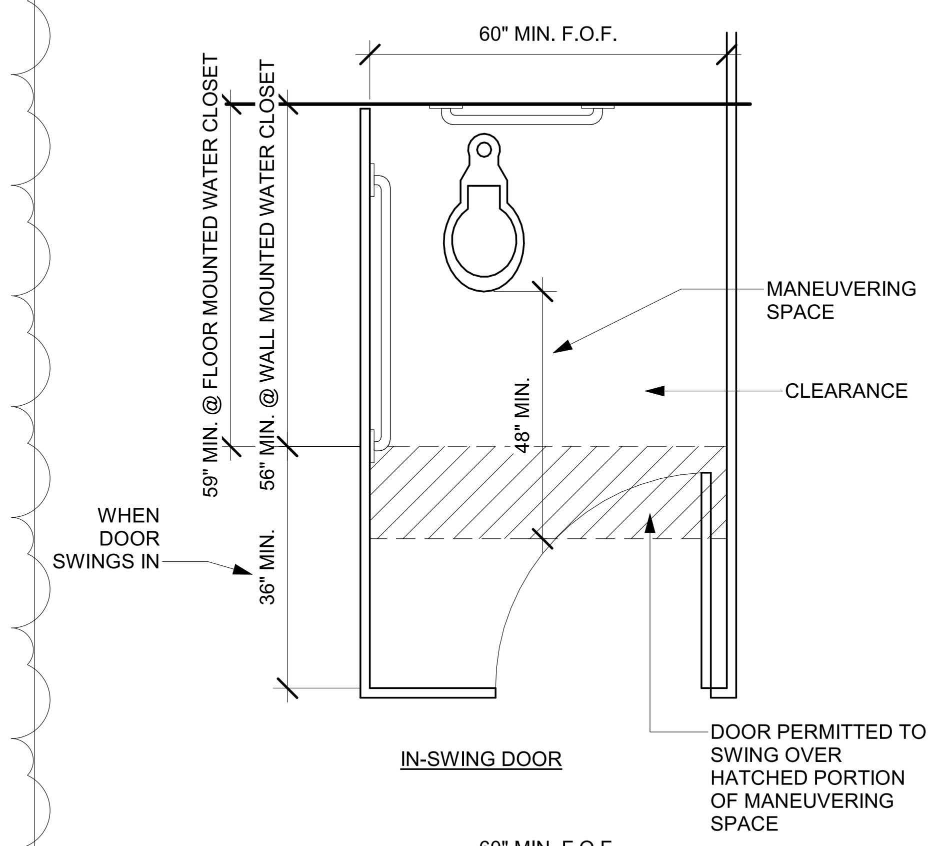

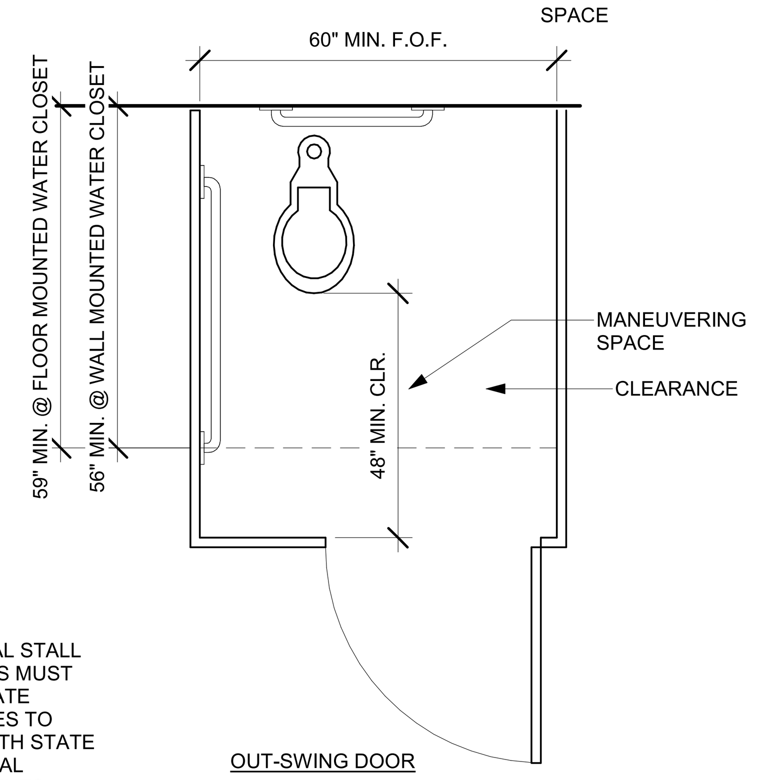

NOTE: TOTAL STALL DIMENSIONS MUST INCORPORATE CLEARANCES TO COMPLY WITH STATE AND FEDERAL REQUIREMENTS

42 ACC. TOILET STALL - END OPG DR 1B-604.8.1.1.3
A944 SCALE: 1/2" = 1'-0"

NOTE:
1. ALL DIMENSIONS FOR THIS DETAIL ARE FROM FACE OF FINISHED SURFACE
2. LOCATE CONTROLS AT TRANSFER SIDE OF FIXTURE.
3. WATER CLOSET FLUSH VALVE CONTROLS, OPERATING MECHANISM CONTROLS SHALL BE OPERABLE WITH ONE HAND, SHALL NOT REQUIRE TIGHT GRASPING, PINCHING, OR TWISTING OF THE WRIST, AND SHALL BE MOUNTED NO MORE THAN 44" A.F.F.
4. THE FORCE REQUIRED TO ACTIVATE THE WATER CLOSET AND URINAL FLUSH VALVE CONTROLS & FAUCET AND OPERATING MECHANISM CONTROLS SHALL BE NO GREATER THAN 5 LBF. ELECTRONIC OR AUTOMATIC FLUSHING CONTROLS ARE ACCEPTABLE AND PREFERABLE.
5. WHERE TANK TYPE TOILET IS USED WHICH OBSTRUCTS PLACEMENT AT 33", THE GRAB BAR MAY BE AS HIGH AS 36" MAINTAINING 1 1/2" CLEAR TO TANK.

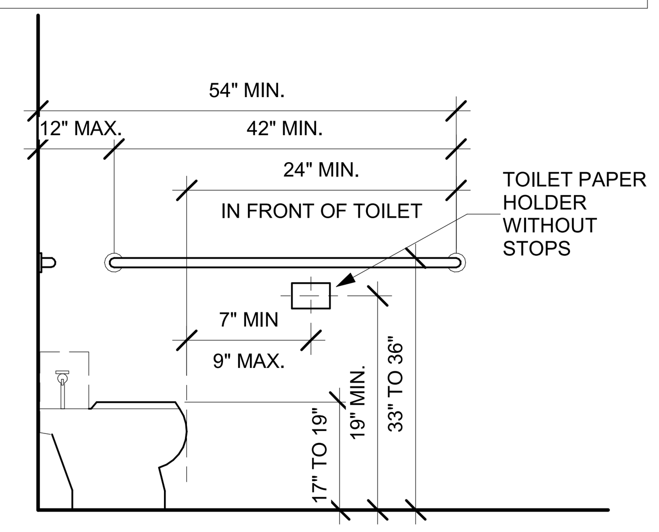

SIDE GRAB BAR

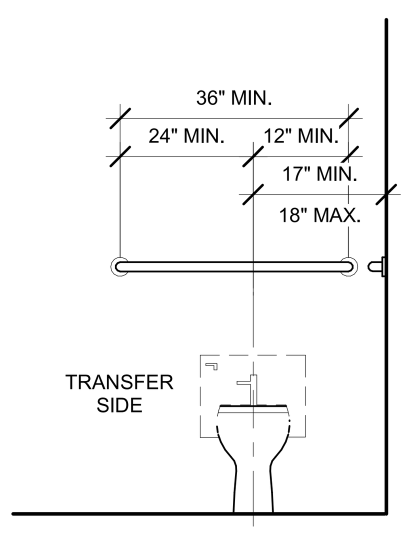

REAR GRAB BAR

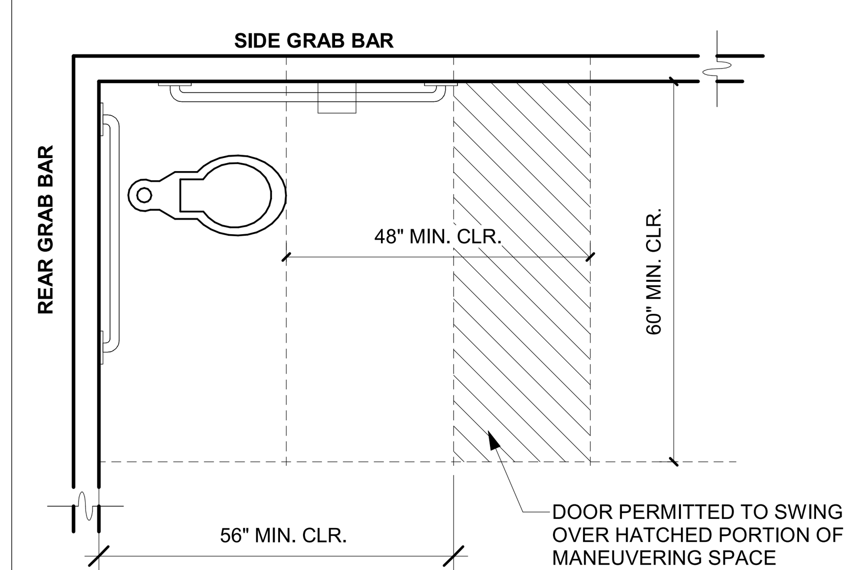

ACCESSIBLE WATER CLOSET CLEARANCE

REF 2022 CBC 11B-604

33 ACC. TYPICAL TOILET REQUIREMENTS
A944 SCALE: 1/2" = 1'-0"

NOTE:
1. ALL DIMENSIONS FOR THIS DETAIL ARE FROM FACE OF FINISHED SURFACE
2. TOTAL STALL DIMENSIONS MUST INCORPORATE CLEARANCES TO COMPLY WITH STATE AND FEDERAL REQUIREMENTS.
3. LOCATE CONTROLS AT TRANSFER SIDE OF FIXTURE.
4. PROVIDE PRIVACY LOCK, MUST COMPLY WITH ***2022 CBC 11B-205.***
5. REFER TO DETAIL FOR DOOR SIGNAGE REQUIREMENTS.

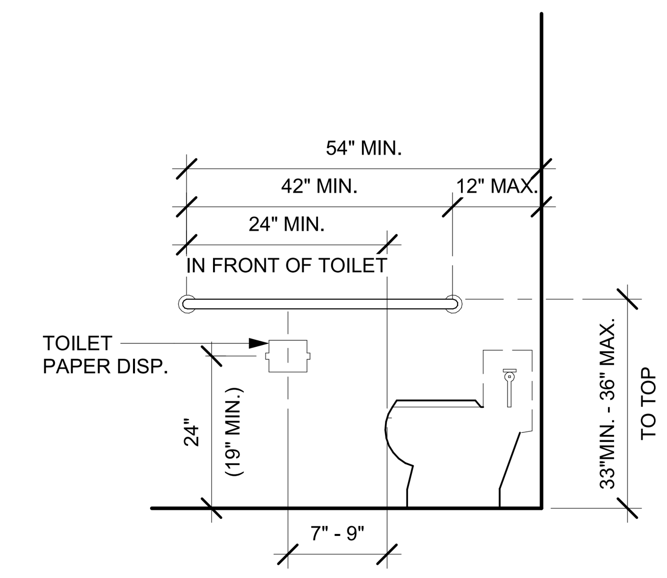

SIDE GRAB BAR

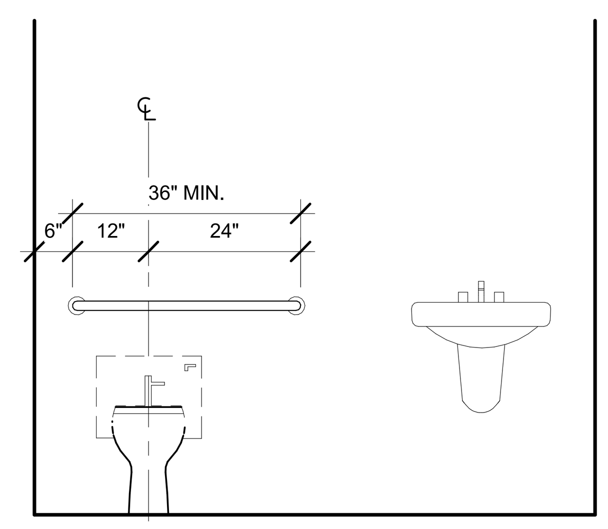

REAR GRAB BAR

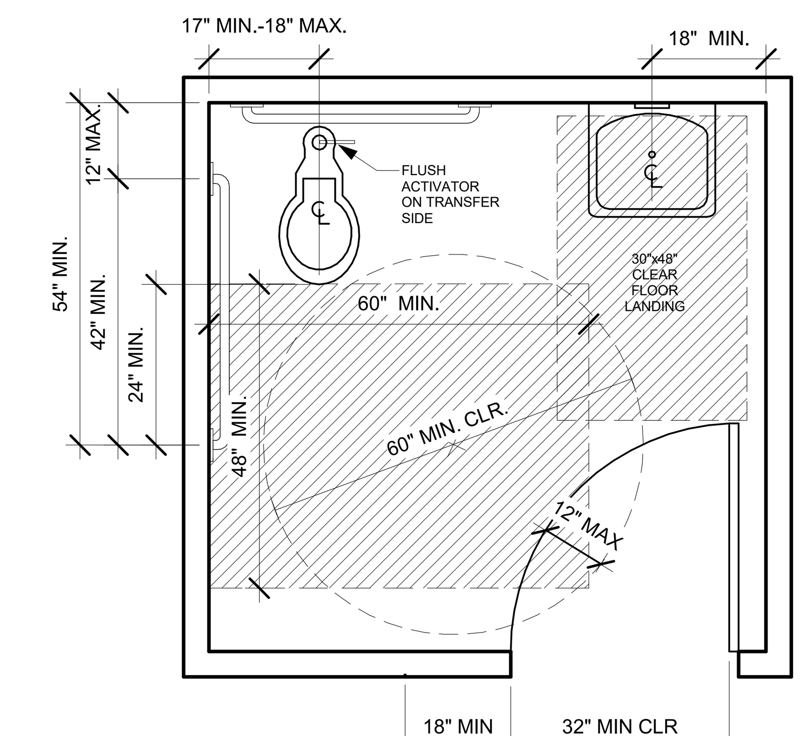

REF 2022 CBC 11B-604

23 ACC. SINGLE-ACCOMODATION TOILET
A944 SCALE: 1/2" = 1'-0"

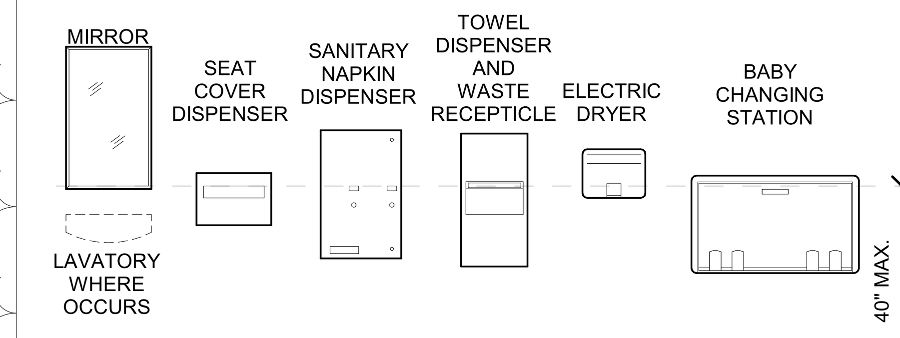

NOTE:
1. CLEAR FLOOR OR GROUND SPACE REQUIRED TO ALLOW FOR OR PARALLEL APPROACH TO ACCESSORIES.
2. ALL OPERABLE PARTS OF FIXTURES AND ACCESSORIES TO BE LOCATED 40" MAX. A.F.F..
3. CONTROLS AND OPERATING MECHANISMS MUST OPERATE WITH ONE HAND AND NOT REQUIRE TIGHT GRASPING, PINCHING OR TWISTING OF WRIST.
4. MAX. 5 POUND FORCE TO OPERATE CONTROLS.
5. LOCATE COAT HOOKS AND SHELVING WITHIN APPROPRIATE REACH RANGE (48" MAX. ABOVE FLOOR.)
6. MIRRORS NOT LOCATED ABOVE LAVATORY TO HAVE BOTTOM EDGE OF REFLECTING SURFACE 35" MAX A.F.F. REF. 11B-603.3-.5

11 ACC. RESTROOM ACCESSORIES
A944 SCALE: 3/8" = 1'-0"

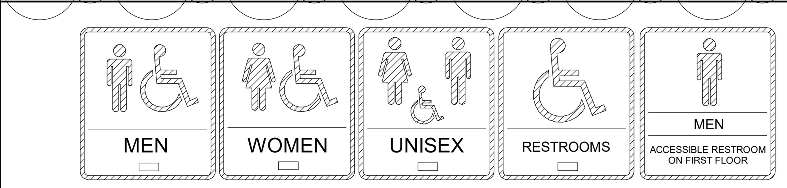

WALL-SIGNAGE (TYP.)

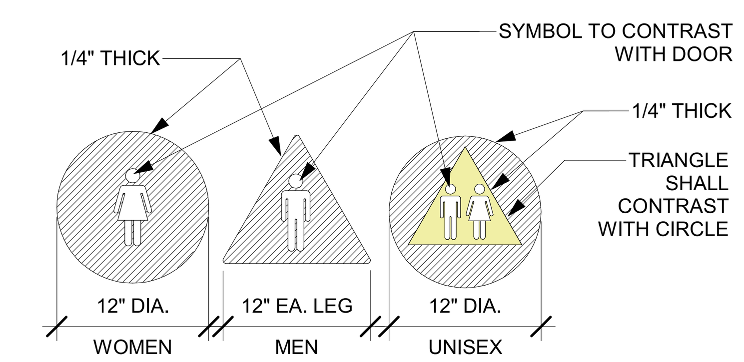

DOOR MOUNTED SIGNAGE (TYP.)

PICTOGRAMS AND/OR LETTERING ARE NOT REQUIRED ON DOOR-MOUNTED SIGNAGE

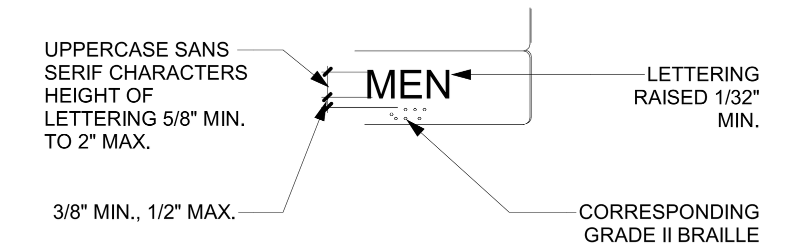

CHARACTER PROPORTIONS. CHARACTERS SHALL BE SELECTED FROM A FONT WHERE THE WIDTH OF THE UPPERCASE LETTER "O" IS 55% MINIMUM AND 110% MAXIMUM OF THE HEIGHT OF THE UPPERCASE LETTER "I".

MOUNTING LOCATION SHALL BE DETERMINED SO THAT A PERSON MAY APPROACH WITHIN 3 INCHES OF SIGNAGE WITHOUT ENCOUNTERING PROTRUDING OBJECTS OR STANDING WITHIN THE SWING OF A DOOR.

ROOM ID SIGN DETAIL

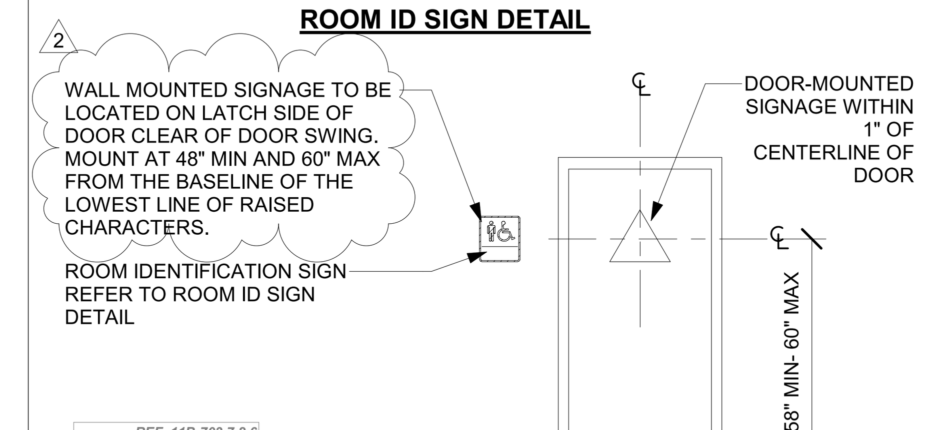

REF. 11B-703.7.2.6

13 ACC. RESTROOM ID SYMBOLS
A944 NTS

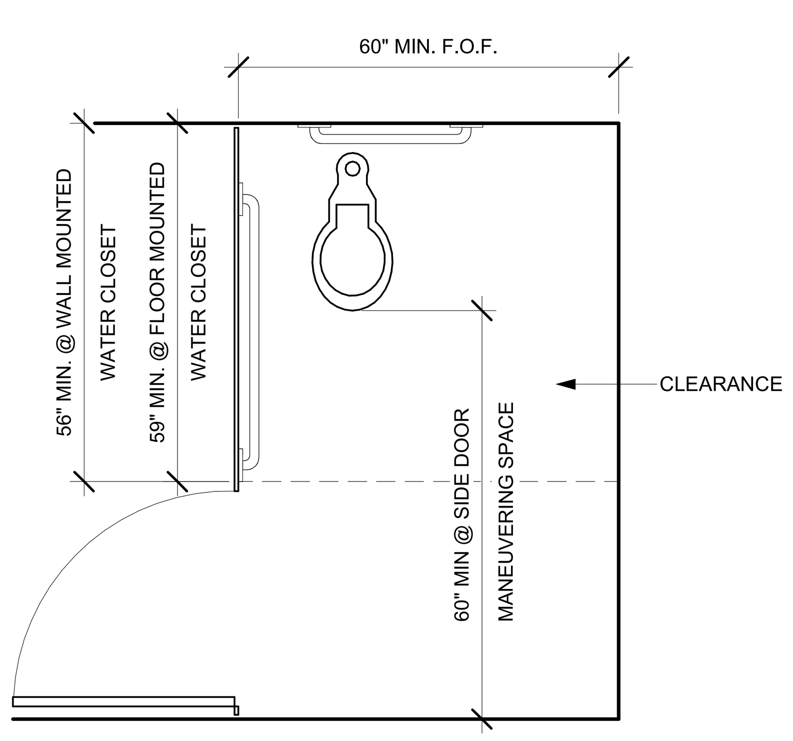

NOTE: TOTAL STALL DIMENSIONS MUST INCORPORATE CLEARANCES TO COMPLY WITH STATE AND FEDERAL REQUIREMENTS

IN-SWING DOOR

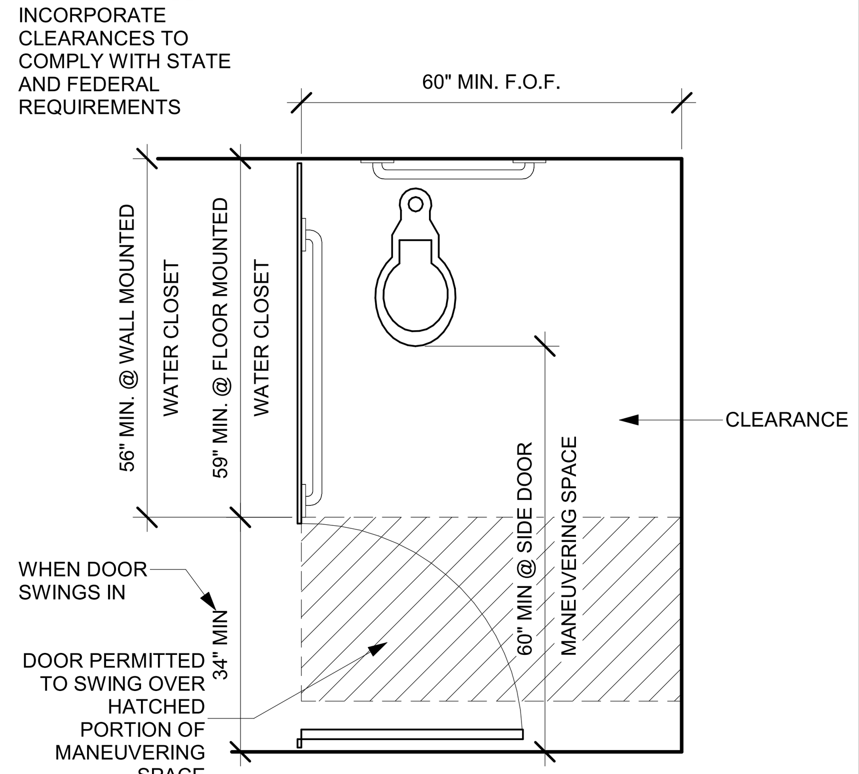

OUT-SWING DOOR

44 ACC. TOILET STALL- SIDE OPENING 3-6048.1.1.2
A944 SCALE: 1/2" = 1'-0"

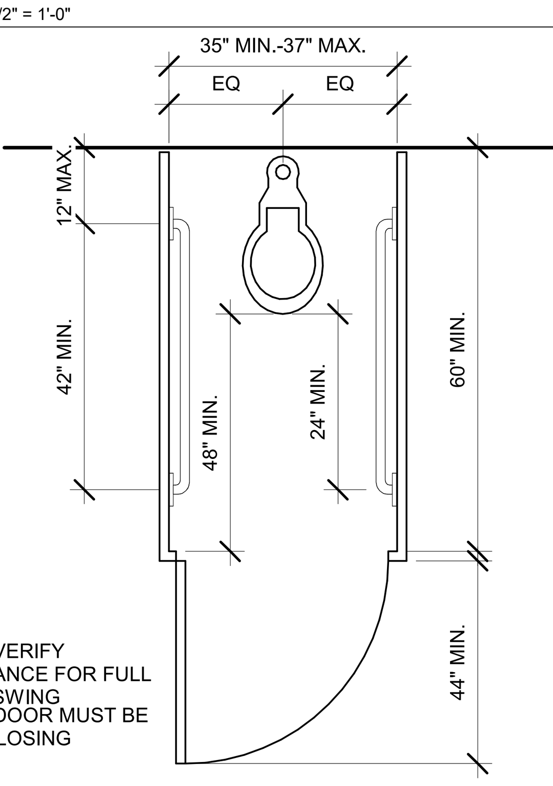

NOTE: VERIFY CLEARANCE FOR FULL DOOR SWING
NOTE: DOOR MUST BE SELF CLOSING

REF. 11B-604.8.2

34 ACC. AMBULATORY TOILET STALL
A944 SCALE: 1/2" = 1'-0"

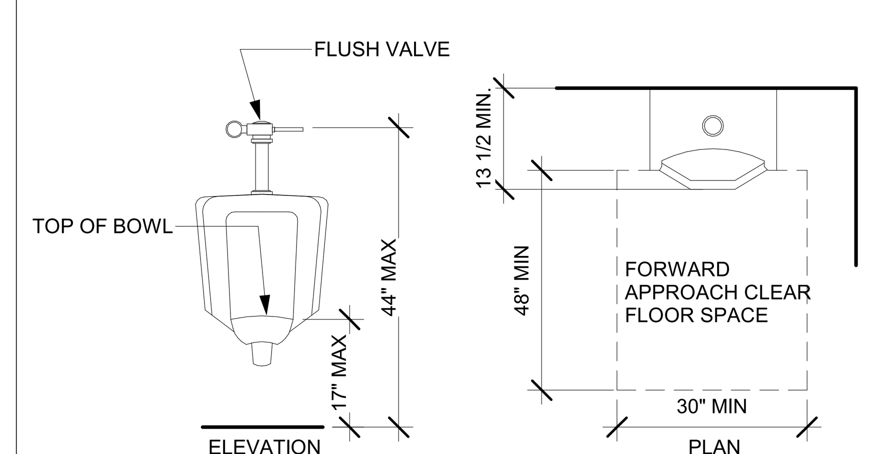

24 ACC. URINAL
A511 A944 SCALE: 1/2" = 1'-0"

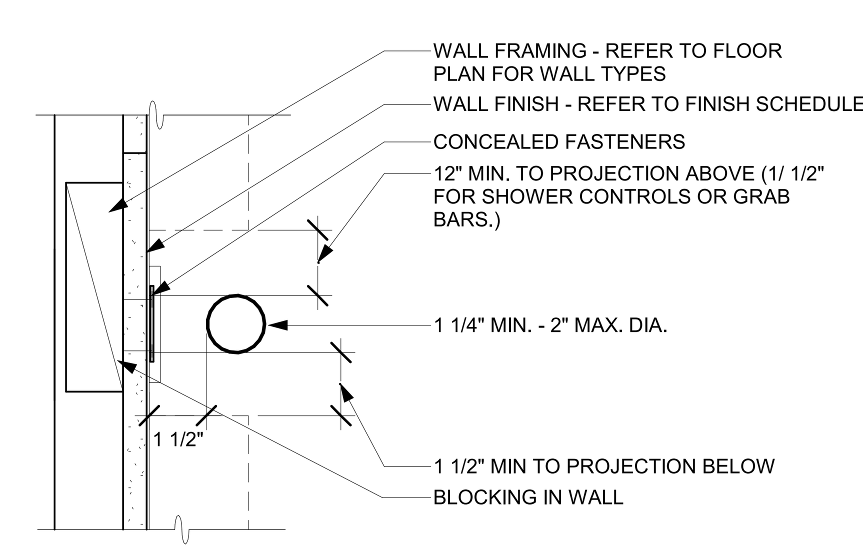

14 ACC. GRAB BAR ATTACHMENT
A944 SCALE: 3" = 1'-0"

rrm design group
rrmdesign.com | (805) 543-1794
3765 SOUTH HIGUERA STREET, SUITE 102
SAN LUIS OBISPO, CA 93401

THE INCLUDED DRAWINGS, SPECIFICATIONS, IDEAS, DESIGNS AND ARRANGEMENTS REPRESENTED THEREBY ARE AND SHALL REMAIN THE PROPERTY OF RRM DESIGN GROUP AND NO PART THEREOF SHALL BE COPIED, DISCLOSED TO OTHERS OR USED IN CONNECTION WITH ANY WORK OR PROJECT OTHER THAN THE SPECIFIED PROJECT FOR WHICH THEY HAVE BEEN PREPARED AND DEVELOPED WITHOUT THE WRITTEN CONSENT OF RRM DESIGN GROUP. VISUAL CONTACT WITH THESE DRAWINGS OR SPECIFICATIONS SHALL CONSTITUTE CONCLUSIVE EVIDENCE OF ACCEPTANCE OF THESE RESTRICTIONS. SUBMITTAL OF THESE DOCUMENTS FOR PUBLIC AGENCY REVIEW SHALL NOT BE CONSIDERED A WAIVER OF RRM DESIGN GROUP'S RIGHTS.
RRM DESIGN GROUP COPYRIGHT 2022
RRM IS A CALIFORNIA CORPORATION

LICENSED ARCHITECT THADDEUS SCOTT LUPTON C39678 10-31-25 RENEWAL DATE STATE OF CALIFORNIA

CONSULTANT

AGENCY

FOURTH ST COMMUNITY CENTER AND PARK
HENDERSON AVE., PORTERVILLE, CA 93257

ACCESSIBILITY DETAILS - RESTROOMS

NO.	REVISION	DATE
2	PLAN CHECK REVISION 2	09/17/24

PROJECT MANAGER TSL
DRAWN BY MC, NA, PM
CHECKED BY DD, KF
DATE 2024.09.17
PROJECT NUMBER 2883-01-RC22
SHEET A944

PLAN CHECK REVISION 2

9/20/2024 11:03:57 AM
Autodesk Docs://2883-01_Porterville Fourth St Community Center/2883-01-RC22_Porterville_v22.rvt

MATERIAL SPECIFICATIONS

GENERAL

ALL WORK SHALL CONFORM TO THE REQUIREMENTS OF THE GOVERNING CODE. SEE 'PROJECT DATA'

CONSTRUCTION LIABILITY
THE CONSTRUCTION CONTRACTOR AND HIS SUBCONTRACTORS AGREE THAT IN ACCORDANCE WITH GENERALLY ACCEPTED CONSTRUCTION PRACTICES, THE CONSTRUCTION CONTRACTOR AND HIS SUBCONTRACTORS WILL BE REQUIRED TO ASSUME SOLE AND COMPLETE RESPONSIBILITY FOR JOB SITE CONDITIONS DURING THE COURSE OF CONSTRUCTION OF THE PROJECT, INCLUDING SAFETY OF ALL PERSONS AND PROPERTY; THAT THIS REQUIREMENT SHALL BE MADE TO APPLY CONTINUOUSLY AND NOT LIMITED TO NORMAL WORKING HOURS, AND THE CONSTRUCTION CONTRACTOR AND HIS SUBCONTRACTORS FURTHER AGREE TO DEFEND, INDEMNIFY AND HOLD THE DESIGN PROFESSIONAL HARMLESS FROM ANY LIABILITY, REAL OR ALLEGED, IN CONNECTION WITH THE PERFORMANCE OF WORK ON THIS PROJECT, EXCEPT LIABILITY ARISING FROM THE SOLE NEGLIGENCE OF THE DESIGN PROFESSIONAL.

CONCRETE & REINFORCING

REINFORCING STEEL
BARS FOR REINFORCING SHALL BE GRADE 60 DEFORMED BARS CONFORMING TO ASTM A706 OR A615. LAP SPLICES SHALL BE IN ACCORDANCE WITH ACI 318, CURRENT EDITION UNLESS NOTED OTHERWISE ON THE PLANS. BARS TO BE WELDED OR FIELD BENT SHALL CONFORM TO ASTM A706.

CONCRETE
CONCRETE SHALL BE CONSTRUCTED IN ACCORDANCE WITH THE **2022** EDITION OF ACI 301 & 318. CONCRETE SHALL BE READY-MIXED CONCRETE IN ACCORDANCE WITH ASTM C94.

MAXIMUM WATER-CEMENT RATIO, BY WEIGHT

28 DAY COMPRESSIVE STRENGTH	WATER-CEMENT RATIO
3500 PSI CONCRETE	0.45
3000 PSI CONCRETE	0.50

AVERAGE DRYING SHRINKAGE FOR CONCRETE AFTER 21 DAYS OF DRYING SHALL NOT EXCEED 0.048% IN SLABS ON GRADE.

AT THE CONTRACTOR'S OPTION, AN AIR ENTRAINING AGENT CONFORMING TO THE LATEST REVISION OF ASTM SPECIFICATION C260 MAY BE ADDED TO THE CONCRETE TO PROVIDE UP TO A MAXIMUM OF 3% ± 1.5% ENTRAINED AIR. CEMENT SHALL BE IN ACCORDANCE WITH THE STANDARD SPECIFICATIONS FOR PORTLAND CEMENT PER ASTM DESIGNATION C150, TYPE II. NO MORE THAN 15% BY WEIGHT OF CEMENT MAY BE REPLACED BY FLY ASH CONFORMING TO ASTM C618, CLASS N OR F.

CONCRETE ELEMENT	MIN 28 DAY COMPRESSIVE STRENGTH	MAX SIZE AGGREGATE (INCHES)	SLUMP (INCHES)
FOOTINGS	3000	1-1/2	3
SLABS ON GRADE	3500	1	4

SLUMP WILL BE MEASURED AT THE TRUCK DISCHARGE. SLUMPS NOTED ABOVE ARE FOR CONCRETE WITHOUT ADMIXTURES TO BE CONSOLIDATED USING VIBRATION. FORMWORK CONSTRAINTS, CONGESTION OF REBAR, AND PUMPING OF CONCRETE MAY REQUIRE INCREASED SLUMP BEYOND THE SLUMP LISTED ABOVE. THE CONTRACTOR SHALL ADJUST THE SLUMP UP TO 8" MAX USING ADMIXTURES AS NECESSARY TO PROVIDE WORKABILITY AND CONSISTENCY TO PERMIT CONCRETE TO BE WORKED READILY INTO FORMS AND AROUND REINFORCEMENT UNDER CONDITIONS OF PLACEMENT TO BE EMPLOYED WITHOUT SEGREGATION OR EXCESSIVE BLEEDING. ALL ADMIXTURES SHALL BE NOTED IN THE SUBMITTED MIX DESIGN AND ARE SUBJECT TO THE ENGINEER'S REVIEW. THE SPECIAL INSPECTOR SHALL BE PROVIDED WITH A BATCH TICKET AND WEIGHT TAG UPON DELIVERY OF EACH LOAD OF CONCRETE.

ALL CONCRETE SHALL BE PLACED WITH MECHANICAL VIBRATION UNLESS NOTED OTHERWISE.

EXPOSURE CATEGORIES AND CLASSES FOR ALL CONCRETE TYPES ARE AS FOLLOW:

A. FREEZING AND THAWING:	CLASS: F0
B. SULFATE EXPOSURE:	CLASS: S0
C. IN CONTACT WITH WATER:	CLASS: W0
D. CORROSION PROTECTION OF REINFORCEMENT:	CLASS: C1

UNDER SLAB MATERIALS
SLAB MEMBRANE SHALL BE 15 MIL POLYETHYLENE FILM, UNLESS NOTED OTHERWISE. LAP SLAB MEMBRANE PER THE MANUFACTURER'S RECOMMENDATIONS, BUT NO LESS THAN 12 INCHES.

GRAVEL SHALL BE 3/4" CLEAN MATERIAL MEETING THE REQUIREMENTS OF ACI 302.1R.

POST INSTALLED ANCHORS

MECHANICAL ANCHORING SYSTEMS FOR CONCRETE
MECHANICAL ANCHORING SYSTEMS SHALL BE
- SIMPSON TITEN HD (ICC ESR-2713)
- APPROVED EQUAL

INSTALLATION OF ANCHORS INCLUDING DRILLING AND CLEANING OF HOLES SHALL BE IN ACCORDANCE WITH THE CURRENT ICC OR IAPMO REPORT

ADHESIVE ANCHORING SYSTEMS FOR CONCRETE
ADHESIVE ANCHORING SYSTEMS SHALL BE:
- HILTI HIT-RE 500 V3 (ICC ESR-3814) OR HIT-HY 200 **A or R** ***(choose)*** (ICC ESR 3187)
- SIMPSON SET-XP (ICC ESR-2508) OR AT-XP (IAPMO UES ER-263)
- DEWALT\POWERS PURE 110+ (ICC ESR-3298) OR AC100+ GOLD (ICC ESR-2582)
- APPROVED EQUAL.

INSTALLATION OF ANCHORS AND ADHESIVE INCLUDING DRILLING AND CLEANING OF HOLES SHALL BE IN ACCORDANCE WITH **CBC 1910A.5.4** AND THE CURRENT ICC OR IAPMO REPORT. ADHESIVES SHALL BE USED ONLY IN APPLICATIONS PERMITTED BY THE ADHESIVE'S ICC OR IAPMO REPORT. ADHESIVE ANCHORS SHALL BE INSTALLED IN CONCRETE HAVING A MINIMUM AGE OF 21 DAYS AT TIME OF ANCHOR INSTALLATION.

EXPANSION ANCHORS FOR CONCRETE
EXPANSION ANCHORS SHALL BE:
- HILTI KWIK BOLT TZ2 ANCHORS (ICC ESR-4266),
- SIMPSON STRONG BOLT 2 WEDGE ANCHOR (ICC ESR-3037)
- DEWALT\POWERS POWER-STUD+ SD2 (ICC ESR-2502)
- APPROVED EQUAL.

CONTRACTOR SHALL TORQUE ANCHORS IN ACCORDANCE WITH THE ICC OR IAPMO REPORT. EXPANSION ANCHORS SHALL USE WASHERS SIZED TO PREVENT CRUSHING OF THE ATTACHED MEMBER UNDER THE INSTALLATION TORQUE.

STRUCTURAL STEEL

STRUCTURAL STEEL AND MISCELLANEOUS IRON
STRUCTURAL STEEL AND MISCELLANEOUS IRON SHALL BE CONSTRUCTED IN ACCORDANCE WITH THE CURRENT EDITION OF THE AISC CODE OF STANDARD PRACTICE.

1. WIDE FLANGE AND STRUCTURAL TEE SHAPES SHALL CONFORM TO ASTM A992.
2. CHANNELS AND ANGLES SHALL CONFORM TO ASTM A36.
3. HOLLOW STRUCTURAL SECTIONS SHALL CONFORM TO ASTM A500, GRADE C.
4. STEEL PIPE SHALL CONFORM TO ASTM A53, GRADE B.
5. STRUCTURAL PLATE SHALL CONFORM TO ASTM A36 OR ASTM A572 GR50.
6. RAISED-PATTERN FLOOR PLATE SHALL CONFORM TO ASTM A786.

ALL STRUCTURAL STEEL AND MISCELLANEOUS IRON SHALL RECEIVE SHOP PRIME COAT EXCEPT ON SURFACES RECEIVING WELDS, EMBEDDED IN CONCRETE, OR AT SLIP CRITICAL HIGH STRENGTH BOLTS WHICH SHALL BE TOUCHED UP AFTER CONNECTION IS COMPLETE. STRUCTURAL STEEL AND MISCELLANEOUS IRON WHICH IS TO HAVE SPRAY ON FIREPROOFING SHALL NOT BE PAINTED. STRUCTURAL STEEL PERMANENTLY EXPOSED TO WEATHER SHALL RECEIVE TWO COATS OF SEMI-GLOSS ALKYD ENAMEL COMPATIBLE WITH PRIMER.

METAL DECKING
METAL DECKING SHALL COMPLY W/ THE TYPE, SIZE, THICKNESS & ATTACHMENT SHOWN ON THE PLANS AND SHALL BE SUBSTANTIATED BY AN ICC REPORT. METAL DECKING SHALL BE GALVANIZED IN ACCORDANCE WITH ASTM A653, G60 FOR INTERIOR CONDITIONS AND G90 FOR EXTERIOR CONDITIONS.

MACHINE BOLTS, ANCHOR BOLTS AND THREADED RODS
BOLTS, NUTS, WASHERS AND RODS PERMANENTLY EXPOSED TO WEATHER SHALL BE HOT DIPPED GALVANIZED.

1. BOLTS SHALL CONFORM TO ASTM A307 GRADE A OR B OR A36.
2. ANCHOR BOLTS AND RODS SHALL CONFORM TO ASTM F1554 GR 36.
3. ALL BOLTS & LAG SCREWS SHALL HAVE STANDARD STEEL WASHERS, U.N.O.
4. NUTS SHALL BE AS SHOWN BELOW AND FINISH SHALL MATCH FASTENER.
5. BOLT HOLES SHALL BE STANDARD SIZE (BOLT DIA + 1/16") TYP, U.N.O.

FASTENER GRADE AND SIZE	NUT CLASS	NUT STYLE
ASTM A36 , ASTM A307A, F1554 1/4" TO 1-1/2"	ASTM A563-A	HEX
ASTM A36 , ASTM A307A, F1554, OVER 1-1/2" TO 4"	ASTM A563-A	HEAVY HEX
ASTM A307B, 1/4" TO 4"	ASTM A563-A	HEAVY HEX

WELDING
ALL WELDING SHALL BE PERFORMED BY CERTIFIED WELDERS PER AWS "STANDARD QUALIFICATION PROCEDURE" TO PERFORM THE TYPE OF WORK REQUIRED. ALL WELDING SHALL BE IN ACCORDANCE WITH THE CURRENT AWS WELDING CODE. ARC WELDING ELECTRODES SHALL BE E70 SERIES FOR A36, A53, A500, A572 & A992 MATERIAL, AND E80 SERIES FOR A706 REINFORCING STEEL.

WELD METAL TOUGHNESS SHALL BE REPORTED ON THE ELECTRODE MANUFACTURER'S CERTIFICATE OF COMPLIANCE. ALL ELECTRODES SHALL BE LOW HYDROGEN WITH A MINIMUM CVN VALUE OF 20 FT-LBS AT -20 DEGREE F. EXCEPTIONS: METAL DECK WELDING, STAIR AND HANDRAIL WELDING, LIGHT GAGE STEEL WELDING.

TACK WELDS, AIR-ARC GOUGING AND FLAME CUTTING SHALL NOT BE PERFORMED WITHOUT ADEQUATE PREHEAT OR INCORPORATION INTO THE FINAL WELD.

THE FILLER METAL MANUFACTURER'S PUBLISHED RECOMMENDATIONS SHALL BE THE BASIS FOR DETERMINING THE ALLOWABLE RANGE OF ESSENTIAL VARIABLES FOR THE PRE QUALIFIED WPS. UNLESS NOTED OTHERWISE ON THE PLANS, BACK-UP BARS FOR CJP WELDS SHALL BE REMOVED FOLLOWED BY BACKGOUGING AND BACKWELDING.

AUTOMATIC END WELDED STUDS
AUTOMATIC END WELDED STUDS SHALL BE NELSON GRANULAR FLUX-FILLED S3L SHEAR CONNECTORS OR CFL FULLY THREADED STUDS (OR APPROVED EQUAL).

1. STUDS SHALL CONFORM TO ASTM A108, GRADES C1010 THROUGH C1020, COLD DRAWN STEEL.
2. HEADED ANCHOR STUDS SHALL BE AWS D1.1 TYPE B.
3. THREADED STUDS SHALL BE AWS D1.1 TYPE A.
4. ALL THREADED STUDS SHALL HAVE STANDARD STEEL WASHERS, U.N.O.

THE STUDS SHALL BE AUTOMATICALLY END WELDED IN ACCORDANCE WITH THE MANUFACTURER'S RECOMMENDATIONS IN SUCH A MANNER AS TO PROVIDE COMPLETE FUSION BETWEEN THE END OF THE STUD AND THE PLATE. THERE SHOULD BE NO POROSITY OR EVIDENCE OF LACK OF FUSION BETWEEN THE WELDED END OF THE STUD AND THE PLATE. THE STUD SHALL DECREASE IN LENGTH DURING WELDING APPROXIMATELY 1/8" FOR 5/8" DIAMETER AND UNDER, AND 3/16" FOR OVER 5/8" DIAMETER. WELDING SHALL BE DONE BY QUALIFIED WELDERS APPROVED BY THE WELDING INSPECTOR.

OPEN WEB STEEL JOIST
1. STEEL JOISTS SHALL BE OPEN WEB STEEL JOISTS AND GIRDERS, DESIGNED AND MANUFACTURED IN ACCORDANCE WITH "STANDARD SPECIFICATIONS FOR STEEL JOISTS, K-SERIES, LH-SERIES, DLH-SERIES AND JOIST GIRDERS" – CURRENT EDITION BY THE STEEL JOIST INSTITUTE.
2. CHORDS SHALL CONSIST OF HOT ROLLED ANGLES.
3. STEEL JOISTS SHALL RECEIVE SHOP PRIME COAT.
4. DESIGN AND CONSTRUCTION OF STEEL JOISTS SHALL BE IN ACCORDANCE WITH APPLICABLE REQUIREMENTS OF THE MOST CURRENT CBC EDITION ACCEPTED BY THE GOVERNING JURISDICTION. COMPLETE DESIGN CALCULATIONS SHOWING ALL STRESSES AND DEFLECTIONS FOR DEAD AND LIVE LOADS SHALL BE FURNISHED ALONG W/ SHOP DRAWINGS. CALCULATIONS AND SHOP DRAWINGS SHALL BE SIGNED BY A CIVIL ENGINEER REGISTERED IN THE STATE OF CALIFORNIA.
5. STEEL JOIST MANUFACTURER SHALL OBTAIN ALL NECESSARY APPROVALS FROM THE PUBLIC AGENCIES INVOLVED IN GOVERNING CONSTRUCTION.
6. DESIGN CRITERIA:

LOADING PSF=POUNDS PER SQUARE FOOT

ROOF:	DEAD LOAD	13 PSF + TRUSS WEIGHT + SOLAR WEIGHT AS APPLIES PER PLAN
	LIVE LOAD	20 PSF, REDUCED PER CBC

SPECIAL TOP CHORD LOADING AS SHOWN ON THE CONTRACT DRAWINGS

DEFLECTIONS		LIVE LOAD	DEAD + LIVE LOAD	MAXIMUM
ROOF:	CANTILEVER SPAN*	L/300	L/240	1"
	INTERIOR SPAN	L/360	L/240	1"

* AT CANTILEVER, L = 2X CANTILEVER SPAN

WOOD FRAMING

SAWN LUMBER
DOUGLAS FIR COAST REGION, CONFORMING TO WEST COAST LUMBER INSPECTION BUREAU STANDARD GRADING AND DRESSING RULE No. 17, AS AMENDED TO DATE.

MOISTURE CONTENT SHALL BE LESS THAN 19% FROM THE TIME OF INSTALLATION ONWARD.

1. 2x, 3x, 4x PLATES, JOISTS, PURLINS AND BEAMS, No. 1 & BETTER, UNLESS NOTED OTHERWISE ON THE DRAWINGS.
2. 2x, 3x, 4x PLATES, JOISTS, PURLINS AND BEAMS, SELECT STRUCTURAL, WHERE NOTED ON THE DRAWINGS.
3. 6x, & LARGER BEAMS, No. 1 WHEN BEAM WIDTH IS NOT MORE THAN 2" GREATER THAN THICKNESS, THE MEMBER SHALL CONFORM TO ITEM 6 BELOW.
4. 2x, 3x, 4x, LEDGERS, No. 1 UNLESS NOTED OTHERWISE ON THE DRAWINGS.
5. 4x4 AND 4x6 POSTS, No. 1 UNLESS NOTED OTHERWISE ON THE DRAWINGS.
6. 6x6 AND LARGER POSTS, DENSE No. 1, WHEN POST WIDTH IS MORE THAN 2" GREATER THAN THICKNESS, THE MEMBER SHALL CONFORM TO ITEM 3 ABOVE.
7. 2x, 3x, STUDS AND BLOCKING, No. 1
8. FOUNDATION PLATES: PRESSURE TREATED DOUGLAS FIR No. 1.

ALL FRAMING LUMBER 6" OR LARGER IN THE LEAST DIMENSION SHALL BE FOHC.

WOOD FRAMING PERMANENTLY EXPOSED TO WEATHER SHALL BE PRESSURE TREATED.

FASTENERS AND BOLT ASSEMBLIES IN PRESSURE TREATED LUMBER SHALL BE HOT DIPPED ZINC-COATED GALVANIZED STEEL IN COMPLIANCE WITH ASTM A 153.

BOLT HOLES SHALL BE 1/32" MIN TO 1/16" MAX LARGER THAN THE BOLT DIAMETER, U.N.O.

STRUCTURAL COMPOSITE LUMBER
COMPOSITE LUMBER SHALL BE IN CONFORMANCE WITH ASTM D5456 AND ICC ESR-1387. MEMBERS SHALL BE IDENTIFIED BY A STAMP INDICATING THE PRODUCT TYPE AND GRADE, ICC REPORT NUMBER, MANUFACTURER'S NAME, PLANT NUMBER, AND INSPECTION AGENCY'S LOGO.

REDLAM LVL:
- 2.0E (2900Fb) TYP, UNO

PARALLAM PSL:
- HEADERS, BEAMS, JOISTS: 2.2E (2900Fb) TYP, U.N.O.
- COLUMNS: 1.8E (2400Fb) TYP, U.N.O.

TIMBERSTRAND LSL
- 1.5"x5.5" STUDS: 1.3E
- 1.5"x7.25" STUDS: 1.5E

PLYWOOD
ALL PLYWOOD SHALL CONFORM TO U.S. PRODUCT STANDARD PS 1-19, AMERICAN PLYWOOD ASSOCIATION. EACH SHEET SHALL BE STAMPED WITH THE PS AND/OR APA GRADEMARK.

ALL PLYWOOD PERMANENTLY EXPOSED TO WEATHER SHALL BE EXTERIOR TYPE PLYWOOD.

ALL UNBLOCKED PLYWOOD EDGES SHALL BE TONGUE-AND-GROOVE OR SUPPORTED WITH PLYWOOD CLEATS OR PLYWOOD CLIPS.

ROOF PLYWOOD:
- 5 PLY EXPOSURE 1, CDX, SPAN RATING 32/16, SPECIES GROUP 2 OR BETTER.

WALL PLYWOOD:
- 3 PLY EXPOSURE 1, CDX, SPAN RATING 24/0, SPECIES GROUP 2 OR BETTER.

PRESERVATIVE TREATMENT FOR WOOD
PRESERVATIVE TREATMENT FOR WOOD SHALL BE WATER-BORNE, NON-ARSENIC, NON-CHROMIUM TYPE COMPLYING WITH AWPA STANDARD U1. PRESERVATIVE TREATMENT SHALL NOT CONTAIN PENTACHLOROPHENOL, ARSENIC COMPOUNDS, OR CREOSOTE. AFTER TREATMENT, RE-DRY WOOD TO BE USED IN ENCLOSED LOCATIONS TO A MOISTURE CONTENT OF 19% OR LESS. RETREAT ALL FIELD CUT ENDS AND SURFACES. FASTENERS AND BOLT ASSEMBLIES IN CONTACT WITH PRESSURE TREATED LUMBER SHALL BE HOT DIPPED GALVANIZED IN COMPLIANCE WITH ASTM A153.

LIGHT GAGE METAL CONNECTORS
ALL LIGHT GAGE METAL CONNECTORS SHALL BE SIMPSON STRONG TIE CONNECTORS OR APPROVED EQUAL, UNLESS NOTED OTHERWISE ON THE DRAWINGS. CONNECTORS IN CONTACT WITH PRESSURE TREATED LUMBER TO BE HOT DIPPED ZINC-COATED GALVANIZED STEEL IN COMPLIANCE WITH ASTM A653 OR ASTM A123.

PREFABRICATED WOOD I-JOISTS
1. PREFABRICATED WOOD I-JOISTS SHALL BE RED-I SERIES TRUSS-JOISTS DESIGNED AND MANUFACTURED BY REDBUILT, LLC, (ICC ESR-2994) OR APPROVED EQUAL.
2. THE CONTRACTOR SHALL SUBMIT SHOP DRAWINGS FOR THE WOOD I-JOISTS TO BE INSTALLED AS SHOWN ON THE CONTRACT DRAWINGS, INCLUDING LAYOUT, SIZE OF MEMBERS AND CONNECTION DETAILS. IN ADDITION TO THE ABOVE DRAWINGS, CALCULATIONS SHOWING ALL STRESSES AND DEFLECTIONS CAUSED BY DEAD AND LIVE LOADS SHALL BE SUBMITTED TO THE ENGINEER FOR REVIEW. DRAWINGS AND CALCULATIONS SHALL BE SIGNED BY A CIVIL ENGINEER REGISTERED IN THE STATE OF CALIFORNIA.
3. PREFABRICATED WOOD I-JOISTS DESIGN AND CONSTRUCTION SHALL BE IN ACCORDANCE WITH AN ICC REPORT AND 2022 CALIFORNIA BUILDING CODE (CBC), PART 2, SECTION 2303.4.
4. JOIST MANUFACTURER SHALL OBTAIN ALL NECESSARY APPROVALS FROM THE PUBLIC AGENCIES INVOLVED IN GOVERNING CONSTRUCTION.
5. DESIGN CRITERIA:

LOADING PSF=POUNDS PER SQUARE FOOT

ROOF:	DEAD LOAD	14 PSF + TRUSS WEIGHT + SOLAR WEIGHT AS APPLIES PER PLAN
	LIVE LOAD	20 PSF, REDUCED PER CBC

DEFLECTIONS		LIVE LOAD	DEAD + LIVE LOAD	MAXIMUM
ROOF:	CANTILEVER SPAN*	L/300	L/240	1"
	INTERIOR SPAN	L/360	L/240	1"

* AT CANTILEVER, L = 2X CANTILEVER SPAN

GENERAL NOTES

1. CONSIDER GENERAL NOTES AS APPLYING TO ALL DRAWINGS.
2. DO NOT SCALE DRAWINGS. SCALE SHOWN FOR REFERENCE ONLY.
3. THE CONTRACTOR SHALL REFER TO THE PROJECT SPECIFICATIONS IN CONJUNCTION WITH THE STRUCTURAL DRAWINGS.
4. THE CONTRACTOR IS RESPONSIBLE FOR COORDINATION OF THE STRUCTURAL WORK WITH THE ARCHITECTURAL, CIVIL, AND MEP CONTRACT DOCUMENTS, AS WELL AS ANY OTHER APPLICABLE TRADES. OMISSIONS OR CONFLICTS BETWEEN VARIOUS ELEMENTS OF THE DRAWINGS, NOTES, AND DETAILS SHALL BE BROUGHT TO THE ATTENTION OF THE ARCHITECT AND RESOLVED PRIOR TO BIDDING AND PROCEEDING WITH THE WORK.
5. THE CONTRACTOR IS SOLELY RESPONSIBLE FOR THE DESIGN, INSTALLATION, AND REMOVAL OF TEMPORARY BRACING AND CONSTRUCTION SUPPORTS REQUIRED TO COMPLETE THE PROJECT. NO PORTION OF THE STRUCTURE SHALL BE CONSIDERED TO BE SELF SUPPORTING UNTIL THE ENTIRE VERTICAL AND LATERAL LOAD RESISTING SYSTEM IS IN PLACE.
6. THE CONTRACTOR SHALL PROTECT AND SHORE ALL EXCAVATIONS WITH BRACING AND SHORING AS REQUIRED TO MAINTAIN SOIL STABILITY.
7. CONSTRUCT THOSE FEATURES OF THE PROJECT, WHICH MAY NOT BE FULLY SHOWN, IN MANNER SIMILAR TO THAT USED FOR SIMILAR FEATURES.
8. CENTERLINES OF COLUMNS AND FOUNDATIONS COINCIDE WITH GRID LINE INTERSECTIONS, U.N.O.
9. CENTERLINES OF FOUNDATION GRADE BEAMS COINCIDE WITH CENTERLINES OF WALLS, U.N.O.
10. CENTERLINES OF FRAMING MEMBERS COINCIDE WITH COLUMN CENTERLINES, U.N.O.
11. THE CONTRACTOR SHALL SUBMIT SHOP DRAWINGS SHOWING PROPOSED FOUNDATION CONSTRUCTION JOINT LOCATIONS, DETAILS, AND THE PLACEMENT SEQUENCE FOR THE STRUCTURAL ENGINEER'S APPROVAL PRIOR TO PROCEEDING WITH WORK.
12. NO CONSTRUCTION JOINTS WILL BE PERMITTED IN BEAMS, WALLS, AND SLABS UNLESS SPECIFICALLY SHOWN ON THE DRAWINGS OR APPROVED BY THE ENGINEER PRIOR TO CONSTRUCTION.
13. SPLICES SHALL BE ALLOWED ONLY AT LOCATIONS SPECIFICALLY INDICATED ON THE STRUCTURAL DRAWINGS UNLESS APPROVED OTHERWISE BY THE ENGINEER.
14. SEE ARCHITECTURAL DRAWINGS FOR SIZE AND LOCATION OF OPENINGS. VERIFY SIZE AND LOCATION OF ALL OPENINGS WITH ARCHITECTURAL DRAWINGS AND MECHANICAL DRAWINGS. NOTIFY STRUCTURAL ENGINEER IMMEDIATELY OF ANY DISCREPANCIES TYPICAL, U.N.O.

MATERIAL SPECIFICATIONS

1. CONSIDER GENERAL NOTES AS APPLYING TO ALL DRAWINGS.
2. DO NOT SCALE DRAWINGS. SCALE SHOWN FOR REFERENCE ONLY.
3. THE CONTRACTOR SHALL REFER TO THE PROJECT SPECIFICATIONS IN CONJUNCTION WITH THE STRUCTURAL DRAWINGS.
4. THE CONTRACTOR IS RESPONSIBLE FOR COORDINATION OF THE STRUCTURAL WORK WITH THE ARCHITECTURAL, CIVIL, AND MEP CONTRACT DOCUMENTS, AS WELL AS ANY OTHER APPLICABLE TRADES. OMISSIONS OR CONFLICTS BETWEEN VARIOUS ELEMENTS OF THE DRAWINGS, NOTES, AND DETAILS SHALL BE BROUGHT TO THE ATTENTION OF THE ARCHITECT AND RESOLVED PRIOR TO BIDDING AND PROCEEDING WITH THE WORK.
5. THE CONTRACTOR IS SOLELY RESPONSIBLE FOR THE DESIGN, INSTALLATION, AND REMOVAL OF TEMPORARY BRACING AND CONSTRUCTION SUPPORTS REQUIRED TO COMPLETE THE PROJECT. NO PORTION OF THE STRUCTURE SHALL BE CONSIDERED TO BE SELF SUPPORTING UNTIL THE ENTIRE VERTICAL AND LATERAL LOAD RESISTING SYSTEM IS IN PLACE.
6. THE CONTRACTOR SHALL PROTECT AND SHORE ALL EXCAVATIONS WITH BRACING AND SHORING AS REQUIRED TO MAINTAIN SOIL STABILITY.
7. CONSTRUCT THOSE FEATURES OF THE PROJECT, WHICH MAY NOT BE FULLY SHOWN, IN MANNER SIMILAR TO THAT USED FOR SIMILAR FEATURES.
8. CENTERLINES OF COLUMNS AND FOUNDATIONS COINCIDE WITH GRID LINE INTERSECTIONS, U.N.O.
9. CENTERLINES OF FOUNDATION GRADE BEAMS COINCIDE WITH CENTERLINES OF WALLS, U.N.O.
10. CENTERLINES OF FRAMING MEMBERS COINCIDE WITH COLUMN CENTERLINES, U.N.O.
11. THE CONTRACTOR SHALL SUBMIT SHOP DRAWINGS SHOWING PROPOSED FOUNDATION CONSTRUCTION JOINT LOCATIONS, DETAILS, AND THE PLACEMENT SEQUENCE FOR THE STRUCTURAL ENGINEER'S APPROVAL PRIOR TO PROCEEDING WITH WORK.
12. NO CONSTRUCTION JOINTS WILL BE PERMITTED IN BEAMS, WALLS, AND SLABS UNLESS SPECIFICALLY SHOWN ON THE DRAWINGS OR APPROVED BY THE ENGINEER PRIOR TO CONSTRUCTION.
13. SPLICES SHALL BE ALLOWED ONLY AT LOCATIONS SPECIFICALLY INDICATED ON THE STRUCTURAL DRAWINGS UNLESS APPROVED OTHERWISE BY THE ENGINEER.
14. SEE ARCHITECTURAL DRAWINGS FOR SIZE AND LOCATION OF OPENINGS. VERIFY SIZE AND LOCATION OF ALL OPENINGS WITH ARCHITECTURAL DRAWINGS AND MECHANICAL DRAWINGS. NOTIFY STRUCTURAL ENGINEER IMMEDIATELY OF ANY DISCREPANCIES TYPICAL, U.N.O.

PROJECT DATA

1. PLANS AND CALCULATIONS FOR THE STRUCTURAL DESIGN WERE BASED UPON:
   - GOVERNING CODE: 2022 CALIFORNIA BUILDING CODE
   - SOILS REPORT: "GEOTECHINICAL INVESTIGATION" PROJECT NUMBER: 22-18633 BY SOILS ENGINEERING, INC. DATED JANUARY 13, 2023

2. VERTICAL LOADS:
   GYM ROOF DEAD LOAD = 18 PSF + SOLAR LOAD BELOW
   TYPICAL ROOF DEAD LOAD = 17 PSF + SOLAR LOAD BELOW
   ROOF LIVE LOAD = 20 PSF [REDUCED PER CODE]

3. EARTHQUAKE DESIGN DATA:
   EQUIVALENT LATERAL FORCE PROCEDURE
   $V = \frac{S_{DS} I}{R} W$
   $S_S = .574$; $S_1 = .223$
   $S_{DS} = .513$; $S_{D1} = .320$
   I = 1.25; RISK CATEGORY III
   SITE CLASS = D; SEISMIC DESIGN CAT = D
   SEISMIC RESISTING SYSTEM: LIGHT FRAME WOOD SHEARWALLS
   $R = 6.5$; $\Omega_o = 3.0$; $C_d = 4.0$

   V = .099 W [LRFD]

   STRUCTURAL IRREGULARITIES: HORIZONTAL TYPE 2 (REENTRANT CORNER) 4 (OUT-OF-PLANE OFFSET) & 5 (NON PARALLEL SYSTEM)

4. WIND DESIGN DATA:
   BASIC WIND SPEED = 101 MPH
   RISK CATEGORY III
   WIND EXPOSURE = C
   INTERNAL PRESSURE COEFFICIENT = +0.18, -0.18
   DESIGN WIND PRESSURE = 21.8 PSF
   WALL COMPONENTS AND CLADDING PRESSURE = +25.7 (ZONE 4,5), -27.8 (ZONE 4) -34.4 (ZONE 5) PSF [LRFD]
   ROOF COMPONENTS AND CLADDING PRESSURE = +16.0 (ALL ZONES), -23.5 (ZONE 1') -40.9 (ZONE 1/OVERHANG 1) -53.9 (ZONE 2/OVERHANG 2) -73.5 (ZONE 3/OVERHANG 3) PSF [LRFD]

   NOTE: COMPONENTS & CLADDING PRESSURES ABOVE ARE WORST CASE PRESSURES BASED ON 10 SF TRIBUTARY AREA AND MAY BE REDUCED PER ASCE 7. POSITIVE AND NEGATIVE PRESSURES SIGNIFY WIND ACTING TOWARD AND AWAY FROM SURFACES, RESPECTIVELY.

5. FOUNDATION DESIGN CRITERIA:
   BEARING PRESSURES:
   DL + LL 2500 PSF
   TOTAL LOAD 3333 PSF

6. SOLAR PANEL ALLOWANCE:
   THE DESIGN HAS ACCOUNTED FOR FUTURE SOLAR PANELS TO BE LOCATED ON THE ROOFS. HOWEVER A DESIGN OF THE SOLAR PANEL SUPPORT STRUCTURE IS NOT INCLUDED IN THIS CONTRACT.

   MAXIMUM SOLAR PANEL ALLOWANCE = 3 PSF

SHEET INDEX

S-001	MATERIAL DATA & PROJECT INFORMATION
S-002	TESTING & SPECIAL INSPECTION
S-101	TYPICAL DETAILS No. 1
S-102	TYPICAL DETAILS No. 2
S-103	TYPICAL DETAILS No. 3
S-104	TYPICAL DETAIL No. 4
S-105	TYPICAL DETAILS No. 5
S-106	TYPICAL DETAILS No. 6
S-107	TYPICAL DETAILS No. 7
S-108	TYPICAL DETAILS No. 8
S-109	TYPICAL DETAILS No. 9
S-110	TYPICAL DETAILS No. 10
S-111	TYPICAL DETAILS No. 11
S-201	FOUNDATION PLAN
S-202	FOUNDATION PLAN - SOUTH
S-203	FOUNDATION PLAN - NORTH
S-204	WALL STUD KEY PLAN
S-211	ROOF FRAMING PLAN
S-212	ROOF FRAMING PLAN - SOUTH
S-213	ROOF FRAMING PLAN - NORTH
S-221	CEILING & TRELLIS FRAMING PLAN
S-301	FOUNDATION DETAILS No. 1
S-401	ROOF FRAMING DETAILS No. 1
S-402	ROOF FRAMING DETAILS No. 2
S-403	ROOF FRAMING DETAILS No. 3
S-501	WALL SECTIONS No. 1
S-502	WALL SECTIONS No. 2

rrm design group
rrmdesign.com | (805) 543-1794
3765 SOUTH HIGUERA STREET, SUITE 102
SAN LUIS OBISPO, CA 93401

THE INCLUDED DRAWINGS, SPECIFICATIONS, IDEAS, DESIGNS AND ARRANGEMENTS REPRESENTED THEREBY ARE AND SHALL REMAIN THE PROPERTY OF RRM DESIGN GROUP AND NO PART THEREOF SHALL BE COPIED, DISCLOSED TO OTHERS OR USED IN CONNECTION WITH ANY WORK OR PROJECT OTHER THAN THE SPECIFIED PROJECT FOR WHICH THEY HAVE BEEN PREPARED AND DEVELOPED WITHOUT THE WRITTEN CONSENT OF RRM DESIGN GROUP. VISUAL CONTACT WITH THESE DRAWINGS OR SPECIFICATIONS SHALL CONSTITUTE CONCLUSIVE EVIDENCE OF ACCEPTANCE OF THESE RESTRICTIONS. SUBMITTAL OF THESE DOCUMENTS FOR PUBLIC AGENCY REVIEW SHALL NOT BE CONSIDERED A WAIVER OF RRM DESIGN GROUP'S RIGHTS.
RRM DESIGN GROUP COPYRIGHT 2023
RRM IS A CALIFORNIA CORPORATION

REGISTERED PROFESSIONAL ENGINEER
DUSTIN G. LEE
No. S6623
EXP. 3/31/25
STRUCTURAL
STATE OF CALIFORNIA

CONSULTANT

CORNERSTONE
structural engineering group
986 W. Alluvial, Suite 201
Fresno, California 93711
559.320.3200
fax 559.320.3201

AGENCY

PORTERVILLE COMMUNITY CENTER
N 4TH ST, PORTERVILLE, CA 93257

MATERIAL DATA & PROJECT INFORMATION

CONSTRUCTION DOCUMENTS

NO.	REVISION	DATE
△		
△		
△		
△		
△		
△		

PROJECT MANAGER

DRAWN BY | CHECKED BY

DATE
09.10.24

PROJECT NUMBER
2883-01-RC22

SHEET
S-001

9/10/2024 2:24:58 PM
\\cseg-fr-fs01\frhome$\markw\Porterville_2022_Structural_danderson@cseg.com.rvt

TESTING AND SPECIAL INSPECTION

GENERAL

THE OWNER SHALL EMPLOY A SPECIAL INSPECTOR AND DURING CONSTRUCTION ON THE FOLLOWING TYPES OF WORK.

SPECIAL INSPECTOR
- THE SPECIAL INSPECTOR SHALL BE A QUALIFIED PERSON WHO SHALL DEMONSTRATE HIS COMPETENCE, TO THE SATISFACTION OF THE BUILDING OFFICIAL, FOR INSPECTION OF A PARTICULAR TYPE OF CONSTRUCTION OR OPERATION REQUIRING SPECIAL INSPECTION.
- TESTING AND INSPECTIONS WILL BE PERFORMED BY AN INDEPENDENT TESTING LABORATORY SELECTED AND EMPLOYED BY THE OWNER AND APPROVED BY THE BUILDING OFFICIAL. PROCEDURAL AND ACCEPTANCE CRITERIA ARE SET FORTH IN THE 2022 CALIFORNIA BUILDING CODE (CBC) SEC. 1704.

DUTIES AND RESPONSIBILITIES OF THE SPECIAL INSPECTOR
- THE SPECIAL INSPECTOR SHALL OBSERVE THE WORK ASSIGNED FOR CONFORMANCE WITH THE APPLICABLE PROJECT DRAWINGS AND SPECIFICATIONS.
- THE SPECIAL INSPECTOR SHALL FURNISH INSPECTION REPORTS TO THE BUILDING OFFICIAL, THE OWNER OR OWNER'S DESIGNATED REPRESENTATIVE, THE ARCHITECT OR PROJECT MANAGER, THE STRUCTURAL ENGINEER OF RECORD, THE CONTRACTOR AND OTHER PERSONS DESIGNATED BY THE OWNER OR OWNER'S REPRESENTATIVE. ALL DISCREPANCIES SHALL BE BROUGHT TO THE IMMEDIATE ATTENTION OF THE CONTRACTOR FOR CORRECTION, THEN IF UNCORRECTED, TO THE PROPER DESIGN AUTHORITY AND TO THE BUILDING OFFICIAL.
- THE SPECIAL INSPECTOR SHALL SUBMIT A FINAL SIGNED REPORT STATING WHETHER THE WORK REQUIRING SPECIAL INSPECTION WAS, TO THE BEST OF THE INSPECTOR'S KNOWLEDGE, IN CONFORMANCE WITH THE PROJECT PLANS AND SPECIFICATIONS AND THE APPLICABLE WORKMANSHIP PROVISIONS OF THE CBC.

SOILS & FOUNDATIONS

SOILS
- PERIODICALLY INSPECT MATERIALS BELOW FOOTING FOR BEARING CAPACITY.
- PERIODICALLY INSPECT EXCAVATIONS FOR PROPER DEPTH.
- PERIODICALLY PERFORM CLASSIFICATION AND TESTING OF CONTROLLED FILL MATERIALS.
- CONTINUOUSLY VERIFY USE OF PROPER MATERIALS, DENSITIES, AND LIFT THICKNESS DURING PLACEMENT AND COMPACTION OF CONTROLLED FILL.
- PRIOR TO PLACEMENT OF CONTROLLED FILL, OBSERVE SUBGRADE AND VERIFY SITE HAS BEEN PREPARED PROPERLY.

FOUNDATIONS

PRIOR TO THE CONTRACTOR REQUESTING A BUILDING DEPARTMENT FOUNDATION INSPECTION, THE SOILS ENGINEER SHALL ADVISE THE BUILDING DEPARTMENT OF THE FOLLOWING IN WRITING:
- THAT THE BUILDING PAD WAS PREPARED IN ACCORDANCE WITH THE SOILS REPORT.
- THAT THE UTILITY TRENCHES HAVE BEEN PROPERLY BACKFILLED AND COMPACTED.
- THAT THE FOUNDATION COMPLY WITH THE SOILS REPORT AND THE APPROVED PLANS.

CONCRETE & REINFORCING

REINFORCING STEEL
- VERIFY THAT MILL CERTIFICATES SHOW REINFORCING STEEL IS IN COMPLIANCE WITH PROJECT SPECIFICATIONS.
- TAKE A 5' LONG SAMPLE OF EACH BAR SIZE FROM EACH HEAT FOR EACH TYPE OF REINFORCING STEEL SHALL BE TESTED FOR ULTIMATE STRENGTH, YIELD STRESS, MODULUS OF ELASTICITY AND PERCENT ELONGATION AT RUPTURE.
- PERIODICALLY INSPECT THE PLACEMENT OF REINFORCING STEEL FOR SHOTCRETE, FOR CONCRETE WHICH IS REQUIRED TO HAVE CONTINUOUS INSPECTION AND FOR MASONRY.
- CONTINUOUSLY INSPECT THE INSTALLATION OF ALL MECHANICAL COUPLING DEVICES.

BOLTS INSTALLED IN CONCRETE
- PERIODICALLY INSPECT INSTALLATION OF BOLTS AND CONTINUOUSLY INSPECT PLACEMENT OF CONCRETE AROUND SUCH BOLTS.

CONCRETE
- CONTINUOUSLY INSPECT THE PLACEMENT OF ALL CONCRETE EXCEPT PERIODIC INSPECTION MAY BE PROVIDED FOR THE PLACEMENT OF CONCRETE FOR FOUNDATIONS WITH f'c EQUAL TO 2500 PSI OR LESS AND NON-STRUCTURAL SLABS ON GRADE.
- SAMPLE CONCRETE: ASTM C172, EXCEPT SLUMP SHALL COMPLY WITH ASTM C94.
- TEST SLUMP: ASTM C143, ONE TEST AT POINT OF TRUCK DISCHARGE FOR 150 CY OR FRACTION THEREOF FOR EACH TYPE OF CONCRETE; ADDITIONAL TESTS REQUIRED WHEN CONCRETE CONSISTENCY SEEMS TO HAVE CHANGED.
- TEST AIR CONTENT: ASTM C173, VOLUMETRIC METHOD FOR LIGHTWEIGHT OR NORMAL WEIGHT CONCRETE, ONE FOR EACH 150 CY PLACED OR FRACTION THEREOF FOR EACH TYPE OF AIR-ENTRAINED CONCRETE.
- TEST CONCRETE TEMPERATURE: TEST HOURLY WHEN AIR TEMPERATURE IS 50 DEGREES F. (10 DEGREES C.) AND BELOW, AND WHEN 85 DEGREES F. (29 DEGREES C.) AND ABOVE; AND EACH TIME A SET OF COMPRESSION TEST SPECIMENS ARE MADE.
- TAKE COMPRESSION TEST SPECIMENS: ASTM C31, TAKE ONE SET OF 3 STANDARD CYLINDERS FOR EACH 150 CY OF CONCRETE OR 5000 SQ. FT. OF SLABS & WALLS OR FRACTION THEREOF FOR EACH TYPE OF CONCRETE TAKEN EACH DAY. MOLD AND STORE CYLINDERS FOR LABORATORY CURED TEST SPECIMENS EXCEPT WHEN FIELD-CURE TEST SPECIMENS ARE REQUIRED.
- TAKE FIELD CURED COMPRESSION TEST SPECIMENS: ASTM C31, TAKE ONE SET OF 3 STANDARD CYLINDERS FOR EACH 150 CY OF CONCRETE OR 5000 SQ. FT. OF SLABS & WALLS OR FRACTION THEREOF FOR EACH TYPE OF CONCRETE PLACED EACH DAY; WHEN THE CONTRACTOR PLANS TO REMOVE FORM WORK, FALSE WORK OR SHORING SOONER THAN 7 DAYS FOR VERTICAL FORM WORK AND 14 DAYS FOR SHORING AND FALSE WORK; OR WHEN POST-TENSIONING IS REQUIRED.
- TEST COMPRESSIVE STRENGTH: ASTM C39; ONE SPECIMEN TESTED AT 7 DAYS, TWO SPECIMENS TESTED AT 28 DAYS.
- TEST DRYING SHRINKAGE: ASTM C157, TAKE 1 SET OF 3 DRYING SHRINKAGE SAMPLES FOR EACH DAY'S POUR OF SLABS ON GRADE, SUSPENDED SLABS, AND POST-TENSIONED CONCRETE SLABS.

NON-SHRINK GROUT
- TAKE TEST SPECIMENS AND CONTINUOUSLY INSPECT THE PLACEMENT OF NON-SHRINK GROUT.

POST INSTALLED ANCHORS

POST-INSTALLED ANCHORS
- THE SPECIAL INSPECTOR SHALL VERIFY THE INSPECTION REQUIREMENTS WITH THE ICC REPORT FOR EACH ANCHOR TYPE.
- THE SPECIAL INSPECTOR SHALL VERIFY THE INITIAL INSTALLATIONS OF EACH TYPE AND SIZE OF ANCHOR BY CONSTRUCTION PERSONNEL.
- PERIODICALLY INSPECT PLACEMENT OF POST-INSTALLED ANCHORS.
- CONTINUOUSLY INSPECT PLACEMENT OF OVERHEAD (VERTICAL UP) POST-INSTALLED ANCHORS.
- THE SPECIAL INSPECTOR SHALL VERIFY THE FOLLOWING AND RECORD THE INSTALLATION IN THE INSPECTION REPORT:
  1. ANCHOR TYPE, SIZE, AND DIMENSIONS.
  2. HOLE DIMENSIONS AND CLEANLINESS.
  3. ANCHOR SPACING.
  4. EDGE DISTANCE.
  5. ANCHOR EMBEDMENT.
  6. TORQUE VALUE (AS APPLICABLE).
  7. ADHESIVE TYPE AND EXPIRATION (AS APPLICABLE).
  8. ADHESIVE ANCHOR INSTALLER CERTIFICATION (AS APPLICABLE).

STRUCTURAL STEEL

STRUCTURAL STEEL AND MISCELLANEOUS IRON
- VERIFY THAT MILL CERTIFICATES SHOW STRUCTURAL STEEL AND MISCELLANEOUS IRON IS IN COMPLIANCE WITH PROJECT SPECIFICATIONS.

METAL DECK
- VERIFY THAT MILL CERTIFICATES SHOW METAL DECK IS IN COMPLIANCE WITH PROJECT SPECIFICATIONS.
- TAKE COUPON SAMPLES FOR EACH 5000 SQUARE FEET OF EACH TYPE OF METAL DECK WITH A MINIMUM OF ONE SAMPLE FROM EACH LOT.
- TEST EACH SAMPLE OF METAL DECK FOR ULTIMATE STRENGTH AND YIELD STRESS.
- PERIODICALLY INSPECT THE PLACEMENT OF ALL METAL DECK PRIOR TO METAL DECK BEING COVERED.

WELDING
- VERIFY WELDER CERTIFICATIONS, COMPLIANCE WITH WELDING PROCEDURE SPECIFICATIONS AND PQR (IF APPLICABLE).
- CONTINUOUSLY INSPECT ALL STRUCTURAL WELDING, INCLUDING WELDING OF REINFORCING STEEL.

EXCEPTIONS:
- SINGLE PASS FILLET WELDS NOT EXCEEDING 5/16" MAY HAVE PERIODIC INSPECTION.
- FLOOR AND ROOF DECK WELDING MAY HAVE PERIODIC INSPECTION.
- WELDED STUDS USED FOR DIAPHRAGM OR COMPOSITE CONSTRUCTION MAY HAVE PERIODIC INSPECTION.
- WELDED SHEET STEEL FOR COLD FORMED STEEL FRAMING MAY HAVE PERIODIC INSPECTION.
- WELDED STAIRS AND RAILING SYSTEMS MAY HAVE PERIODIC INSPECTION.

AUTOMATIC END – WELDED STUDS
- THE SPECIAL INSPECTOR SHALL VERIFY THE FOLLOWING WITH THE MANUFACTURER'S RECOMMENDATIONS AND PROJECT SPECIFICATIONS. RECORD THE INSTALLATION IN THE INSPECTION REPORT:

1. STUD TYPE, SIZE, AND CLEARANCES TO EDGES AND ADJACENT STUDS.
2. TYPE OF WELDING EQUIPMENT.
3. WELDER'S QUALIFICATIONS.
4. WELDING PROCEDURE.
5. WELD JOINT PREPARATION.

- PERIODICALLY INSPECT INSTALLATION OF STUDS.
- TEST STUDS PER THE REQUIREMENTS OF AWS D1.1, AISC 360, AND THE STUD'S ICC REPORT. PERFORM TORQUE TEST FOR TYPE A STUDS AND BEND TESTS FOR TYPE B STUDS.
- TEST STUDS WITH THE FOLLOWING FREQUENCY:

1. AT THE BEGINNING OF EACH DAY'S WORK, A MINIMUM OF TWO TEST STUD WELDS SHALL BE MADE WITH THE EQUIPMENT TO BE USED TO METAL WHICH IS THE SAME AS ACTUAL WORK PIECE.
2. AT ANY CHANGE IN WELDING SETUP OR PERSONNEL, RETEST TWO STUDS PRIOR TO PRODUCTION WORK.

WOOD FRAMING

PLYWOOD DIAPHRAGMS & SHEARWALLS
- PERIODICALLY INSPECT INSTALLATION OF ANY DIAPHRAGMS & SHEARWALLS, PORTION REQUIRING TWO ROW OR THREE ROW NAILING/STAPLING, OR NAILING/STAPLING @ 4" OC OR LESS, INCLUDING NAILING OF PLYWOOD, BOLTING OF ANCHORS & HOLDOWNS, & NAILING OF STRAPS.

ARCHITECTURALLY EXPOSED STEEL

1. WORK SHALL CONFORM TO THE A.I.S.C. STEEL CONSTRUCTION MANUAL 13TH EDITION SECTION 10,"ARCHITECTURALLY EXPOSED STRUCTURAL STEEL" U.N.O.
2. ALL STEEL MEMBERS, CONNECTIONS ETC., SHALL BE CONSIDERED AS "ARCHITECTURALLY EXPOSED STRUCTURAL STEEL (A.E.S.S.)" IF EXPOSED TO VIEW PER PLANS.
3. ERECTION MARKS AND AIDS SHALL NOT BE MADE ON THOSE SURFACES THAT ARE TO BE EXPOSED TO VIEW IN THE COMPLETED STRUCTURE.
4. ERECTION AID BOLTS SHALL BE REMOVED AFTER ALL STRUCTURAL STEEL WORK IS COMPLETE AND ERECTION AID HOLE FILLED WITH PLASTIC STEEL PUTTY TO A.E.S.S. APPEARANCE.
5. SEAMS OF HOLLOW STRUCTURAL SECTIONS SHALL BE ORIENTED AWAY FROM THE PRIMARY POINT OF VIEW, AND IN A CONSISTENT PATTERN, U.N.O.
6. STRUCTURAL BOLT PLACEMENT SHALL BE ORIENTED IN THE SAME DIRECTION AND IN A CONSISTENT PATTERN. RANDOM PLACEMENT IS NOT ACCEPTABLE.
7. FIELD WELDING OF MISPLACED BOLTS WILL NOT BE ACCEPTABLE.
8. UNPLANNED SPLICES ON ANY MEMBERS SHALL BE SUBMITTED TO ARCHITECT OF RECORD FOR REVIEW PRIOR TO PERFORMING ANY WORK ON CONNECTION OF SPLICES.

PROJECT DESCRIPTION

LEVELS: SINGLE STORY WITH MULTIPLE ROOF LEVELS

FOUNDATION: CONTINUOUS GRADE BEAMS AND ISOLATED COLUMN FOUNDATIONS & CONCRETE SLAB ON GRADE

ROOF SYSTEM: STEEL DECK OVER OPEN WEB STEEL JOISTS & STEEL GIRDER AT GYM. PLYWOOD OVER WOOD I JOISTS TYPICAL

LATERAL FORCE RESISTING SYSTEM: LIGHT FRAME WOOD SHEARWALLS

DIAPHRAGMS: STEEL DECK & PLYWOOD DIAPHRAGMS

CHORDS & COLLECTORS: STEEL LEDGERS AT GYM AND WOOD LEDGERS TYPICAL

STRUCTURAL OBSERVATION

REQUIRED OBSERVATION BY THE STRUCTURAL ENGINEER OF RECORD
1. FOUNDATION REINFORCING.
2. STEEL ERECTION.
3. ROUGH FRAMING, TRUSSES AND JOISTS.
4. STEEL DECK PLACEMENT, PRIOR TO CONCRETE TOPPING.
5. PLYWOOD SHEATHING AND NAILING.

CONTRACTOR SHALL NOTIFY ENGINEER A MINIMUM OF 2 WORKING DAYS PRIOR TO THE TIME WHEN HIS PRESENCE IS REQUIRED. PLEASE NOTE THAT THESE OBSERVATIONS ARE INDEPENDENT OF INSPECTIONS REQUIRED BY THE BUILDING DEPARTMENT.

STRUCTURAL DEFERRED SUBMITTALS

1. THE FOLLOWING ITEMS SHALL BE SUBMITTED FOR DEFERRED APPROVAL BY THE ENFORCEMENT AGENCY PRIOR TO FABRICATION OR INSTALLATION.
2. SEE THE SPECIFICATIONS AND STRUCTURAL DESIGN CRITERIA FOR REQUIRED PERFORMANCE AND LOADING CRITERIA.
3. DEFERRED SUBMITTALS ARE SUBJECT TO ALL THE REQUIREMENTS OF OTHER SUBMITTALS.
4. SUBMITTAL DOCUMENTS AND SUPPORTING DESIGN CALCULATIONS SHALL BE STAMPED AND SIGNED BY A CALIFORNIA REGISTERED PROFESSIONAL ENGINEER.
5. DOCUMENTS AND CALCULATIONS FOR DEFERRED SUBMITTAL ITEMS SHALL BE SUBMITTED TO THE ENGINEER FOR REVIEW FOR GENERAL CONFORMANCE WITH THE DESIGN OF THE PROJECT PRIOR TO SUBMITTAL TO THE ENFORCEMENT AGENCY.
6. DEFERRED SUBMITTAL ITEMS SHALL NOT BE FABRICATED OR INSTALLED UNTIL THEIR DESIGN AND SUBMITTAL DOCUMENTS HAVE BEEN APPROVED BY THE ENFORCEMENT AGENCY.

LIST OF DEFERRED SUBMITTALS:
1. WINDOW WALL SYSTEMS/STOREFRONTS
2. OPEN WEB STEEL JOISTS
3. PREFABRICATED WOOD I-JOISTS

ABBREVIATIONS

@	AT
ø	DIAMETER
#	NUMBER
AB	ANCHOR BOLT
ACI	AMERICAN CONCRETE INSTITUTE
AESS	ARCHITECTURALLY EXPOSED STRUCTURAL STEEL
ALT	ALTERNATE
APPROX	APPROXIMATE(LY)
ARCH	ARCHITECT(URAL)
BLDG	BUILDING
BLK	BLOCK
BLKG	BLOCKING
BM	BEAM
BN	BOUNDARY NAILING
BOF	BOTTOM OF FOOTING
BOT	BOTTOM
BVC	BEGIN VERTICAL CURVE
C-C	CENTER TO CENTER
CL	CENTERLINE
CF	CUBIC FOOT
CIDH	CAST IN DRILLED HOLE
CIP	CAST IRON PIPE
CJ	CONSTRUCTION JOINT
CJP	COMPLETE JOINT PENETRATION
CLG	CEILING
CLR	CLEAR. CLEARANCE
CMP	CORRUGATED STEEL PIPE
CMU	CONCRETE MASONRY UNIT
COL	COLUMN
CONC	CONCRETE
CONN	CONNECTION
CONST	CONSTRUCTION
CONT	CONTINUOUS
COORD	COORDINATE
CSK	COUNTERSINK
CY	CUBIC YARD
DBL	DOUBLE
DCW	DEMAND CRITICAL WELD
DET	DETAIL
DF	DOUGLAS FIR
DIAG	DIAGONAL
Ø	DIAMETER
DIST	DISTANCE
DL	DEAD LOAD
DN	DOWN
DO	DITTO
DWG	DRAWING
(E)	EXISTING
EA	EACH
EC	END HORIZONTAL CURVE
ECR	END CURB RETURN
EL	ELEVATION
ELEV	ELEVATOR
EMB	EMBANKMENT
EN	EDGE NAILING
EQ	EQUAL
EVC	END VERTICAL CURVE
EW	EACH WAY
EXIST	EXISTING
EXP	EXPRESSWAY
FBC	FRAMED BEAM CONNECTION
FG	FINISHED GRADE
FIN	FINISH(ED)
FL	FLOW LINE
FND	FOUNDATION
FN	FIELD NAILING
FOC	FACE OF CONCRETE
FOHC	FREE OF HEART CENTER
FOS	FACE OF STUD(S)
FP	FULL PENETRATION
FS	FAR SIDE
FTG	FOOTING
Ga	GAUGE
GALV	GALVANIZED
GLB	GLUE LAMINATED BEAM
H or HT	HEIGHT
HDR	HEADER
HGR	HANGER
HORIZ	HORIZONTAL
HS	HIGH STRENGTH
HSB	HIGH STRENGTH BOLT
HSS	HOLLOW STRUCTURAL SECTION
ID	INSIDE DIAMETER
INSP	INSPECTION/INSPECTOR
INSUL	INSULATION
JT	JOINT
KIPS	ONE THOUSAND POUNDS
LBS	POUNDS
LF	LINEAR FOOT
LGS	LIGHT GAUGE STEEL
LL	LIVE LOAD
LLBB	LONG LEGS BACK TO BACK
LLH	LONG LEG HORIZONTAL
LLV	LONG LEG VERTICAL
LOC	LOCATION

LOL	LAYOUT LINE
LONGIT	LONGITUDINAL
LS	LAG SCREW(S)
LT	LEFT
LW	LIGHT WEIGHT
MAX	MAXIMUM
MB	MACHINE BOLT(S)
MECH	MECHANICAL
MFR	MANUFACTURER
MIN	MINIMUM, MINUTES
MISC	MISCELLANEOUS
MOD	MODIFIED OR MODIFY
(N)	NEW
NIC	NOT IN CONTRACT
No.	NUMBER
Ø	NOMINAL DIAMETER
NOM	NOMINAL
NS	NEAR SIDE
NTS	NOT TO SCALE
O.C.	ON CENTER
OD	OUTSIDE DIAMETER
OG	ORIGINAL GROUND
OH	OPPOSITE HAND
OPP	OPPOSITE
OWSJ	OPEN WEB STEEL JOIST
PL	STEEL PLATE
PC	POINT OF CURVATURE
PCC	POINT OF COMPOUND CURVE OR PORTLAND CEMENT CONCRETE
PCP	PERFORATED CONCRETE PIPE
PCVC	POINT OF COMPOUND VERTICAL CURVE
PDF	POWDER DRIVEN FASTENER
PG	PROFILE GRADE
PI	POINT OF INTERSECTION
PJP	PARTIAL JOINT PENETRATION
P/L	PROPERTY LINE
PL	PLATE
PLY	PLYWOOD
POC	POINT ON HORIZONTAL CURVE
POT	POINT ON TANGENT
POVC	POINT ON VERTICAL CURVE
PRC	POINT OF REVERSE CURVE
PRVC	POINT OF REVERSE VERTICAL CURVE
PSF	POUNDS PER SQUARE FOOT
PSI	POUNDS PER SQUARE INCH
PT	POINT OR POST TENSION
PTDF	PRESSURE TREATED DOUGLAS FIR
PVC	POLYVINYL CHLORIDE
RAD or R	RADIUS
RCP	REINFORCED CONCRETE PIPE
REINF	REINFORCED, REINFORCING
REQ'D	REQUIRED
REV	REVISION
RS	ROUGH SAWN
RT	RIGHT
RW	RETAINING WALL
RWD	REDWOOD
R/W	RIGHT OF WAY
SAD	SEE ARCHITECTURAL DRAWINGS
SCHED	SCHEDULE
SEC	SECTION
SHT	SHEET
SHTG	SHEATHING
SIM	SIMILAR
SLRS	SEISMIC LOAD RESISTING SYSTEM
SM	SHEET STEEL
SMS	SHEET STEEL SCREW
SPEC(S)	SPECIFICATION(S)
SQ	SQUARE
SQFT	SQUARE FOOT
SQYD	SQUARE YARD
STAG	STAGGERED
STD	STANDARD
STL	STEEL
STRUCT	STRUCTURAL
STS	SELF TAPPING SCREW
SYM	SYMMETRICAL
T&G	TONGUE AND GROOVE
TBR	TO BE REMOVED
TEMP	TEMPORARY
TO	TOP OF
TOF	TOP OF FOOTING/FRAMING
TOP	TOP OF PLATE
TOS	TOP OF SLAB OR STEEL
TOW	TOP OF WALL
TRANS	TRANSVERSE
TYP	TYPICAL
U.N.O.	UNLESS NOTED OTHERWISE
VC	VERTICAL CURVE
VERT	VERTICAL
W/	WITH
WF	WIDE FLANGE
WP	WATERPROOF or WORKPOINT
WT	WEIGHT
WWF	WELDED WIRE FABRIC

SUBMITTALS

SUBMITTALS FOR THE ENGINEERS REVIEW WILL BE REQUIRED AS FOLLOWS:
1. REINFORCING STEEL SHOP DRAWINGS
2. MIX DESIGNS
3. STRUCTURAL STEEL AND MISCELLANEOUS METALS SHOP DRAWINGS
4. WELDING PROCEDURE SPECIFICATIONS (AND PQR IF APPLICABLE)
5. STEEL DECK SHOP DRAWINGS
6. OPEN WEB STEEL JOIST SHOP DRAWINGS AND CALCULATIONS
7. LAMINATED MEMBERS SHOP DRAWINGS
8. PREFABRICATED WOOD I-JOIST SHOP DRAWINGS & CALCULATIONS

NOTES:
1. CONTRACTOR SHALL ELECTRONICALLY SUBMIT SUBMITTALS FOR REVIEW OR SHALL SUBMIT A MINIMUM OF TWO SETS OF HARD PRINTS FOR REVIEW.
2. THE GENERAL CONTRACTOR SHALL REVIEW EACH SUBMITTAL PRIOR TO FORWARDING TO ARCHITECT AND STRUCTURAL ENGINEER. THE GENERAL CONTRACTOR SHALL VERIFY THAT THE SHOP DRAWING IS COORDINATED AMONG ALL CONSTRUCTION TRADES AND THAT THE ARCHITECT'S AND STRUCTURAL ENGINEER'S COMMENTS FROM ANY PREVIOUS SUBMITTALS ARE ADDRESSED.
3. CONTRACTOR SHALL SUBMIT IN WRITING, ANY REQUEST FOR MODIFICATIONS TO THE PLANS AND SPECIFICATIONS. SHOP DRAWINGS SUBMITTED FOR REVIEW DO NOT CONSTITUTE "IN WRITING" UNLESS IT IS CLEARLY NOTED THAT SPECIFIC CHANGES ARE BEING REQUESTED.
4. REVISIONS FROM PREVIOUS SUBMITTALS SHALL BE CLEARLY MARKED BY CLOUDS.
5. FABRICATION SHALL NOT PROCEED UNTIL SUBMITTALS HAVE BEEN REVIEWED BY THE ENGINEER.

CONTRACTOR'S STATEMENT OF RESPONSIBILTY

EACH CONTRACTOR RESPONSIBLE FOR THE CONSTRUCTION OF A SEISMIC OR WIND-FORCE RESISTING SYSTEM OR COMPONENT SHALL ISSUE A WRITTEN STATEMENT OF RESPONSIBILITY IN COMPLIANCE WITH SECTION 1704.4 OF THE CURRENT GOVERNING EDITION OF THE CALIFORNIA BUILDING CODE. THE CONTRACTORS STATEMENT OF RESPONSIBILITY SHALL CONTAIN ACKNOWLEDGEMENT OF AWARENESS OF THE SPECIAL REQUIREMENTS CONTAINED IN THE STATEMENT OF SPECIAL INSPECTION.

rrm design group
rrmdesign.com | (805) 543-1794
3765 SOUTH HIGUERA STREET, SUITE 102
SAN LUIS OBISPO, CA 93401

THE INCLUDED DRAWINGS, SPECIFICATIONS, IDEAS, DESIGNS AND ARRANGEMENTS REPRESENTED THEREBY ARE AND SHALL REMAIN THE PROPERTY OF RRM DESIGN GROUP AND NO PART THEREOF SHALL BE COPIED, DISCLOSED TO OTHERS OR USED IN CONNECTION WITH ANY WORK OR PROJECT OTHER THAN THE SPECIFIED PROJECT FOR WHICH THEY HAVE BEEN PREPARED AND DEVELOPED WITHOUT THE WRITTEN CONSENT OF RRM DESIGN GROUP. VISUAL CONTACT WITH THESE DRAWINGS OR SPECIFICATIONS SHALL CONSTITUTE CONCLUSIVE EVIDENCE OF ACCEPTANCE OF THESE RESTRICTIONS. SUBMITTAL OF THESE DOCUMENTS FOR PUBLIC AGENCY REVIEW SHALL NOT BE CONSIDERED A WAIVER OF RRM DESIGN GROUP'S RIGHTS.
RRM DESIGN GROUP COPYRIGHT 2023
RRM IS A CALIFORNIA CORPORATION

REGISTERED PROFESSIONAL ENGINEER
DUSTIN G. LEE
No. S6623
EXP. 3/31/25
STRUCTURAL
STATE OF CALIFORNIA

CONSULTANT

CORNERSTONE
structural engineering group
986 W. Alluvial, Suite 201
Fresno, California 93711
559.320.3200
fax 559.320.3201

AGENCY

PORTERVILLE COMMUNITY CENTER

N 4TH ST, PORTERVILLE, CA 93257

TESTING & SPECIAL INSPECTION

NO.	REVISION	DATE
△		
△		
△		
△		
△		
△		

PROJECT MANAGER

DRAWN BY | CHECKED BY

DATE
09.10.24

PROJECT NUMBER
2883-01-RC22

SHEET
S-002

CONSTRUCTION DOCUMENTS

9/10/2024 2:24:58 PM
\\cseg-fr-fs01\frhome$\markw\Porterville_2022_Structural_danderson@cseg.com.rvt

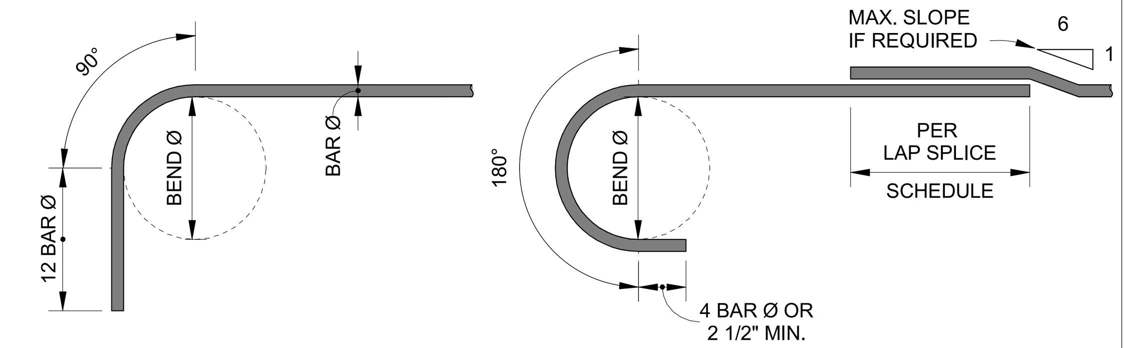

BAR SIZE	MIN. BEND Ø
#3 THRU #8	6 BAR Ø
#9 THRU #11	8 BAR Ø

MAIN REINFORCEMENT

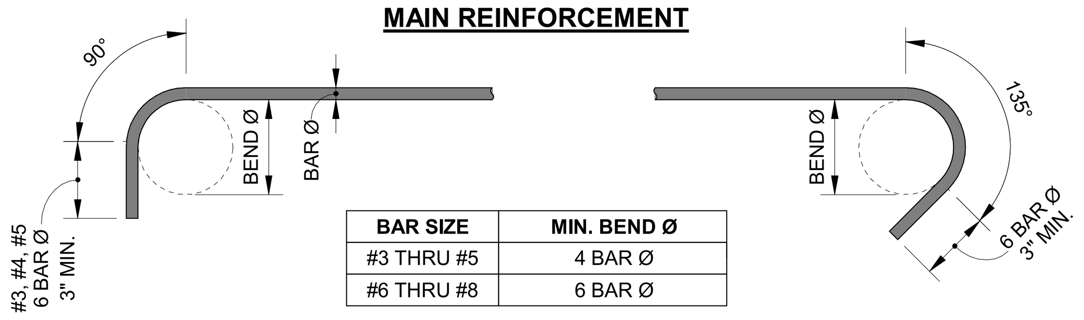

BAR SIZE	MIN. BEND Ø
#3 THRU #5	4 BAR Ø
#6 THRU #8	6 BAR Ø

STIRRUPS & TIES

REINFORCING BAR HOOKS
1 / S-101
NO SCALE

MINIMUM CONCRETE COVER SCHEDULE

ELEMENT	CLEAR COVER
CONCRETE CAST AGAINST AND PERMANENTLY EXPOSED TO EARTH	3"
CONCRETE EXPOSED TO EARTH OR WEATHER:	
#5 AND SMALLER	1 1/2"
#6 AND LARGER	2"
CONCRETE NOT EXPOSED TO WEATHER OR IN CONTACT WITH GROUND:	
SLABS, WALLS & JOISTS:	
#11 AND SMALLER	3/4"
#14 AND #18	1 1/2"
BEAMS & COLUMNS	
PRIMARY REINFORCEMENT, TIES, STIRRUPS, & SPIRALS	1 1/2"
SHELLS & FOLDED PLATE MEMBERS	
#5 AND SMALLER	1/2"
#6 AND LARGER	3/4"

NOTES:
1. COVERS NOTED SHALL BE USED UNLESS NOTED OTHERWISE ON THE CONTRACT DOCUMENTS.
2. COVERS NOTED ARE FOR CAST-IN-PLACE, NON-PRESTRESSED MEMBERS.
3. MINIMUM CLEAR COVER FOR BUNDLED BARS SHALL BE THE LESSER OF THE EQUIVALENT DIAMETER OF THE BUNDLE AND 2".

MINIMUM CONCRETE COVER SCHEDULE
2 / S-101
NO SCALE

MINIMUM LAP SPLICE SCHEDULE

BAR SIZE	POSITION	F'c ≤ 3500 PSI		F'c = 4000 PSI	
		CLASS A	CLASS B	CLASS A	CLASS B
#3	TOP	24	28	24	25
	BOTTOM	24	24	24	24
#4	TOP	29	38	25	33
	BOTTOM	24	29	24	25
#5	TOP	36	47	31	41
	BOTTOM	28	36	24	31
#6	TOP	43	56	37	49
	BOTTOM	33	43	29	37
#7	TOP	63	81	54	71
	BOTTOM	48	63	42	54
#8	TOP	72	93	62	81
	BOTTOM	55	72	48	62
#9	TOP	81	105	70	91
	BOTTOM	62	81	54	70
#10	TOP	91	118	79	102
	BOTTOM	70	91	61	79
#11	TOP	101	131	87	114
	BOTTOM	78	101	67	87

NOTES:
1. LAP SPLICE LOCATIONS SHALL BE APPROVED BY THE ENGINEER.
2. LAP SPLICES SHALL BE CONTACT (CLASS B) FOR CAST-IN-PLACE CONCRETE UNLESS NOTED OTHERWISE.
3. TOP BARS ARE HORIZONTAL BARS WITH 12 INCHES OR MORE OF FRESH CONCRETE BELOW THE BAR.
4. WHEN TWO BARS OF DIFFERENT SIZE ARE SPLICED, USE THE LARGER LAP LENGTH.
5. STAGGER LAP SPLICES WHERE POSSIBLE. WHERE CLASS A SPLICES ARE CALLED OUT ON THE DRAWINGS, STAGGER LAP SPLICES 24 INCHES FOR ADJACENT BARS.
6. LAP SPLICES NOTED ARE FOR NORMAL WEIGHT CONCRETE. LAP SPLICE LENGTHS SHALL BE MULTIPLIED BY 1.3 FOR LIGHTWEIGHT CONCRETE.
7. NO SPLICES ARE ALLOWED FOR #14 AND #18 REINFORCEMENT.
8. BAR DEVELOPMENT LENGTHS EQUAL CLASS A LAP SPLICE LENGTHS.
9. ENTIRE BUNDLED BARS SHALL NOT BE LAP SPLICED. LAP SPLICES OF INDIVIDUAL BARS WITHIN THE BUNDLE SHALL NOT OVERLAP.
10. AT CONTRACTOR'S OPTION, MECHANICAL COUPLERS MAY BE SUBSTITUTED FOR LAP SPLICES. MECHANICAL COUPLERS SHALL HAVE AN ICC REPORT AND SHALL DEVELOP 125% OF THE YIELD STRENGTH OF THE BAR.

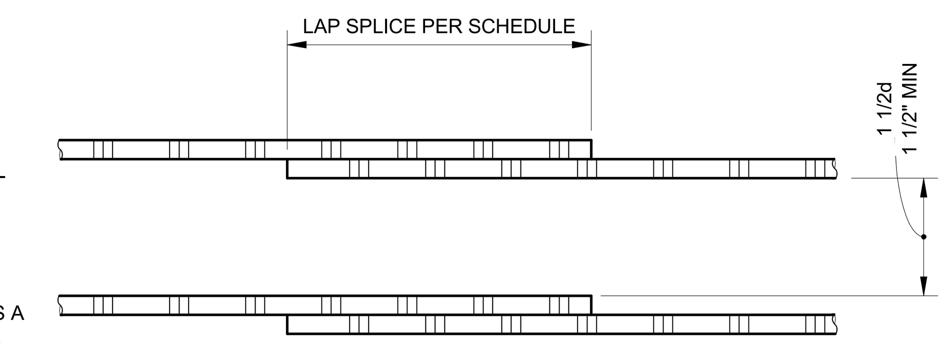

CONTACT SPLICE

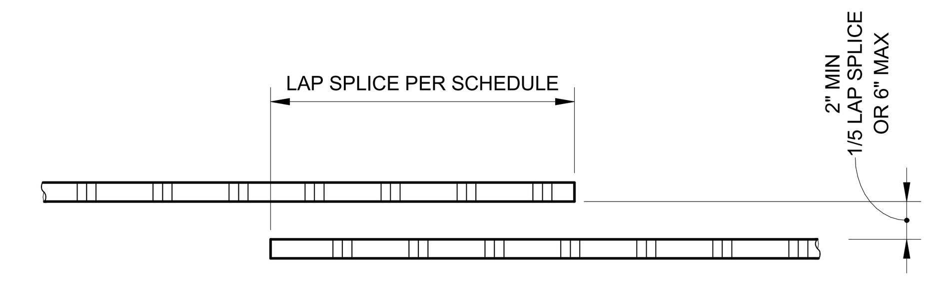

NON - CONTACT SPLICE

LAP SPLICE SCHEDULE FOR CONCRETE
3 / S-101
NO SCALE

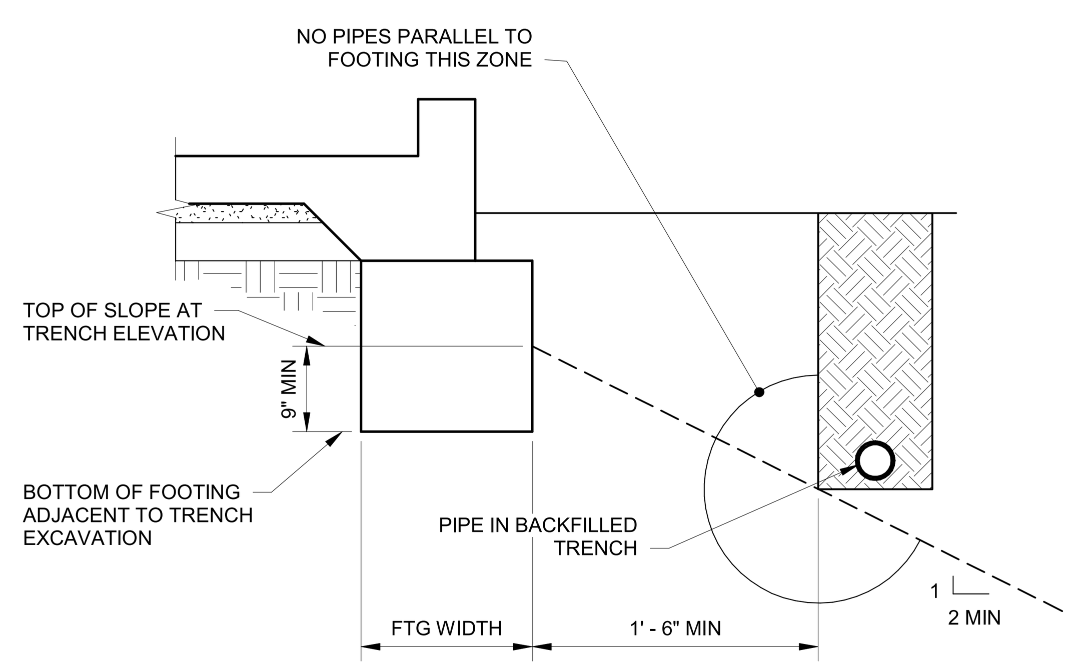

EXCAVATION PARALLEL TO FTG
4 / S-101
NO SCALE

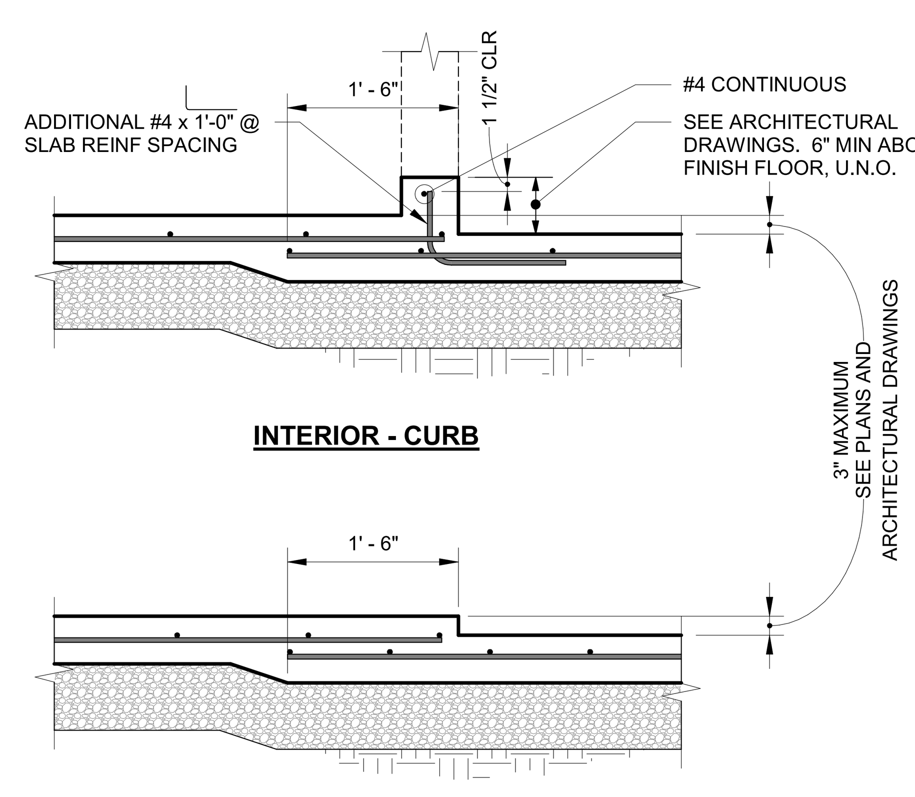

INTERIOR - CURB

INTERIOR - NO CURB

SLAB DEPRESSION
5 / S-101
NO SCALE

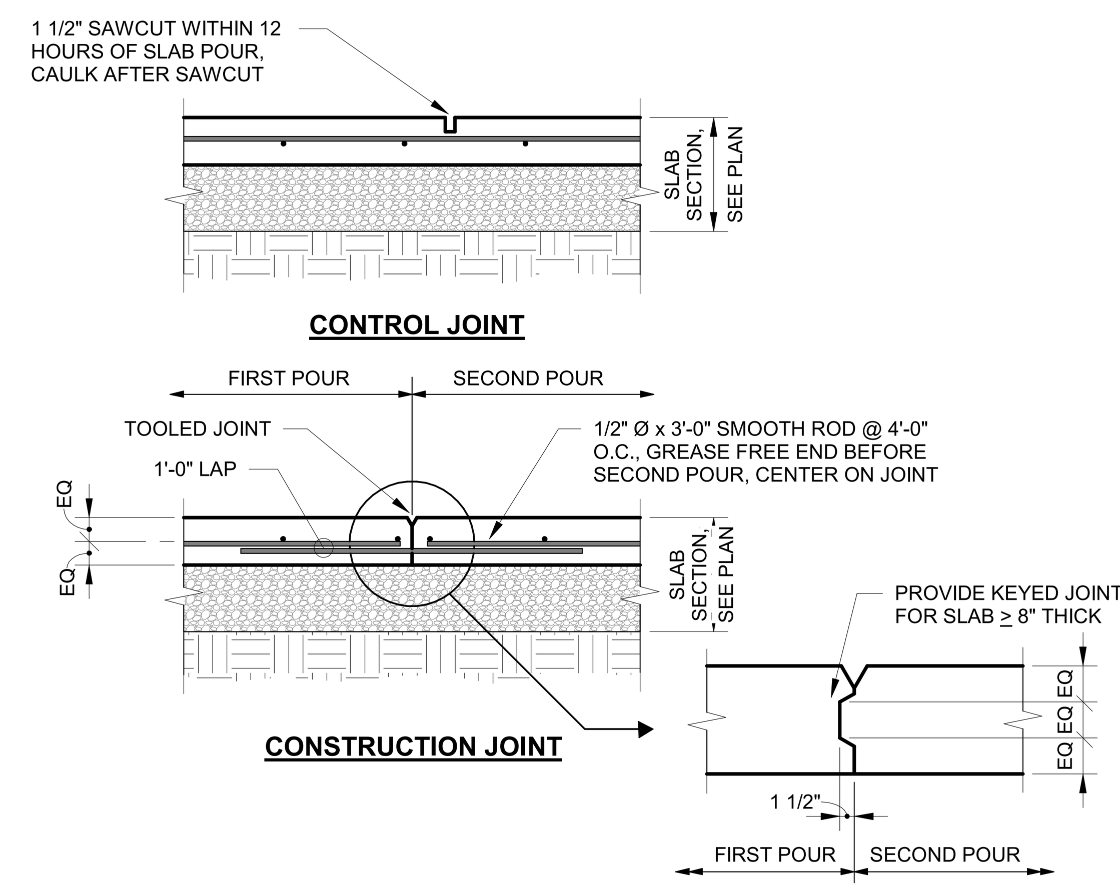

CONSTRUCTION JOINT

SLAB JOINT
6 / S-101
NO SCALE

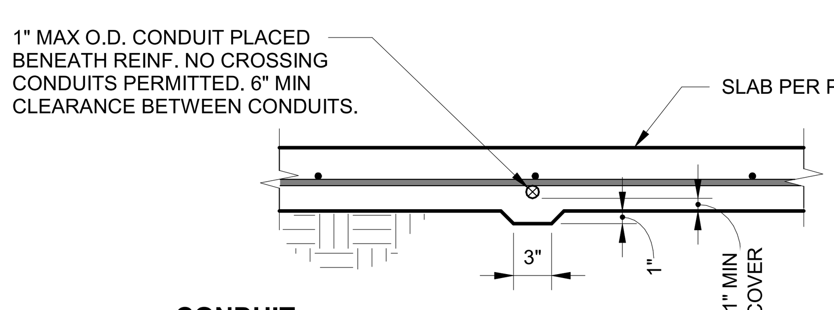

CONDUIT

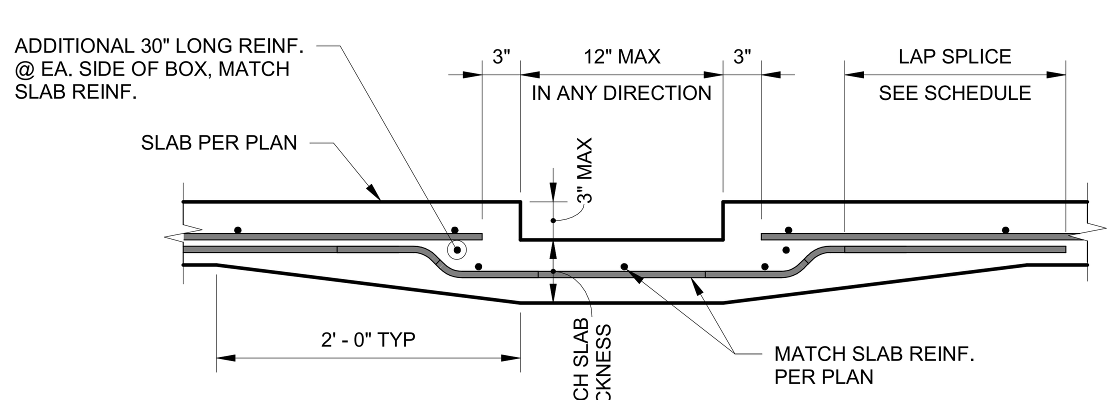

RECESSED BOX

NOTE:
SEAL ALL PENETRATIONS THROUGH VAPOR BARRIER AND PATCH ALL PUNCTURES AND CUTS PRIOR TO PLACING CONCRETE.

CONDUITS AND BOXES IN SLAB
7 / S-101
1" = 1'-0"

NOTES:
1. ON-SITE SOILS ARE CONSIDERED SUITABLE FOR USE AS GENERAL ENGINEERED FILL, PROVIDED THEY DO NOT CONTAIN DELETERIOUS MATTER, ORGANIC MATERIAL, OR MATERIAL LARGER THAN 3 INCHES IN MAXIMUM DIMENSION.
2. REFER TO SOILS REPORT "GEOTECHINICAL INVESTIGATION" PROJECT NUMBER: 22-18633 BY SOILS ENGINEERING, INC. DATED JANUARY 13, 2023 FOR MORE INFORMATION.

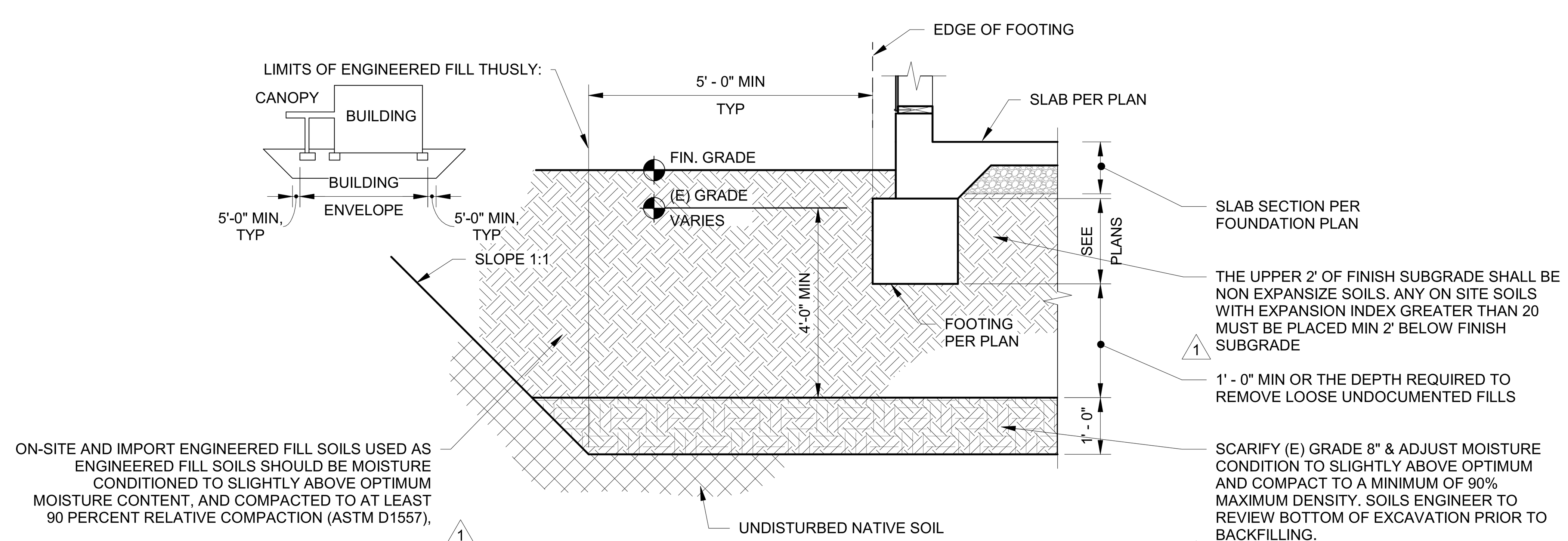

BUILDING PAD PREPARATION
8 / S-101
1/2" = 1'-0"

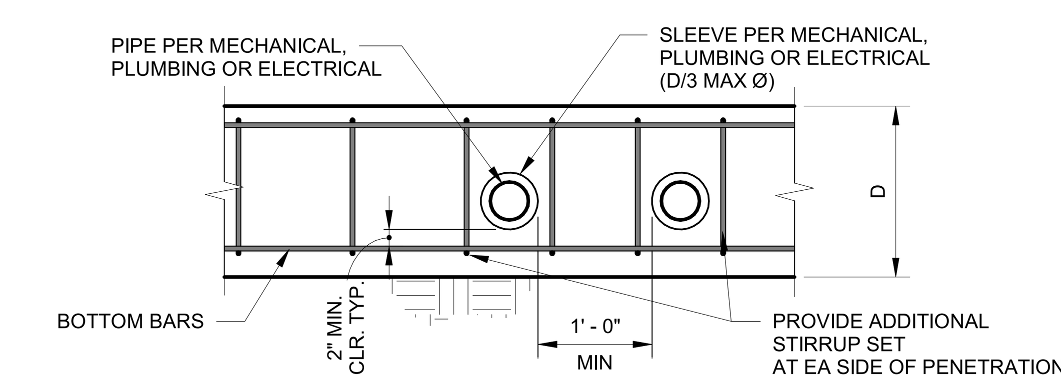

CLEAR OF TOP & BOTTOM REINFORCING

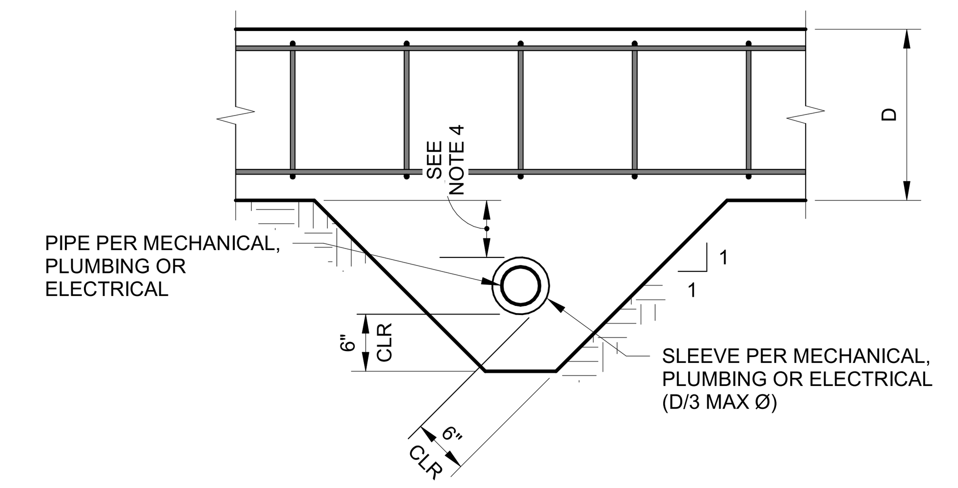

BELOW BOTTOM REINFORCING

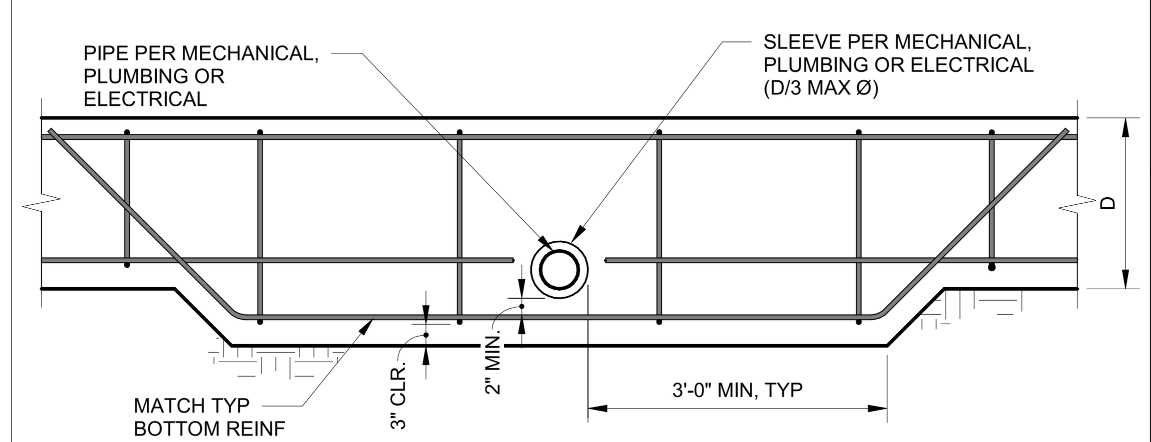

AT BOTTOM REINFORCING

NOTES:
1. SLEEVE ID 2" LARGER THAN PIPE OD OR BELL OD.
2. SEAL VOID BETWEEN PIPE AND SLEEVE WITH ELASTIC WATERPROOF MATERIAL, TYP.
3. DETAIL APPLICABLE TO MAXIMUM 8"Ø SLEEVE.
4. NO FTG EXTENSION REQ'D FOR PIPE DEEPER THAN 12" BELOW FTG (SLEEVE STILL REQ'D).
5. WHERE PENETRATION CONFLICTS WITH REBAR TIE, OMIT TIE & PROVIDE 1 ADDITIONAL TIE EACH SIDE OF SLEEVE.

FOOTING PENETRATIONS
9 / S-101
NO SCALE

rrm design group
rrmdesign.com | (805) 543-1794
3765 SOUTH HIGUERA STREET, SUITE 102
SAN LUIS OBISPO, CA 93401

THE INCLUDED DRAWINGS, SPECIFICATIONS, IDEAS, DESIGNS AND ARRANGEMENTS REPRESENTED THEREBY ARE AND SHALL REMAIN THE PROPERTY OF RRM DESIGN GROUP AND NO PART THEREOF SHALL BE COPIED, DISCLOSED TO OTHERS OR USED IN CONNECTION WITH ANY WORK OR PROJECT OTHER THAN THE SPECIFIED PROJECT FOR WHICH THEY HAVE BEEN PREPARED AND DEVELOPED WITHOUT THE WRITTEN CONSENT OF RRM DESIGN GROUP. VISUAL CONTACT WITH THESE DRAWINGS OR SPECIFICATIONS SHALL CONSTITUTE CONCLUSIVE EVIDENCE OF ACCEPTANCE OF THESE RESTRICTIONS. SUBMITTAL OF THESE DOCUMENTS FOR PUBLIC AGENCY REVIEW SHALL NOT BE CONSIDERED A WAIVER OF RRM DESIGN GROUP'S RIGHTS.
RRM DESIGN GROUP COPYRIGHT 2023
RRM IS A CALIFORNIA CORPORATION

REGISTERED PROFESSIONAL ENGINEER
DUSTIN G. LEE
No. S6623
EXP. 3/31/25
STRUCTURAL
STATE OF CALIFORNIA

CONSULTANT

CORNERSTONE
structural engineering group
986 W. Alluvial, Suite 201
Fresno, California 93711
559.320.3200
fax 559.320.3201

AGENCY

PORTERVILLE COMMUNITY CENTER
N 4TH ST, PORTERVILLE, CA 93257

TYPICAL DETAILS No. 1

NO.	REVISION	DATE
1	Plan Check Revision 1	5/17/24

PROJECT MANAGER

DRAWN BY | CHECKED BY

DATE
09.10.24

PROJECT NUMBER
2883-01-RC22

SHEET
S-101

CONSTRUCTION DOCUMENTS

9/10/2024 2:24:59 PM
\\cseg-fr-fs01\frhome$\markw\Porterville_2022_Structural_danderson@cseg.com.rvt

FOUNDATION CONCRETE MAY BE PLACED DIRECTLY INTO NEAT EXCAVATIONS PROVIDED THE FOUNDATION TRENCH WALLS ARE STABLE AS DETERMINED BY THE SOILS ENGINEER.

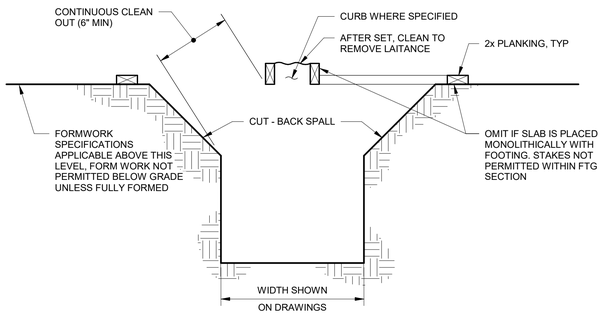

MANDATORY MIN FORMWORK (UNLESS FULLY FORMED)

FORMING DETAIL

1" = 1'-0"

1 / S-102

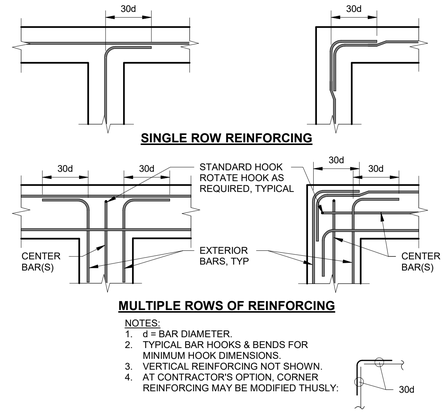

NOTES:
1. d = BAR DIAMETER.
2. TYPICAL BAR HOOKS & BENDS FOR MINIMUM HOOK DIMENSIONS.
3. VERTICAL REINFORCING NOT SHOWN.
4. AT CONTRACTOR'S OPTION, CORNER REINFORCING MAY BE MODIFIED THUSLY:

FOOTING, WALL & CURB INTERSECTIONS

3/4" = 1'-0"

2 / S-102

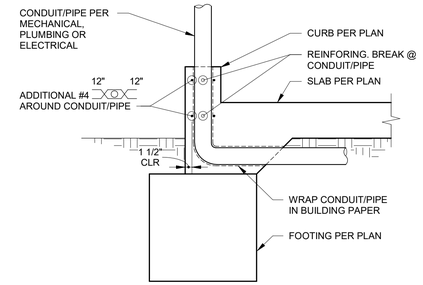

CURB PENETRATION

3/4" = 1'-0"

3 / S-102

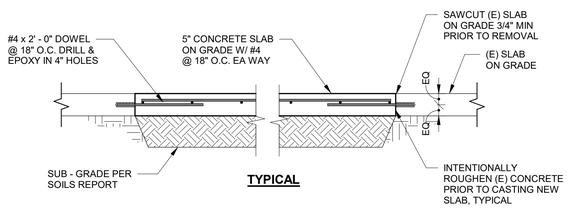

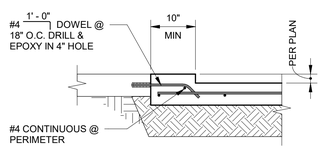

SLAB INFILL

NO SCALE

4 / S-102

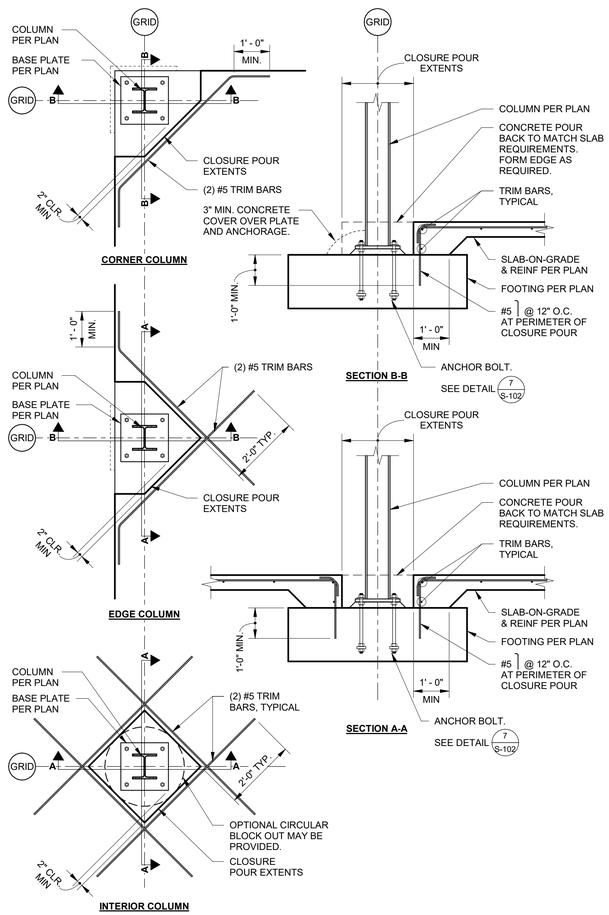

CLOSURE POUR DETAIL

NO SCALE

6 / S-102

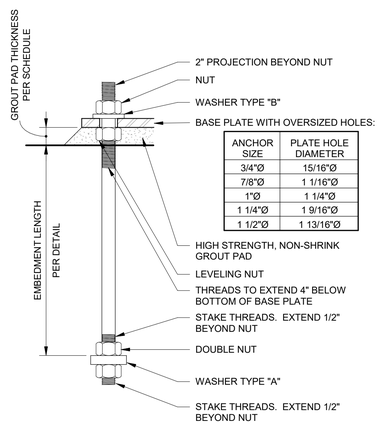

ANCHOR SIZE	PLATE HOLE DIAMETER
3/4"Ø	15/16"Ø
7/8"Ø	1 1/16"Ø
1"Ø	1 1/4"Ø
1 1/4"Ø	1 9/16"Ø
1 1/2"Ø	1 13/16"Ø

ANCHOR ROD		WASHER [1]		HEX NUT	GROUT PAD THICKNESS
SIZE	MATERIAL	TYPE	SIZE		
3/4"Ø	F1554 GRADE 36	A	3"x1/2"x0'-3" PLATE W/ 13/16"Ø HOLE CENTERED	ASTM A563	1.5"
		B [2]	2"x1/4" PLATE* W/ 13/16"Ø HOLE CENTERED		
7/8"Ø	F1554 GRADE 36	A	3"x3/4"x0'-3" PLATE W/ 15/16"Ø HOLE CENTERED	ASTM A563	1.5"
		B [2]	2 1/2"x5/16" PLATE* W/ 15/16"Ø HOLE CENTERED		
1"Ø	F1554 GRADE 36	A	3"x3/4"x0'-3" PLATE W/ 1 1/16"Ø HOLE CENTERED	ASTM A563	1.5"
		B [2]	3"x3/8" PLATE* W/ 1 1/16"Ø HOLE CENTERED		
1 1/4"Ø	F1554 GRADE 36	A	3 1/2"x1"x0'-3 1/2" PLATE W/ 1 5/16"Ø HOLE CENTERED	ASTM A563	2"
		B [2]	3"x1/2" PLATE* W/ 1 5/16"Ø HOLE CENTERED		
1 1/2"Ø	F1554 GRADE 36	A	4"x1"x0'-4" PLATE W/ 1 9/16"Ø HOLE CENTERED	ASTM A563	2"
		B [2]	3 1/2"x1/2" PLATE* W/ 1 9/16"Ø HOLE CENTERED		

1. CIRCULAR OR SQUARE WASHERS MEETING THE WASHER SIZE ARE ACCEPTIBLE.
2. OVERSIZED HOLE MAY BE PROVIDED IN BASE PLATE. FOR ADDITIONAL INFORMATION WHERE OVERSIZED HOLES OCCUR, SEE DETAIL 9 X2.02

ANCHOR BOLT

NO SCALE

7 / S-102

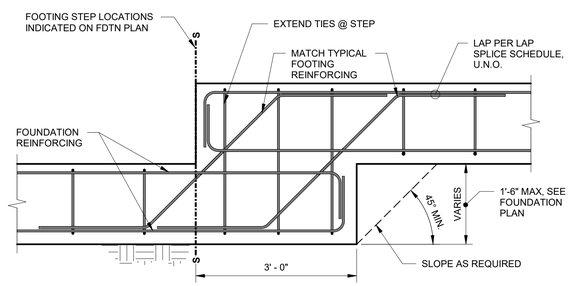

FOOTING STEP

3/4" = 1'-0"

5 / S-102

rrm design group
rrmdesign.com | (805) 543-1794
3765 SOUTH HIGUERA STREET, SUITE 102
SAN LUIS OBISPO, CA 93401

THE INCLUDED DRAWINGS, SPECIFICATIONS, IDEAS, DESIGNS AND ARRANGEMENTS REPRESENTED THEREBY ARE AND SHALL REMAIN THE PROPERTY OF RRM DESIGN GROUP AND NO PART THEREOF SHALL BE COPIED, DISCLOSED TO OTHERS OR SUBSTANTIALLY UTILIZED FOR ANY PURPOSE WHATSOEVER OTHER THAN THE PROJECT FOR WHICH THEY HAVE BEEN PREPARED AND DEVELOPED WITHOUT THE WRITTEN CONSENT OF RRM DESIGN GROUP. VISUAL CONTACT WITH THESE DRAWINGS OR SPECIFICATIONS SHALL CONSTITUTE CONCLUSIVE EVIDENCE OF ACCEPTANCE OF THESE RESTRICTIONS. SUBMITTAL OF PRELIMINARY DRAWINGS FOR REVIEW SHALL NOT BE CONSIDERED A WAIVER OF RRM DESIGN GROUP'S RIGHTS.
RRM DESIGN GROUP COPYRIGHT 2023
RRM IS A CALIFORNIA CORPORATION

REGISTERED PROFESSIONAL ENGINEER
AUSTIN G. LEE
No. S6623
EXP. 3/31/25
STRUCTURAL
STATE OF CALIFORNIA

CONSULTANT

CORNERSTONE structural engineering group
986 W. Alluvial, Suite 201
Fresno, California 93711
559.320.3200
fax 559.320.3201

AGENCY

PORTERVILLE COMMUNITY CENTER
N 4TH ST, PORTERVILLE, CA 93257

TYPICAL DETAILS No. 2

NO.	REVISION	DATE

PROJECT MANAGER

DRAWN BY | CHECKED BY

DATE
09.10.24

PROJECT NUMBER
2883-01-RC22

SHEET
S-102

CONSTRUCTION DOCUMENTS

9/10/2024 2:24:59 PM
\\cseg-fs-01\Home$\markw\Porterville_2022_Structural_danderson@cseg.com.rvt

STEEL JOIST AND GIRDER NOTES

1. SEE **DESIGN CRITERIA** FOR ALL DESIGN LOADS.

2. ALL STEEL JOISTS AND JOIST GIRDERS SHALL BE AS MANUFACTURED BY VULCRAFT, OR EQUIVALENT. SEE STEEL JOIST/GIRDER SCHEDULE BELOW AND STRUCTURAL PLANS FOR SPECIFIC INFORMATION ON THE STEEL JOISTS AND JOIST GIRDERS BEING USED ON THIS PROJECT. SUBSTITUTE STEEL JOISTS AND JOIST GIRDERS MUST BE SUBMITTED AND APPROVED BY THE BUILDING DEPARTMENT AS A CHANGE ORDER PRIOR TO FABRICATION. THE CONTRACTOR SHALL BEAR ALL COSTS OF OBTAINING APPROVAL OF SUBSTITUTES, WITH NO GUARANTEE THAT THE SUBSTITUTE WILL BE ACCEPTED.

3. DESIGN, FABRICATION AND USE OF STEEL JOISTS AND JOIST GIRDERS SHALL CONFORM TO THE REQUIREMENTS OF SECTION 2207 OF THE 2022 C.B.C. AND BE IN ACCORDANCE TO ONE OF THE FOLLOWING STEEL JOIST INSTITUTE SPECIFICATIONS:
   - SJI 100
   - SJI 200

4. ALL CHORD AND WEB MATERIAL SHALL BE AS SPECIFIED IN THE LATEST MANUFACTURER'S CATALOG AND MEET ALL REQUIREMENTS IN ONE OF THE PREVIOUSLY REFERENCED STEEL JOIST INSTITUTE SPECIFICATIONS.

5. TRUSS FABRICATION SHALL OCCUR UNDER THE SUPERVISION OF A THIRD-PARTY INSPECTION AGENCY APPROVED BY THE STEEL JOIST INSTITUTE.

6. MANUFACTURER TO PROVIDE BEARING HARDWARE/ATTACHMENTS ON EACH END OF TRUSS AND AT ALL BEARING/SUPPORT LOCATIONS, WITH VERTICAL WEB MEMBERS IF NECESSARY.

7. AT COMPLETION OF FABRICATION, THE STEEL JOIST MANUFACTURER SHALL SUBMIT A CERTIFICATE OF COMPLIANCE IN ACCORDANCE WITH C.B.C. 1704.5 STATING THAT WORK WAS PERFORMED IN ACCORDANCE WITH APPROVED CONSTRUCTION DOCUMENTS AND WITH STEEL JOIST INSTITUTE STANDARD SPECIFICATIONS.

8. TRUSS MANUFACTURER'S SHOP DRAWINGS, WITH ALL REQUIREMENTS SPECIFIED IN C.B.C. 2207.4 AND DIMENSIONS, AND CALCULATIONS SHALL BE SUBMITTED TO THE ARCHITECT AND/OR STRUCTURAL ENGINEER FOR REVIEW PRIOR TO FABRICATION. THE MANUFACTURER SHALL VERIFY ALL DIMENSIONS SHOWN ON STRUCTURAL DRAWINGS WITH THE ARCHITECTURAL DRAWINGS, AND THEN VERIFY IN FIELD DIMENSIONS PRIOR TO FABRICATION.

9. STEEL JOIST AND JOIST GIRDER MANUFACTURER'S CALCULATIONS SHALL BE SIGNED BY A PROFESSIONAL ENGINEER REGISTERED IN THE STATE IN WHICH THE PROJECT IS LOCATED.

10. STEEL JOISTS AND JOIST GIRDERS SHALL BE DESIGNED FOR ALL CONCENTRATED LOADS SHOWN ON DRAWINGS IN ADDITION TO THE UNIFORM LOADINGS SHOWN IN THE **DESIGN CRITERIA**.

11. SEE STRUCTURAL, MECHANICAL AND ELECTRICAL PLANS FOR LOCATION AND WEIGHT OF MECHANICAL UNITS. COORDINATE ADDITIONAL EQUIPMENT LOADS WITH THE MECHANICAL, ELECTRICAL AND PLUMBING CONTRACTORS PRIOR TO FABRICATION.

12. ALL FLOOR AND ROOF TRUSSES SHALL BE DESIGNED TO MEET OR EXCEED C.B.C. TABLE 1604.3 REQUIREMENTS FOR MAXIMUM TOTAL LOAD DEFLECTION AND MAXIMUM LIVE, SNOW OR WIND LOAD DEFLECTION.

13. STEEL JOIST AND JOIST GIRDER DESIGNER SHALL INCORPORATE ONE 400# VERTICAL LOAD ON THE BOTTOM CHORD OF ALL JOISTS FOR SPRINKLER LINES. THE JOISTS AND JOIST GIRDERS MUST BE DESIGNED TO CARRY THOSE LOADS AT ANY POINT ON THE BOTTOM CHORD.

14. BRIDGING AND BRIDGING ANCHORS, AS REQUIRED BY THE MANUFACTURER AND STRUCTURAL DRAWINGS, SHALL BE COMPLETELY INSTALLED BEFORE CONSTRUCTION LOADS ARE PLACED ON THE JOISTS. BRIDGING SHALL SUPPORT THE TOP CHORDS AGAINST LATERAL MOVEMENT DURING THE CONSTRUCTION PERIOD.

15. THE GENERAL CONTRACTOR IS RESPONSIBLE FOR KNOWING AND FOLLOWING ALL STEEL JOIST AND JOIST GIRDER ERECTION STABILITY AND HANDLING REQUIREMENTS AS STATED IN THE MANUFACTURER'S CATALOG AND THE PREVIOUSLY REFERENCED STEEL JOIST INSTITUTE SPECIFICATIONS.

16. FIRE SPRINKLER INSTALLER SHALL USE CONNECTORS WITH I.C.C. APPROVAL AND FOLLOW N.F.P.A. 13 DESIGN SPECIFICATIONS.

17. THE STEEL JOIST AND JOIST GIRDER MANUFACTURER IS REQUIRED TO PERFORM AN INSTALLATION REVIEW. UPON COMPLETION OF THAT REVIEW, THE MANUFACTURER SHALL SEND A LETTER TO THE ENGINEER OF RECORD STATING THAT THE REVIEW WAS PERFORMED, THE TRUSSES ARE IN CONFORMANCE WITH THE APPROVED PLANS, THE PRODUCTS WERE INSTALLED PER THE MANUFACTURER'S RECOMMENDATIONS AND ALL WARRANTIES ARE IN EFFECT. THE INSTALLATION REVIEW IS TO BE PERFORMED NO LATER THAN 30 DAYS AFTER THE PRODUCTS HAVE BEEN INSTALLED. FAILURE TO PERFORM WILL RESULT IN THE FORFEITURE OF MANUFACTURER'S FUTURE PRODUCT ACCEPTANCE.

18. SEE PLANS FOR REQUIRED ROOF SLOPE.

19. SEE PLANS FOR DRAG LOADS AT JOISTS ON COLLECTOR LINES. SEE SPECIFIC DETAILS FOR SHEAR TRANSFERS.

STEEL JOIST AND JOIST GIRDER SCHEDULE

MARK #	DESIG-NATION	PROFILE	DEPTH "D_1" (in)	DEPTH "D_2" (in)	DEPTH "D_3" (in)	HEEL HT. "H" (in)	BEARING "B_{MIN}" (in)
SJ-01	30K	PARALLEL	30	-	-	2.5	4
SJ-02	30K	PARALLEL	30	-	-	2.5	4
SJ-03	80DLH	PARALLEL	80	-	-	5	6
SJ-04	80DLH	PARALLEL	80	-	-	5	6

ENLARGED END DETAIL

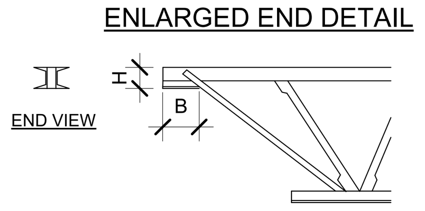

PROFILES

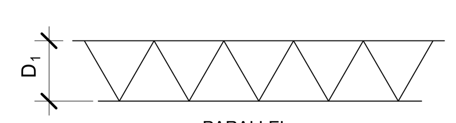

TRUSS LOADING DESIGN REQUIREMENTS

NOTES:

1. UNIFORM LOAD SYMBOLS:

   WD = TOP CHORD DEAD LOAD
   WL = TOP CHORD LIVE LOAD
   WS = TOP CHORD SNOW LOAD
   WSD = TOP CHORD SNOW DRIFT LOAD
   WBD = BOTTOM CHORD DEAD LOAD
   WBL = BOTTOM CHORD LIVE LOAD - NEED NOT BE CONCURRENT WITH TOP CHORD LIVE LOAD
   WWU1 = TOP CHORD WIND UPLIFT WHERE OCCURS. WWUL SHALL OCCUR FULL LENGTH OF TRUSS U.N.O.
   WWU2 = TOP CHORD WIND UPLIFT AT DISCONTINUITIES. WWUZ, WHERE OCCURS, SHALL REPLACE WWUL

2. POINT LOAD SYMBOLS:

   PM = TOP CHORD POINT DEAD LOAD AT MECHANICAL UNITS. LOCATION SHOWN IS APPROXIMATE. FINAL LOCATION TO BE PROVIDED BY MECHANICAL ENGINEER AND GENERAL CONTRACTOR

   PD = TOP CHORD POINT DEAD LOAD

   PL = TOP CHORD POINT LIVE LOAD

   PBSP= BOTTOM CHORD POINT LOAD AT SPRINKLERS. VERTICAL LOAD AT FIRE SPRINKLERS SUPPORTS SHALL INCLUDE WEIGHT OF WATER FILLED PIPE PLUS 250LBS. PDSP MAY OCCUR AT ANY LOCATION ALONG BOTTOM CHORD AND MAY NOT OCCUR AT A PANEL POINT. GENERAL CONTRACTOR SHALL COORDINATE THE WEIGHT AND LOCATION OF ALL SPRINKLER LOADS AND SUPPLY THEIR INFORMATION TO STEEL JOIST MANUFACTURER PRIOR TO COMMENCING STEEL JOIST DESIGN. SPRINKLER LIVE LOAD NEE NOT BE CONCURRENT WIT ANY OTHER LIVE LOADS.

   PBD = BOTTOM CHORD DEAD LOAD TO OCCUR AT ANY PANEL POINT. STEEL JOISTS TO BE DESIGNED FOR A SINGLE OCCURRENCE OF THIS LOAD U.N.O.

   PBL = BOTTOM CHORD LIVE LOAD TO OCCUR AT ANY PANEL POINT. STEEL JOISTS TO BE DESIGNED FOR A SINGLE OCCURRENCE OF THIS LOAD U.N.O. THIS LOAD NEED NOT BE CONCURRENT WITH TOP CHORD LIVE LOADS.

   PHT = HORIZONTAL TOP CHORD AXIAL FORCE (CONSIDER BOTH TENSION AND COMPRESSION) FROM WIND OR SEISMIC FORCE. WHERE NOTED AS SEISMIC DRAG LOAD, CONSIDER ADDITIONAL LOAD COMBINATIONS OF A.S.C.E. 7 12.4.3.2.

STEEL JOIST AND JOIST GIRDER LOADING DIAGRAM NOTES:

1. STEEL JOIST DESIGN SHALL BE BASED ON ALLOWABLE STRESS DESIGN (ASD) AND SHALL UTILIZE THE APPROPRIATE LOAD COMBINATIONS PROVIDED IN A.S.C.E. 7 CHAPTER 2. INCREASES IN ALLOWABLE STRESS BASED ON DURATION OF LOADING SHALL NOT BE USED. WHERE STEEL JOISTS ARE REQUIRED TO RESIST SEISMIC FORCES, THE ADDITIONAL LOAD COMBINATIONS OF A.S.C.E. 12.4.2.3 AND 12.4.3.2 SHALL ALSO APPLY.

2. ALL LOADS ARE UNFACTORED U.N.O. ALL SEISMIC LOADS ARE UNFACTORED (NOT E/1.4). ALL SEISMIC DRAG LOADS ARE OVERSTRENGTH.

3. THE JOISTS SPECIFIED ON PLAN ARE BASED ON OPTION #1 APPROACH AS NOTED IN THE SJI CODE OF STANDARD PRACTICE, SECTION PER SECTION 6 "JOIST MANUFACTURER SHALL DESIGN JOISTS FOR ADDITIONAL LOADS AS SHOWN". SEE PLAN AND LOADING DIAGRAMS FOR ADDITIONAL LOADING CONDITIONS. THE ADDITIONAL LOADS MAY REQUIRE THE USE OF JOISTS THAT HAVE GREATER CAPACITY THAN THE TYPICAL JOIST SHOWN ON THE PLANS AND/OR ADDITIONAL JOISTS MAY BE REQUIRED TO ACCOMMODATE THE ADDITIONAL LOADS.

4. UNIFORM LOADS:
   ALL TOP CHORD UNIFORM LOADS SHALL BE ASSUMED TO OCCUR ALONG THE FULL LENGTH OF THE TRUSS U.N.O. SNOW DRIFT LOADS SHALL BE CONSIDERED WHERE SHOWN. BOTTOM CHORD UNIFORM LOADS SHALL BE CONSIDERED TO OCCUR ALONG THE FULL LENGTH OF THE TRUSS. BOTTOM CHORDS SHALL EXTEND TO SUPPORT WHERE NECESSARY TO ATTACH SUSPENDED ELEMENTS.

5. POINT LOADS:
   POINT LOAD LOCATIONS SHOWN ARE APPROXIMATE. COORDINATE FINAL LOCATIONS WITH ARCHITECTURAL, MECHANICAL, PLUMPING AND ELECTRICAL. IN LIEU OF DETERMINING PRECISE LOCATIONS OF POINT LOADS AT STEEL JOISTS, THE MANUFACTURER MAY CONSIDER POINT LOADS AS ADDITIONAL LOAD WITH THE JOIST DESIGN BASED ON WORST CASE POSSIBLE LOCATIONS OF POINT LOADS. JOIST MANUFACTURER SHALL DESIGN TOP AND BOTTOM CHORDS TO SUPPORT POINT LOADS NOT OCCURRING AT PANEL POINTS OR SHALL PROVIDE SUPPLEMENTAL STRUTS.

6. WHERE NON-STRUCTURAL COMPONENT BRACING ATTACHES TO STEEL JOISTS, MANUFACTURER SHALL INCLUDE BRACING LOADS IN THE LOAD COMBINATIONS. WHERE THE DESIGN OF NON-STRUCTURAL COMPONENT SUPPORT AND BRACING HAS BEEN DEFERRED, GENERAL CONTRACTOR SHALL PROVIDE HANGER AND BRACING LOADS, LOCATIONS AND ATTACHMENT DETAILS TO STEEL JOIST MANUFACTURER FOR INCLUSION IN STEEL JOIST DESIGN.

7. FOR DESIGN REQUIREMENTS SEE STEEL JOIST AND JOIST GIRDER DESIGN CRITERIA.

8. JOIST DESIGNATIONS SHOWN ON FRAMING PLANS CORRESPOND TO THE FOLLOWING.
   STEEL JOISTS EXAMPLE:
   26K(RJ-1) INDICATES 26'DEEP 'K' SERIES ROOF JOIST WITH LOADING TYPE RJ-I AS SHOWN IN LOADING SCHEDULE. FINAL STEEL JOIST SECTION NUMBER (E.G. 26K1O) TO BE DE DETERMINED BY STEEL JOIST MANUFACTURER.
   32LH(FJ-1) INDICATES 32' 'LH' SERIES FLOOR JOIST WITH LOADING TYPE FJ-I AS SHOWN IN LOADING SCHEDULE. FINAL STEEL JOIST SECTION NUMBER (E.G. 32LH11) TO BE DETERMINED BY STEEL JOIST MANUFACTURER.

STEEL JOIST LOADING TYPE	UNIFORM LOADS (POUNDS PER LINEAL FOOT = PLF)							
	WD	WL	WS	WSD	WBD	WBL	PM	PM
SJ-1	95 PLF	152 PLF	0 PLF	0 PLF	32 PLF	0 PLF	AS REQD.	AS REQD.
SJ-2	95 PLF	140 PLF	0 PLF	0 PLF	32 PLF	0 PLF	AS REQD.	AS REQD.
SJ-3	434 PLF	375 PLF	0 PLF	0 PLF	125 PLF	0 PLF	AS REQD.	AS REQD.
SJ-4	496 PLF	430 PLF	0 PLF	0 PLF	143 PLF	0 PLF	AS REQD.	AS REQD.

STEEL JOIST LOADING TYPE	POINT LOADS (POUNDS = LBS; FEET = FT.)											
	PM	XM	PD	XD	PL	XL	PBSP	PBD	XBD	PBL	XBL	PHT
SJ-1	N/A	N/A	N/A	N/A	N/A	N/A	SEE PLAN	250 LBS.	ANY	250 LBS.	ANY	2.8k
SJ-2	N/A	N/A	N/A	N/A	N/A	N/A	SEE PLAN	250 LBS.	ANY	250 LBS.	ANY	2.8k
SJ-3	N/A	N/A	N/A	N/A	N/A	N/A	SEE PLAN	250 LBS.	ANY	250 LBS.	ANY	6.25k
SJ-4	N/A	N/A	N/A	N/A	N/A	N/A	SEE PLAN	250 LBS.	ANY	250 LBS.	ANY	6.25k

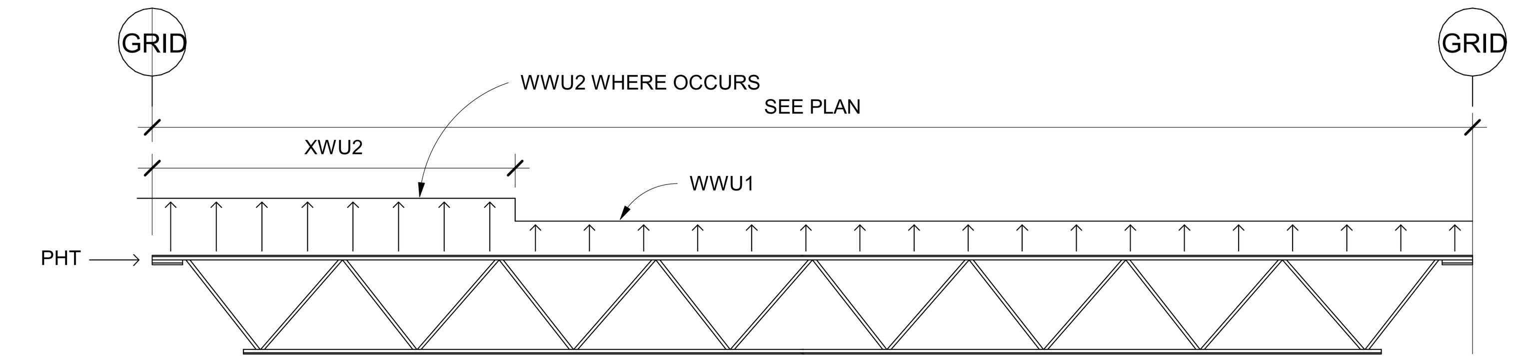

WIND UPLIFT LOADS

NET UPLIFT TO BE DETERMINED FROM A.S.C.E. 7 2.4.1.
AS FOLLOWS: NET UPLIFT = 0.6D - W

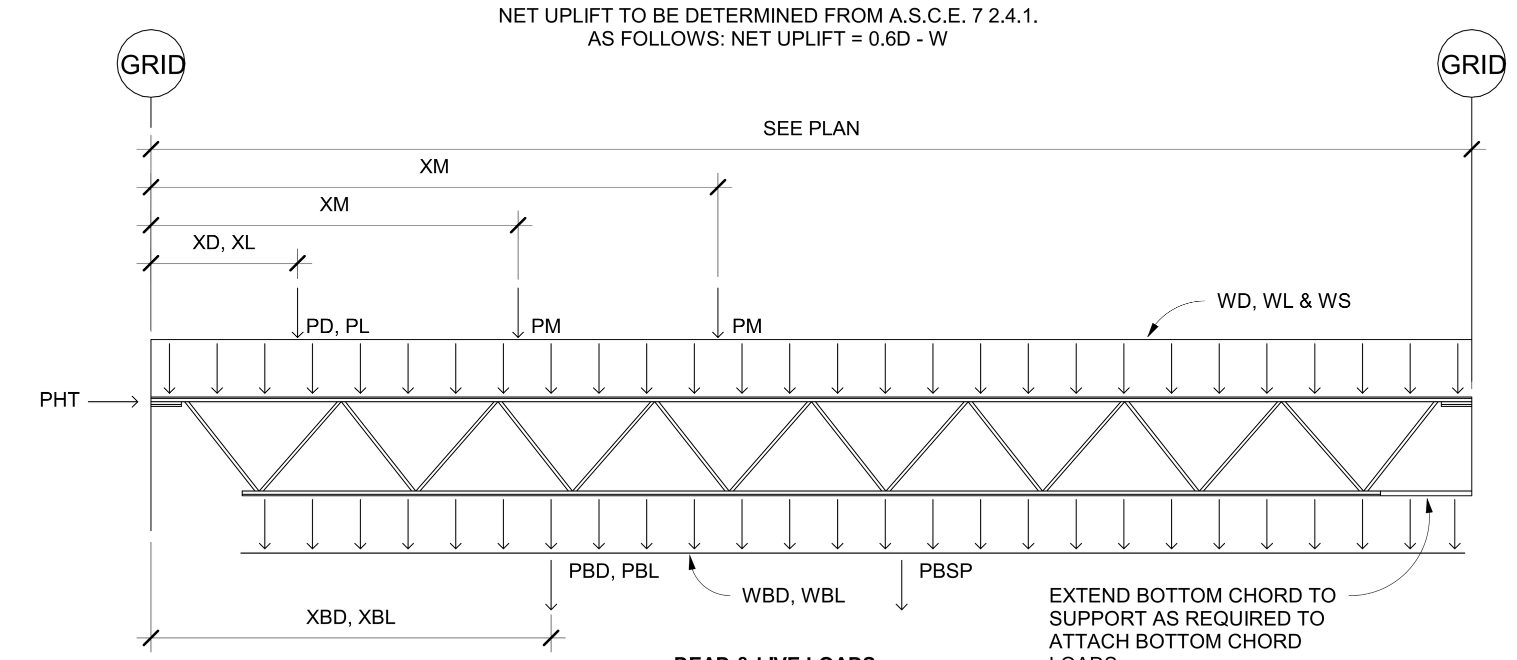

DEAD & LIVE LOADS

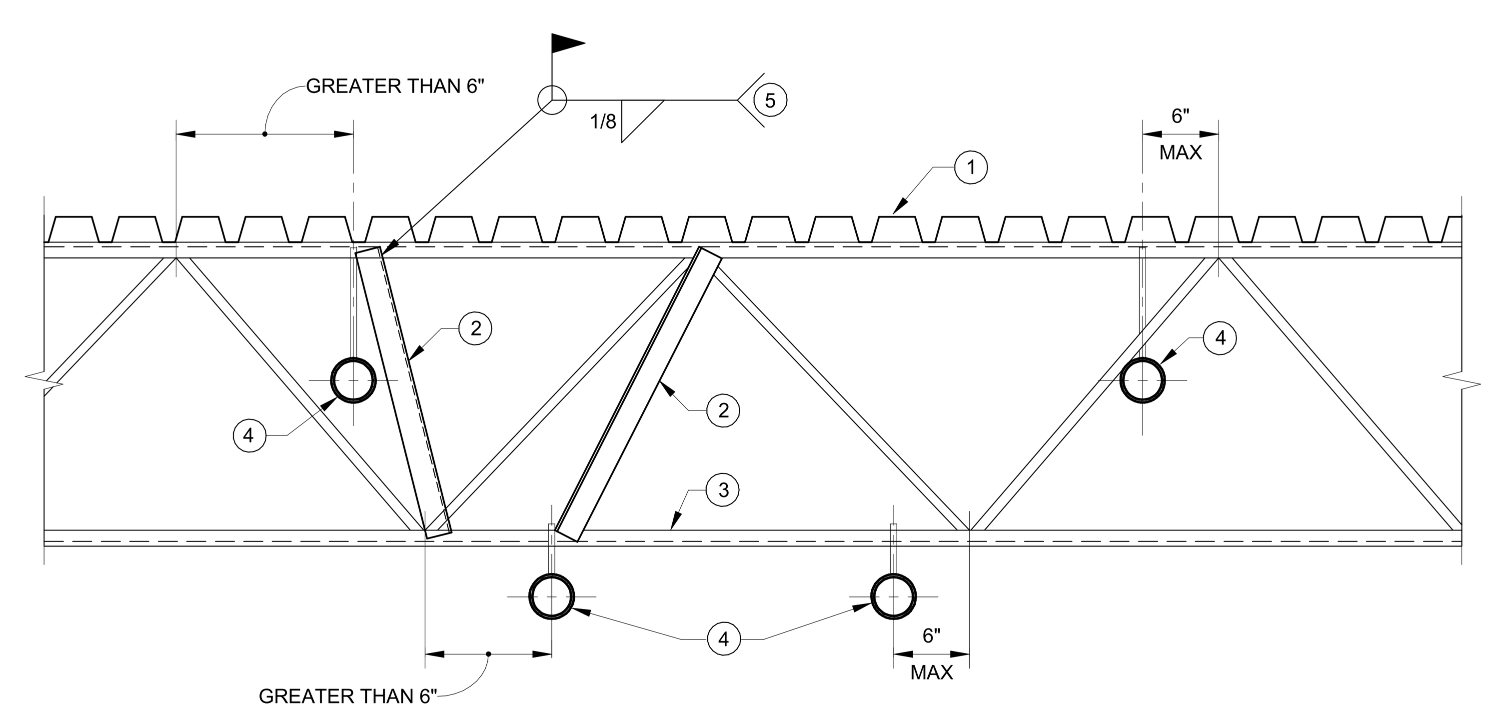

NOTE: ALL CONCENTRATED LOADS TO THE STEEL JOIST, SHALL BE CONNECTED WITHIN 6" OF THE JOIST TOP OR BOTTOM CHORD PANEL POINT. ADD A DIAGONAL ANGLE WHERE THE CONCENTRATED LOAD IS NOT WITHIN 6" OF A TOP OR BOTTOM CHORD PANEL POINT.

KEY NOTES:

1. STEEL ROOF OR FLOOR DECK.
2. ADDITIONAL L2x2x3/16.
3. STEEL JOIST.
4. PIPE OR OTHER CONCENTRATED LOAD. (NOT TO EXCEED 100 LBS UNLESS NOTED OTHERWISE ON PLANS).
5. WELD EACH END, TYPICAL.

CONCENTRATED LOADS AT STEEL JOISTS 7 / S-103

1" = 1'-0"

rrm design group
rrmdesign.com | (805) 543-1794
3765 SOUTH HIGUERA STREET, SUITE 102
SAN LUIS OBISPO, CA 93401

THE INCLUDED DRAWINGS, SPECIFICATIONS, IDEAS, DESIGNS AND ARRANGEMENTS REPRESENTED THEREBY ARE AND SHALL REMAIN THE PROPERTY OF RRM DESIGN GROUP AND NO PART THEREOF SHALL BE COPIED, DISCLOSED TO OTHERS OR USED IN CONNECTION WITH ANY WORK OR PROJECT OTHER THAN THE SPECIFIED PROJECT FOR WHICH THEY HAVE BEEN PREPARED AND DEVELOPED WITHOUT THE WRITTEN CONSENT OF RRM DESIGN GROUP. VISUAL CONTACT WITH THESE DRAWINGS OR SPECIFICATIONS SHALL CONSTITUTE CONCLUSIVE EVIDENCE OF ACCEPTANCE OF THESE RESTRICTIONS. SUBMITTAL OF THESE DOCUMENTS FOR PUBLIC AGENCY REVIEW SHALL NOT BE CONSIDERED A WAIVER OF RRM DESIGN GROUP'S RIGHTS.
RRM DESIGN GROUP COPYRIGHT 2023
RRM IS A CALIFORNIA CORPORATION

REGISTERED PROFESSIONAL ENGINEER
DUSTIN G. LEE
No. S6623
EXP. 3/31/25
STRUCTURAL
STATE OF CALIFORNIA

CONSULTANT
CORNERSTONE
structural engineering group
986 W. Alluvial, Suite 201
Fresno, California 93711
559.320.3200
fax 559.320.3201

AGENCY

PORTERVILLE COMMUNITY CENTER
N 4TH ST, PORTERVILLE, CA 93257

TYPICAL DETAILS No. 3

NO.	REVISION	DATE
△		
△		
△		
△		
△		
△		

PROJECT MANAGER
DRAWN BY
CHECKED BY
DATE
09.10.24
PROJECT NUMBER
2883-01-RC22
SHEET
S-103

CONSTRUCTION DOCUMENTS

9/10/2024 2:25:00 PM
\\cseg-fr-fs01\frhome$\markw\Porterville_2022_Structural_danderson@cseg.com.rvt

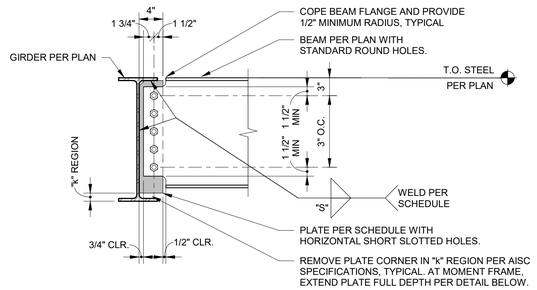

CONNECTION SCHEDULE				
BEAM SIZE	PLATE (3)		WELD SIZE "S"	BOLTS (2)
	MIN. DEPTH	THICKNESS		NO. & SIZE (1)
W10x, C10x	6"	3/8"	5/16	(2) 3/4"Ø
W12x, C12x	9"	3/8"	5/16	(3) 3/4"Ø

NOTES:
1. FOR SINGLE COLUMN OF BOLTS, UNLESS NOTED OTHERWISE.
2. ALL BOLTS SHALL BE A325N AND ORIENTED IN THE SAME DIRECTION, UNLESS NOTED OTHERWISE.
3. STEEL PLATE SHALL BE ASTM A36, UNLESS NOTED OTHERWISE.
4. COPE FLANGES OR LOCATE TAB PLATE TO BE 1/16" MIN. CLEAR OF "k" PER AISC SPECIFICATIONS.

BEAM CONNECTION

NO SCALE

1 / S-104

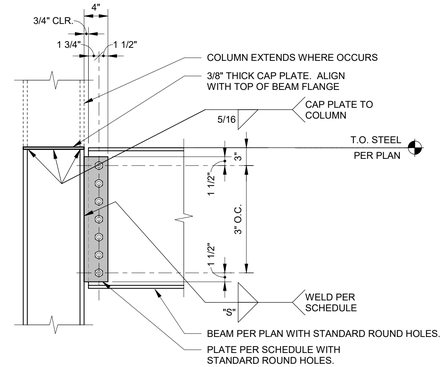

WIDE FLANGE BEAM TO WIDE FLANGE COLUMN FLANGE

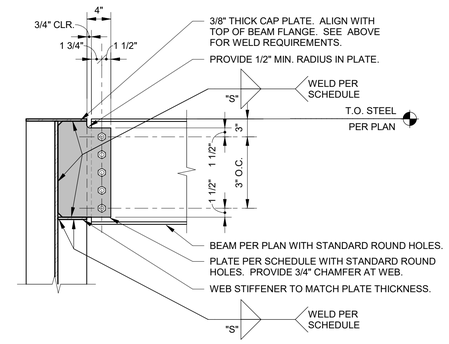

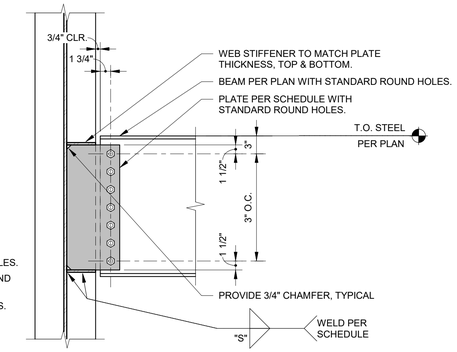

WIDE FLANGE BEAM TO WIDE FLANGE COLUMN WEB

BEAM TO WIDE FLANGE COLUMN

NO SCALE

2 / S-104

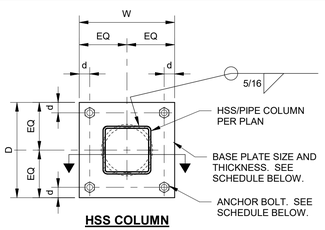

HSS COLUMN

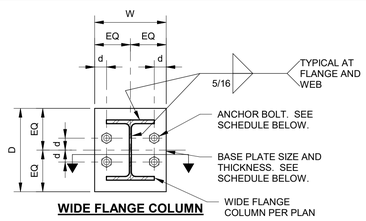

WIDE FLANGE COLUMN

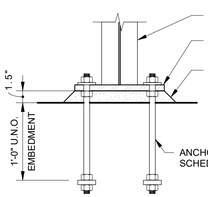

SECTION VIEW

STEEL COLUMN PLATE SCHEDULE (2)						
COLUMN	BASE PLATE					ANCHOR BOLT (1)
	D	W	tp	d	GRADE	
HSS5x	11"	11"	3/4"	1 1/2"	A36 (36KSI)	(4) 3/4"Ø
W12	14"	14"	1"	2"	A36 (36KSI)	(4) 1"Ø

NOTES:
1. FOR ADDITIONAL ANCHOR BOLT REQUIRMENTS, SEE DETAIL 7/S-102
2. ALL BASE PLATE SHALL CONFORM TO THESE REQUIREMENTS UNLESS OTHERWISE NOTED.

BASE PLATE DETAIL

1" = 1'-0"

3 / S-104

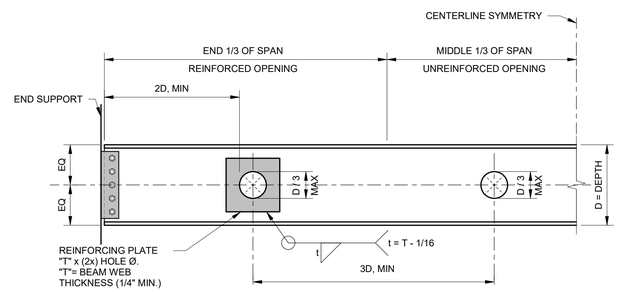

NOTES:
1. HOLES 2" Ø AND LESS SHALL NOT BE TORCH CUT.
2. TORCH CUT HOLES SHALL BE WITHIN 1/4" AMPLITUDE FROM CIRCULAR HOLE DIAMETER. CONTRACTOR SHALL MARK BEAM WITH HOLE OUTLINE PRIOR TO CUTTING.
3. GRIND TORCH CUT HOLES TO REMOVE BURRS.

STEEL BEAM PENETRATION

3/4" = 1'-0"

4 / S-104

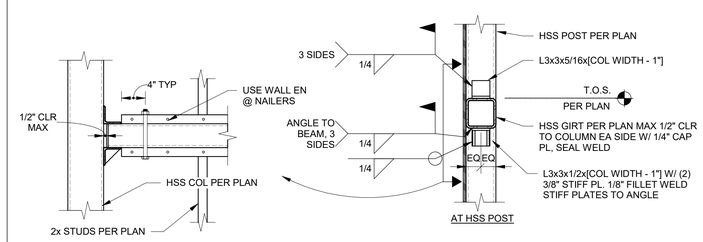

TYPICAL HSS BEAM TO HSS COLUMN CONNECTION

1" = 1'-0"

5 / S-104

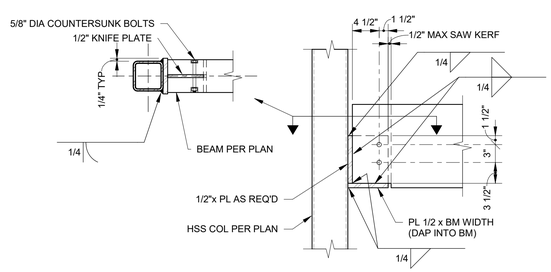

TYPICAL WOOD BEAM TO HSS COLUMN

1" = 1'-0"

6 / S-104

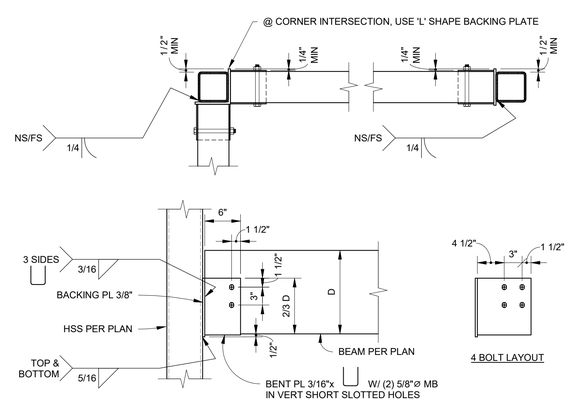

TYPICAL LVL TO HSS CONNECTION

1" = 1'-0"

7 / S-104

rrm design group
rrmdesign.com | (805) 543-1794
3765 SOUTH HIGUERA STREET, SUITE 102
SAN LUIS OBISPO, CA 93401

THE INCLUDED DRAWINGS, SPECIFICATIONS, IDEAS, DESIGNS AND ARRANGEMENTS REPRESENTED THEREBY ARE AND SHALL REMAIN THE PROPERTY OF RRM DESIGN GROUP AND NO PART THEREOF SHALL BE COPIED, DISCLOSED TO OTHERS OR SUBSTANTIALLY USED FOR ANY PURPOSE WHATSOEVER OTHER THAN THE PROJECT FOR WHICH THEY HAVE BEEN PREPARED AND DEVELOPED WITHOUT THE WRITTEN CONSENT OF RRM DESIGN GROUP. VISUAL CONTACT WITH THESE DRAWINGS OR SPECIFICATIONS SHALL CONSTITUTE CONCLUSIVE EVIDENCE OF ACCEPTANCE OF THESE RESTRICTIONS. SUBMITTAL OF PRELIMINARY DRAWINGS FOR REVIEW SHALL NOT BE CONSIDERED A WAIVER OF RRM DESIGN GROUP'S RIGHTS.
RRM DESIGN GROUP COPYRIGHT 2023
RRM IS A CALIFORNIA CORPORATION

REGISTERED PROFESSIONAL ENGINEER
AUSTIN G. LEE
No. S6623
EXP. 3/31/25
STRUCTURAL
STATE OF CALIFORNIA

CONSULTANT

CORNERSTONE structural engineering group
986 W. Alluvial, Suite 201
Fresno, California 93711
559.320.3200
fax 559.320.3201

AGENCY

PORTERVILLE COMMUNITY CENTER
N 4TH ST, PORTERVILLE, CA 93257

TYPICAL DETAIL No. 4

NO.	REVISION	DATE

PROJECT MANAGER
DRAWN BY | CHECKED BY
DATE 09.10.24
PROJECT NUMBER 2883-01-RC22
SHEET S-104

CONSTRUCTION DOCUMENTS

9/10/2024 2:25:01 PM
\\cseg-fr-fs01\fhome$\markw\Porterville_2022_Structural_danderson@cseg.com.rvt

NOTES:
1. OPENINGS LESS THAN 6"x6" REQUIRE NO FRAMING.
   SEE DETAIL 2/S-105
2. FOR OPENINGS GREATER THAN 18" OR 75# LOAD DEMAND.
   SEE DETAIL -/---
3. TYPICAL AT ISOLATED OPENINGS IN NON-COMPOSITE STEEL DECK LESS THAN 18" SQUARE.
4. BLOCK OUT OPENING BEFORE PLACING CONCRETE, WHERE OCCURS.
5. REMOVE BLOCKOUT AND CUT DECK AFTER CONCRETE HAS CURED, WHERE OCCURS.
6. CONTRACTOR SHALL COORDINATE OPENING SIZE AND LOCATION WITH MECHANICAL AND ELECTRICAL CONTRACTORS AND ARCHITECTURAL DRAWINGS.

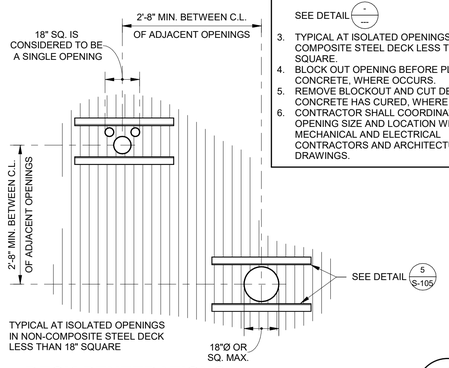

DECK PENETRATIONS
12" = 1'-0"
1 / S-105

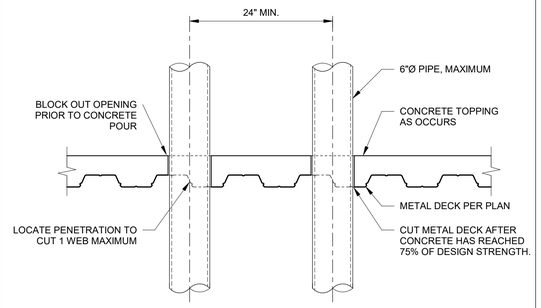

NOTES:
1. SPACE PENETRATIONS PARALLEL TO DECK 3 DIAMETERS MINIMUM.
2. IF ALL REQUIREMENTS NOTED IN THIS DETAIL ARE NOT MET, TYPICAL METAL DECK PENETRATION DETAILS ARE REQUIRED. SEE DETAIL 1/S-105

PIPE PENETRATIONS
1" = 1'-0"
2 / S-105

STEEL DECK SCHEDULE

TYPE	PRODUCT	ICC REPORT	HEIGHT (INCH)	GAGE	CONCRETE FILL (INCH)	REINFORCING	PROFILE	-Ix MIN (IN^4)	+Ix MIN (IN^4)	-Sx MIN (IN^3)	+Sx MIN (IN^3)	REMARKS
1	VERCO HSB-36	ESR 1735P	1.5	18	N/A	N/A	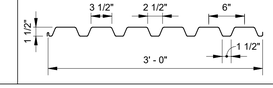	N/A	0.302	0.335	0.322	ROOF DECK

NOTE:
1. METAL DECK SHALL BE CONTINUOUS OVER 3 SPANS WHERE POSSIBLE. CONTRACTOR SHALL DETERMINE SHORING REQUIREMENTS FOR DECK INSTALLATION.
2. METAL DECK SHALL BEAR A MINIMUM OF 2 INCHES AT ENDS AND 4 INCHES AT INTERMEDIATE SUPPORTING MEMBERS.
3. DECK FLUTES SHALL RUN PERPENDICULAR TO SUPPORTING MEMBERS UNLESS SHOWN OTHERWISE.
4. CONCRETE FILL THICKNESS IS MEASURED FROM TOP OF DECK TO TOP OF CONCRETE. CONTRACTOR TO COMPENSATE FOR FRAMING AND DECK DEFLECTION TO MAINTAIN LEVEL.
5. NO CONDUITS SHALL BE RUN WITHIN THE CONCRETE FILL UNLESS SPECIFICALLY DETAILED ON THE STRUCTURAL DRAWINGS.
6. MECHICAL, ELECTRICAL, OR PLUMBING UTILITIES HUNG FROM STEEL DECK SHALL NOT EXCEED 100# PER HANGER AND SHALL BE SPACED SO THAT THE TOTAL UTILITY WEIGHT DOES NOT EXCEED 5 PSF.
7. PROVIDE BENT PLATE CLOSURES AT ALL DECK EDGES @ CONC FILL LOCATIONS, U.N.O.
8. THE CONTRACTOR SHALL PROTECT STEEL DECK DURING CONSTRUCTION. ANY DECKING WHICH IS FOUND TO BE DAMAGED SHALL BE REMOVED AND REPLACED AT THE CONTRACTOR'S EXPENSE.
9. AT WWF SPLICES OVERLAP ADJACENT MATS A MINIMUM OF 14". THERE SHALL BE A MINIMUM OF 2" BETWEEN CROSS WIRES OF THE LAPPED MATS.

METAL DECK SCHEDULE
NO SCALE
3 / S-105

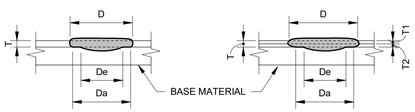

NOTE:
Da = (D - T)
De = (0.7D - 1.5T)

SINGLE THICKNESS OF SHEET

NOTE:
Da = (D - 2T)
De = (0.7D - 1.5T)

DOUBLE THICKNESS OF SHEET

GAGE		VISIBLE WELD SIZE
(0.0283")	22	3/4" DIA. (0.774)
(0.0346")	20	3/4" DIA. (0.788)
(0.0451")	18	7/8" DIA. (0.811)
(0.0566")	16	7/8" DIA. (0.836)

NOTE:
BASED ON 1/2" EFFECTIVE WELD
ARC SPOT WELDS PER A.W.S. D1.3/ D1.3M
D = (De + 1.5T)/0.7 VISIBLE DIAMETER
Da = RESULTING AVERAGE DIAMETER
De = EFFECTIVE DIAMETER

ARC SPOT WELDS PER AWS D1.3/D1.3M
NO SCALE
4 / S-105

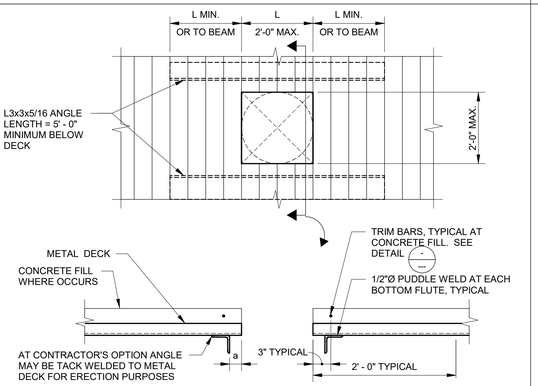

NOTES:
1. THESE OPENINGS ARE NOT SHOWN ON FRAMING PLANS. a = 2" TYPICAL, ADJACENT L3x3 MAY BE OMITTED WHERE DISTANCE "a" TO BEAM FLANGE IS 8" OR LESS.
2. L3x3's MAY BE OMITTED AT SINGLE OPENINGS 6"Ø / 4" SQUARE OR SMALLER THAT CUT MAXIMUM OF ONE DECK WEB. SEE DETAIL 2/S-105

DECK PENETRATION REINFORCING
1" = 1'-0"
5 / S-105

METAL DECK ATTACHMENT (3)

TYPE	TRANSVERSE SUPPORTS (1,2)	PARALLEL SUPPORTS (2)	SIDE SEAMS	REMARKS
1	36/4	PUDDLE WELDS @ 12" O.C.	VERCO SIDELAP CONNECTIONS @ 36" O.C.	

NOTE:
1. WELD DESIGNATION IS AS FOLLOWS:
   A. 36/7/4 DENOTES 36 INCH WIDE DECK, 7 WELDS @ END PANEL SUPPORTS, 4 WELDS @ INTERIOR PANEL SUPPORTS.
   B. 24/4 DENOTS 24 INCH WIDE DECK, 4 WELDS AT ALL PANEL SUPPORTS.
2. PUDDLE WELDS SHALL HAVE 1/2" EFFECTIVE DIAMETER. SEE 4/S-105
3. A HEADED STUD WELDED THRU DECK MAY REPLACE A SINGLE DECK WELD.

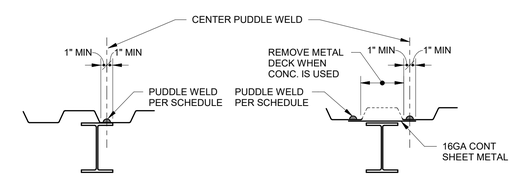

BOTTOM FLUTE AT SUPPORT

BOTTOM FLUTE OUTSIDE SUPPORT

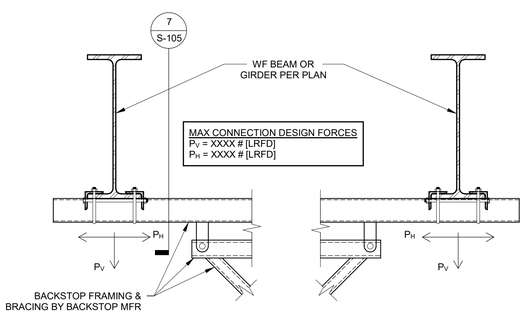

NOTE:
BACKSTOP MFR SHALL FIELD VERIFY ALL DIMENSIONS AND CONDITIONS PRIOR TO FABRICATION AND INSTALLATION. NOTIFY THE ARCHITECT IMMEDIATELY OF ANY CONDITIONS WHICH INTERFERE WITH PROPER INSTALLATION.

SECTION
1" = 1'-0"
6 / S-105

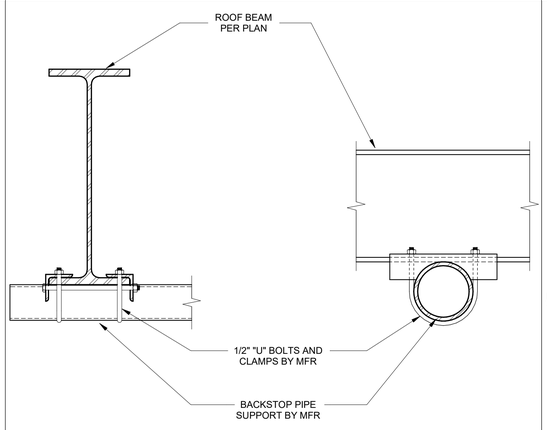

SECTION
1 1/2" = 1'-0"
7 / S-105

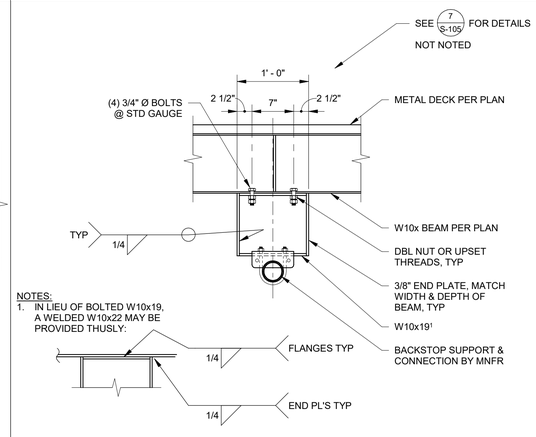

NOTES:
1. IN LIEU OF BOLTED W10x19, A WELDED W10x22 MAY BE PROVIDED THUSLY:

SECTION
1" = 1'-0"
8 / S-105

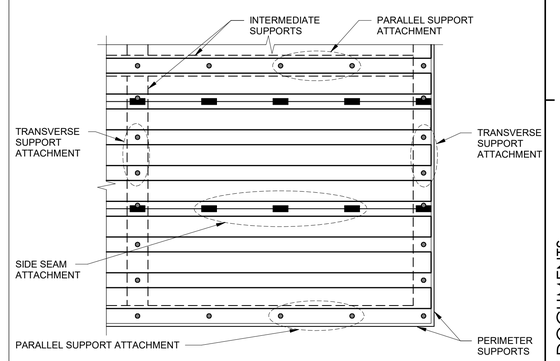

METAL DECK ATTACHMENT SCHEDULE
NO SCALE
9 / S-105

rrm design group
rrmdesign.com | (805) 543-1794
3765 SOUTH HIGUERA STREET, SUITE 102
SAN LUIS OBISPO, CA 93401

THE INCLUDED DRAWINGS, SPECIFICATIONS, IDEAS, DESIGNS AND ARRANGEMENTS REPRESENTED THEREBY ARE AND SHALL REMAIN THE PROPERTY OF RRM DESIGN GROUP AND NO PART THEREOF SHALL BE COPIED, DISCLOSED TO OTHERS OR SUBSTANTIALLY USED FOR ANY PURPOSE WITHOUT THE WRITTEN CONSENT OF AN OWNER PROJECT FOR WHICH THEY HAVE BEEN PREPARED AND DEVELOPED WITHOUT THE WRITTEN CONSENT OF RRM DESIGN GROUP. VISUAL CONTACT WITH THESE DRAWINGS OR SPECIFICATIONS SHALL CONSTITUTE CONCLUSIVE EVIDENCE OF ACCEPTANCE OF THESE RESTRICTIONS. SUBMITTAL OF PRELIMINARY DRAWINGS FOR REVIEW PURPOSES SHALL NOT BE CONSIDERED A WAIVER OF RRM DESIGN GROUP'S RIGHTS.
RRM DESIGN GROUP COPYRIGHT 2023
RRM IS A CALIFORNIA CORPORATION

REGISTERED PROFESSIONAL ENGINEER
JUSTIN G. LEE
No. S6623
EXP. 3/31/25
STRUCTURAL
STATE OF CALIFORNIA

CONSULTANT

CORNERSTONE structural engineering group
986 W. Alluvial, Suite 201
Fresno, California 93711
559.320.3200
fax 559.320.3201

AGENCY

PORTERVILLE COMMUNITY CENTER
N 4TH ST, PORTERVILLE, CA 93257

TYPICAL DETAILS No. 5

NO.	REVISION	DATE
1	Plan Check Revision 1	5/17/24

PROJECT MANAGER
DRAWN BY | CHECKED BY
DATE 09.10.24
PROJECT NUMBER 2883-01-RC22
SHEET S-105

CONSTRUCTION DOCUMENTS

9/10/2024 2:25:01 PM
\\cseg-fr-fs01\fmome$\markw\Porterville_2022_Structural_danderson@cseg.com.rvt

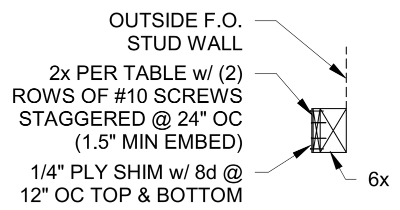

HEADER ASSEMBLY

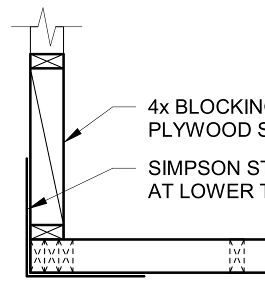

TOP PLATE CORNERS W/ DIFFERENT ELEVATIONS

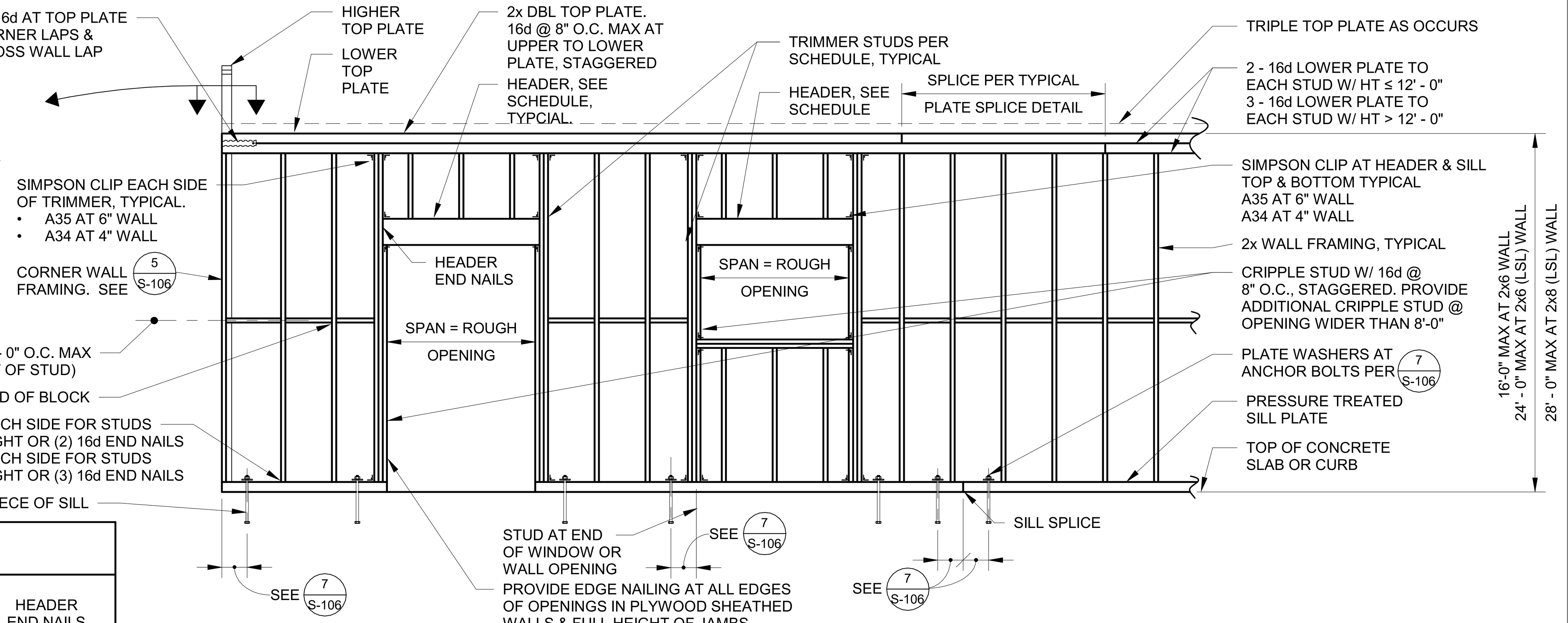

STUD WALL FRAMING SCHEDULE[1]
DEFLECTION LIMIT = L/360 (BEARING); L/240 (NON-BEARING)

OPENING SIZE	NON BEARING WALL HEADER 2x, S.A.D. FOR STUD WIDTH	BEARING WALL HEADER SIZE 2 x 6 WALL	BEARING WALL HEADER SIZE 2 x 8 WALL[2]	SILL SIZE	TRIMMER	HEADER END NAILS
4' - 0" MAX	STUD WIDTH x 6	6 x 6	6 x 6 w/ 2x6	(2) 2x	(2) 2x	4 - 16d EA END
6' - 0" MAX	STUD WIDTH x 8	6 x 8	6x8 w/ 2x8	(2) 2x		4 - 16d EA END
8' - 0" MAX	STUD WIDTH x 10	6 x 10	6x10 w/ 2x10	(2) 2x	(3) 2x	4 - 16d EA END
10' - 6" MAX	STUD WIDTH x 12	6 x 12	6x12 w/ 2x12	(3) 2x	6x[3] 4x W/ 2x[4]	4 - 16d EA END

1. SCHEDULE BASED ON 30 PSF WIND LOAD (BEARING); 5 PSF WIND LOAD (INTERIOR NON-BEARING)
2. SEE HEADER ASSEMBLY DETAIL.
3. @ 2x6 WALLS
4. @ 2x8 & GREATER WALLS

STUDWALL FRAMING — 1 / S-106

NO SCALE

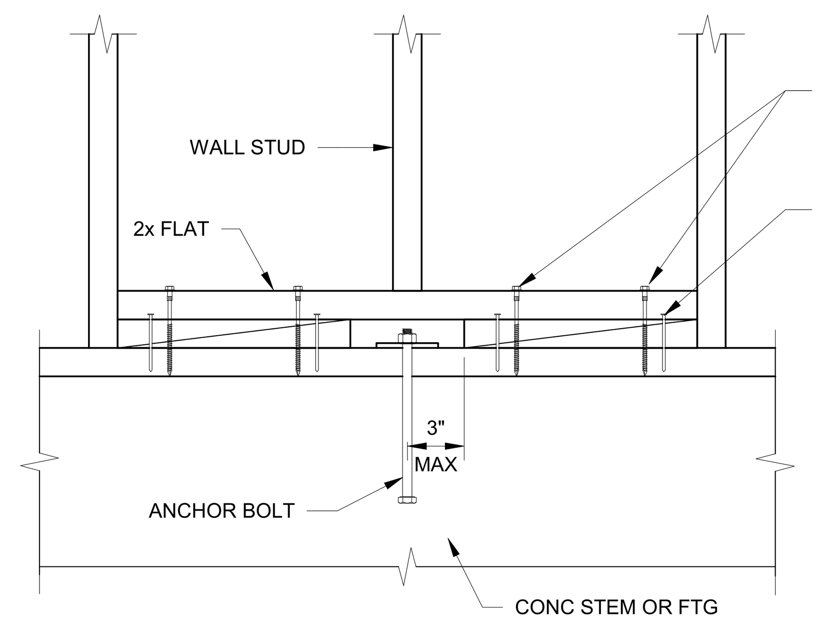

WOOD - ANCHOR BOLTS AT WOOD STUD — 2 / S-106

1 1/2" = 1'-0"

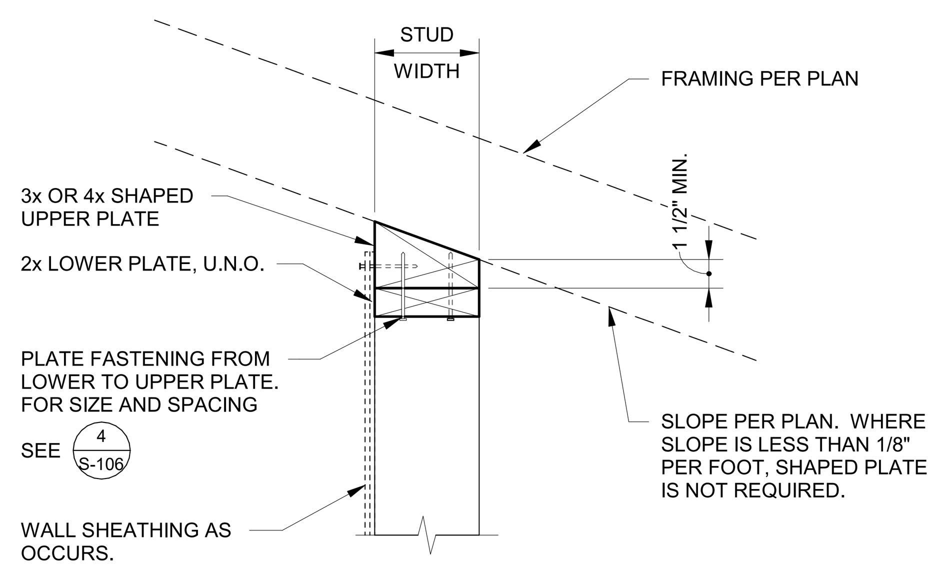

SHAPED TOP PLATE — 3 / S-106

1 1/2" = 1'-0"

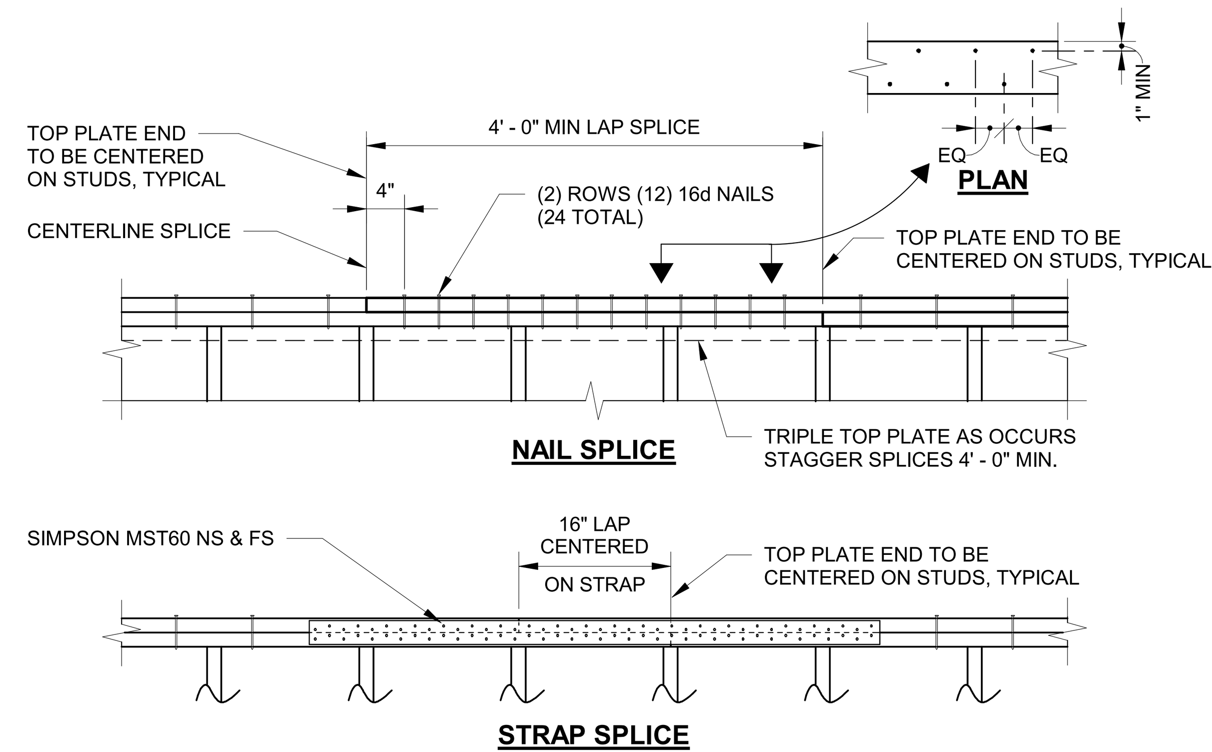

NOTE:
1. USE NAIL SPLICE UNLESS NOTED OTHERWISE ON PLANS.
2. AT PLYWOOD WALLS, STRAP MAY BE INSTALLED OVER PLYWOOD AND TAKE PLACE OF EDGE NAILING.

PLATE SPLICE DETAIL — 4 / S-106

NO SCALE

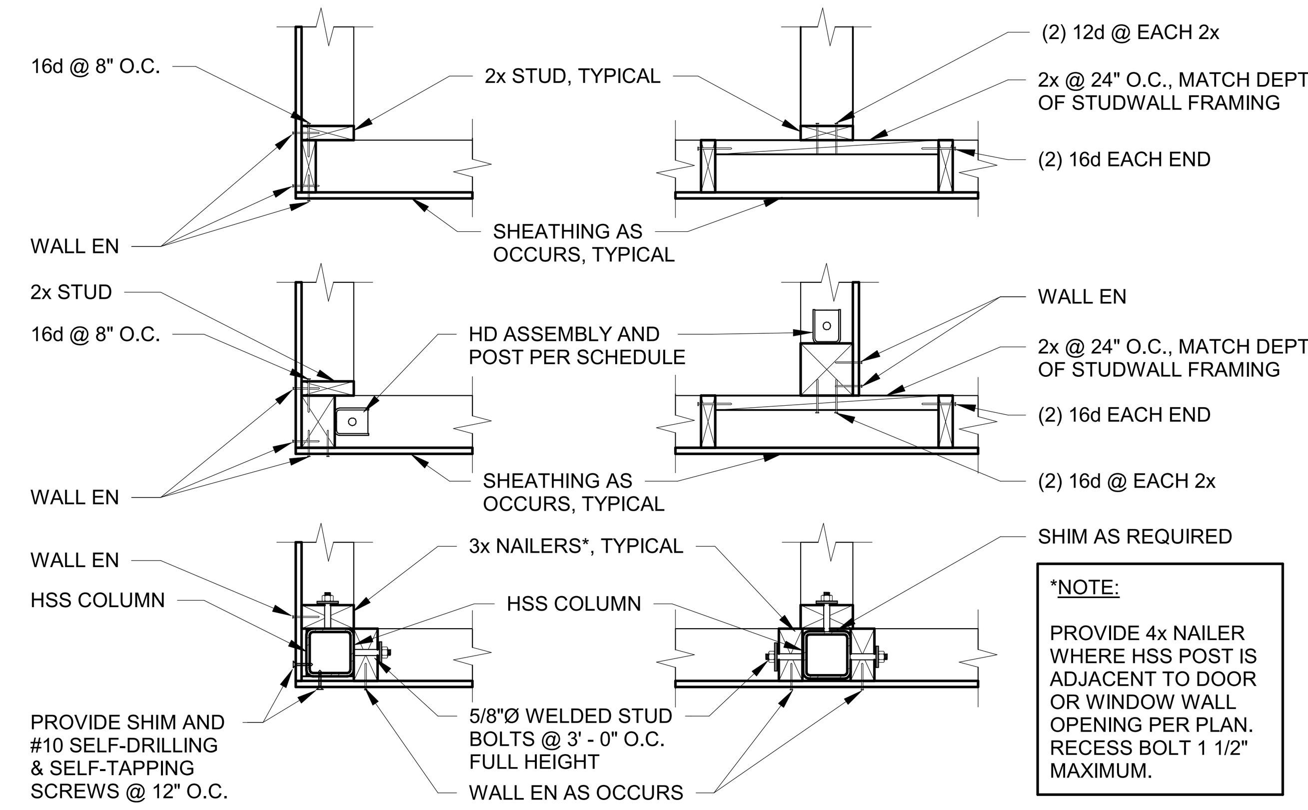

*NOTE:
PROVIDE 4x NAILER WHERE HSS POST IS ADJACENT TO DOOR OR WINDOW WALL OPENING PER PLAN. RECESS BOLT 1 1/2" MAXIMUM.

FRAMING DETAIL — 5 / S-106

NO SCALE

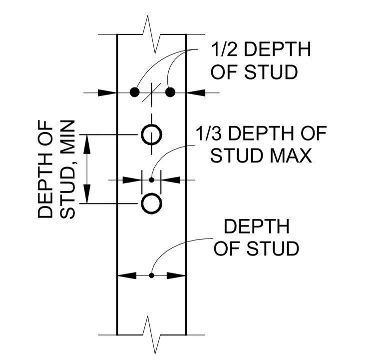

NOTCHING OF STUDS NOT PERMITTED EXCEPT AS DETAILED

HOLES IN STUDS

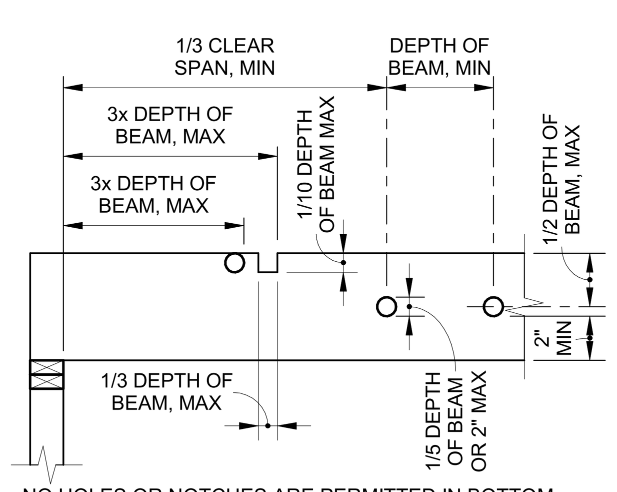

NO HOLES OR NOTCHES ARE PERMITTED IN BOTTOM OF BEAM OR JOISTS. NO HOLES OR NOTCHES ARE PERMITTED WHERE DEPTH OF BEAM IS 5 1/2" OR LESS.

HOLES & NOTCHES IN SAWN LUMBER BEAMS & JOISTS

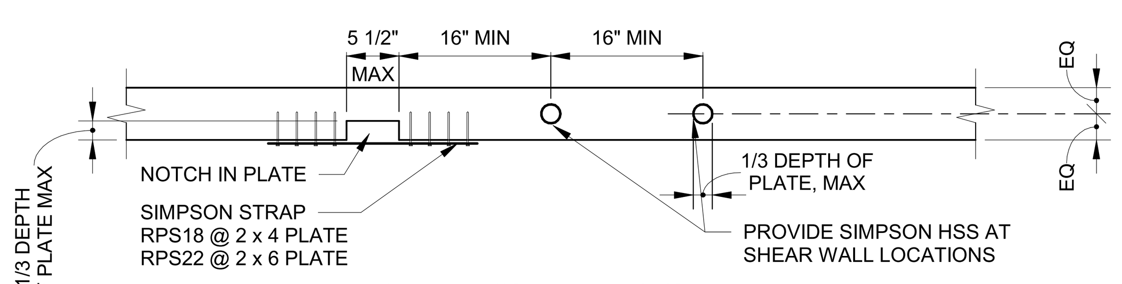

NOTCH / HOLE AT TOP PLATE

NOTCH/HOLE IN FRAMING — 6 / S-106

3/4" = 1'-0"

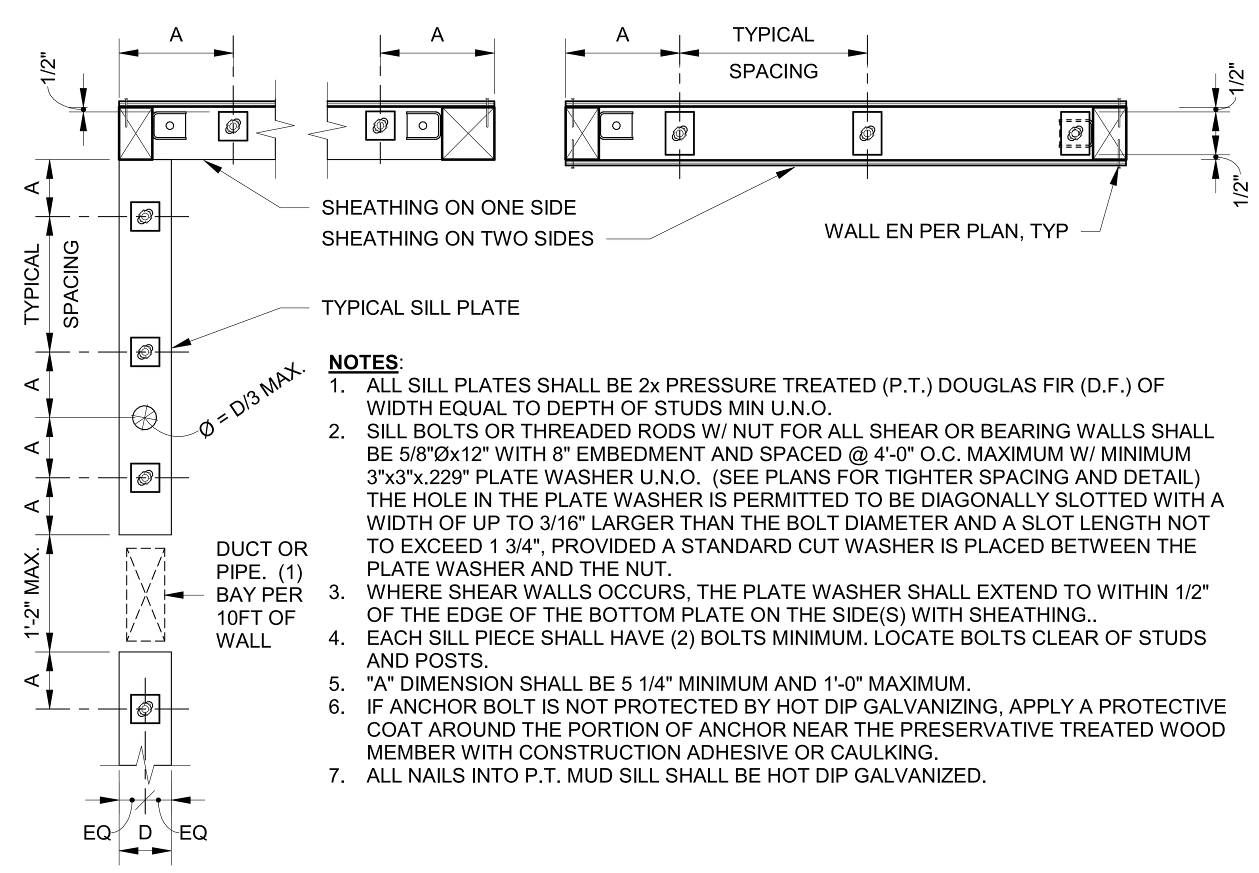

NOTES:
1. ALL SILL PLATES SHALL BE 2x PRESSURE TREATED (P.T.) DOUGLAS FIR (D.F.) OF WIDTH EQUAL TO DEPTH OF STUDS MIN U.N.O.
2. SILL BOLTS OR THREADED RODS W/ NUT FOR ALL SHEAR OR BEARING WALLS SHALL BE 5/8"Øx12" WITH 8" EMBEDMENT AND SPACED @ 4'-0" O.C. MAXIMUM W/ MINIMUM 3"x3"x.229" PLATE WASHER U.N.O. (SEE PLANS FOR TIGHTER SPACING AND DETAIL) THE HOLE IN THE PLATE WASHER IS PERMITTED TO BE DIAGONALLY SLOTTED WITH A WIDTH OF UP TO 3/16" LARGER THAN THE BOLT DIAMETER AND A SLOT LENGTH NOT TO EXCEED 1 3/4", PROVIDED A STANDARD CUT WASHER IS PLACED BETWEEN THE PLATE WASHER AND THE NUT.
3. WHERE SHEAR WALLS OCCURS, THE PLATE WASHER SHALL EXTEND TO WITHIN 1/2" OF THE EDGE OF THE BOTTOM PLATE ON THE SIDE(S) WITH SHEATHING..
4. EACH SILL PIECE SHALL HAVE (2) BOLTS MINIMUM. LOCATE BOLTS CLEAR OF STUDS AND POSTS.
5. "A" DIMENSION SHALL BE 5 1/4" MINIMUM AND 1'-0" MAXIMUM.
6. IF ANCHOR BOLT IS NOT PROTECTED BY HOT DIP GALVANIZING, APPLY A PROTECTIVE COAT AROUND THE PORTION OF ANCHOR NEAR THE PRESERVATIVE TREATED WOOD MEMBER WITH CONSTRUCTION ADHESIVE OR CAULKING.
7. ALL NAILS INTO P.T. MUD SILL SHALL BE HOT DIP GALVANIZED.

SILL PLATE AND ANCHOR BOLT — 7 / S-106

3/4" = 1'-0"

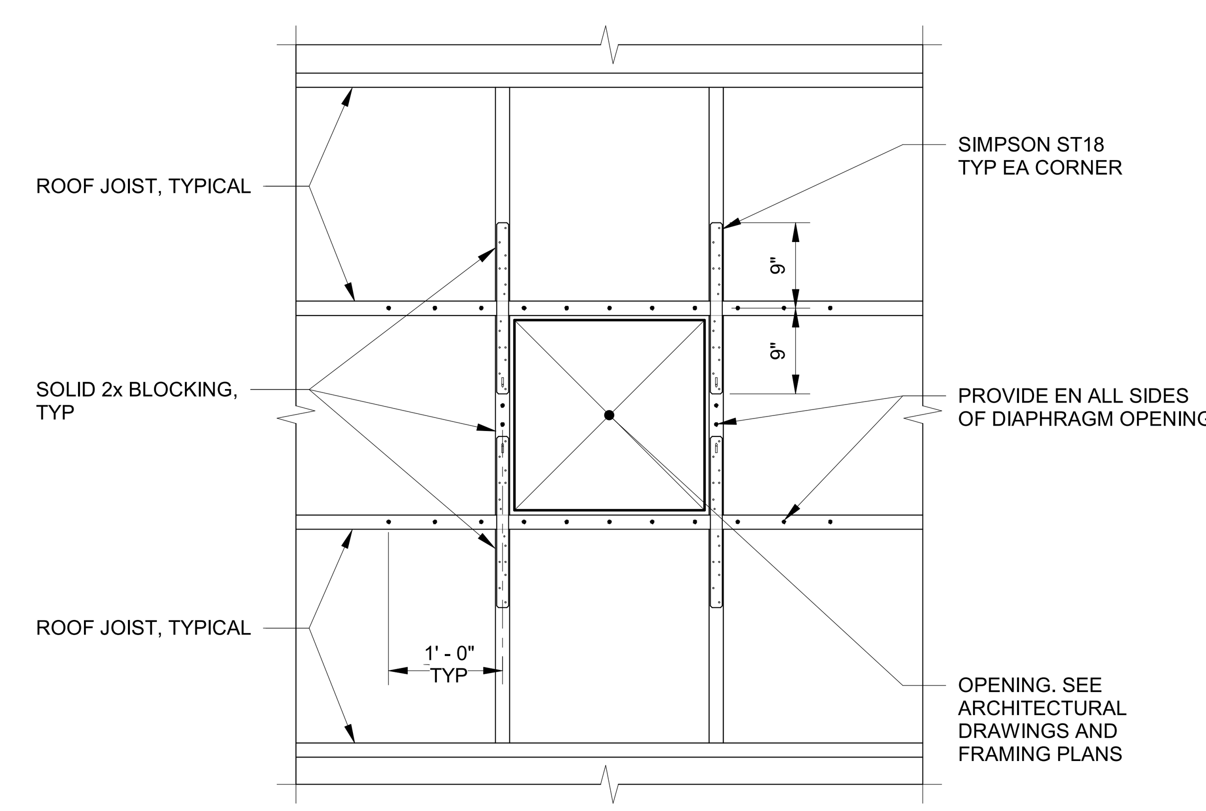

NOTE: MAXIMUM OPENING SIZE NOT TO EXCEED JOIST SPACING.

SMALL ROOF OPENING — 8 / S-106

3/4" = 1'-0"

rrm design group
rrmdesign.com | (805) 543-1794
3765 SOUTH HIGUERA STREET, SUITE 102
SAN LUIS OBISPO, CA 93401

THE INCLUDED DRAWINGS, SPECIFICATIONS, IDEAS, DESIGNS AND ARRANGEMENTS REPRESENTED THEREBY ARE AND SHALL REMAIN THE PROPERTY OF RRM DESIGN GROUP AND NO PART THEREOF SHALL BE COPIED, DISCLOSED TO OTHERS OR USED IN CONNECTION WITH ANY WORK OR PROJECT OTHER THAN THE SPECIFIED PROJECT FOR WHICH THEY HAVE BEEN PREPARED AND DEVELOPED WITHOUT THE WRITTEN CONSENT OF RRM DESIGN GROUP. VISUAL CONTACT WITH THESE DRAWINGS OR SPECIFICATIONS SHALL CONSTITUTE CONCLUSIVE EVIDENCE OF ACCEPTANCE OF THESE RESTRICTIONS. SUBMITTAL OF THESE DOCUMENTS FOR PUBLIC AGENCY REVIEW SHALL NOT BE CONSIDERED A WAIVER OF RRM DESIGN GROUP'S RIGHTS.
RRM DESIGN GROUP COPYRIGHT 2023
RRM IS A CALIFORNIA CORPORATION

REGISTERED PROFESSIONAL ENGINEER — DUSTIN G. LEE — No. S6623 — EXP. 3/31/25 — STRUCTURAL — STATE OF CALIFORNIA

CONSULTANT

CORNERSTONE
structural engineering group
986 W. Alluvial, Suite 201
Fresno, California 93711
559.320.3200
fax 559.320.3201

AGENCY

PORTERVILLE COMMUNITY CENTER
N 4TH ST, PORTERVILLE, CA 93257

TYPICAL DETAILS No. 6

NO.	REVISION	DATE
△		
△		
△		
△		
△		
△		

PROJECT MANAGER
DRAWN BY — CHECKED BY
DATE 09.10.24
PROJECT NUMBER 2883-01-RC22
SHEET S-106

CONSTRUCTION DOCUMENTS

9/10/2024 2:25:02 PM
\\cseg-fr-fs01\frhome$\markw\Porterville_2022_Structural_danderson@cseg.com.rvt

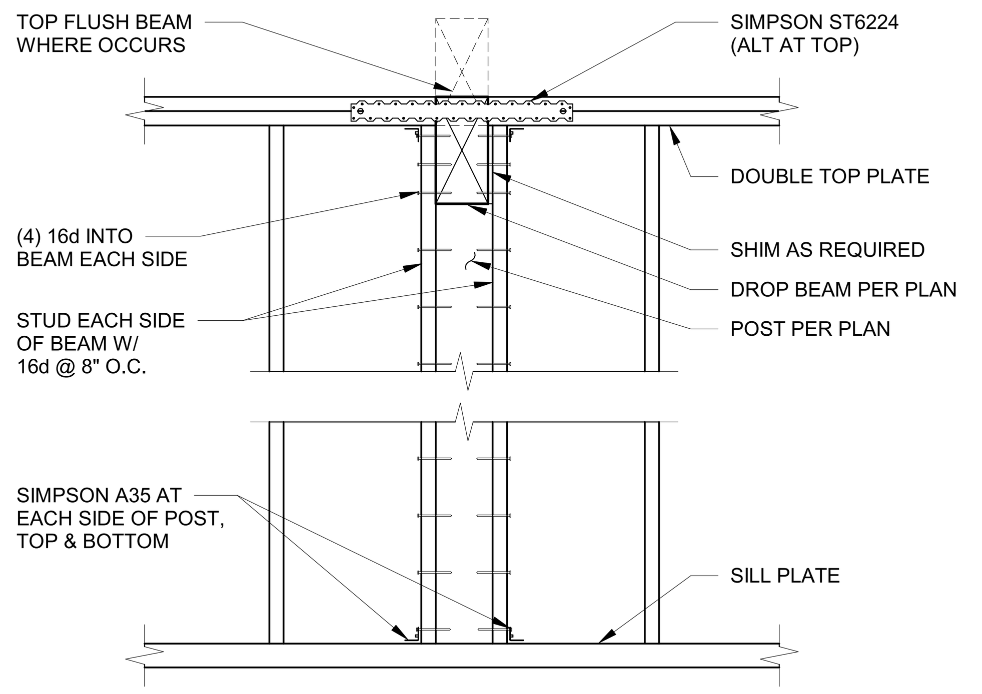

NOTE: TYPICAL U.N.O. SEE PLAN FOR SPECIFIC POST DETAILS.

POST IN WALL
1 / S-107

3/4" = 1'-0"

SIMPSON CCQ/ECCQ SCHEDULE		
BEAM	POST	COLUMN CAP
4x	4x6	SIMPSON CCQ46SDS2.5
6x	6x6	SIMPSON CCQ66SDS2.5
GLB 3 1/8	4x6	SIMPSON CCQ3-6SDS2.5
GLB 5 1/8	6x6	SIMPSON CCQ5-6SDS2.5
6x	HSS	SIMPSON CCOQ6-SDS2.5
GLB 5 1/8	HSS	SIMPSON CCOQ5-SDS2.5

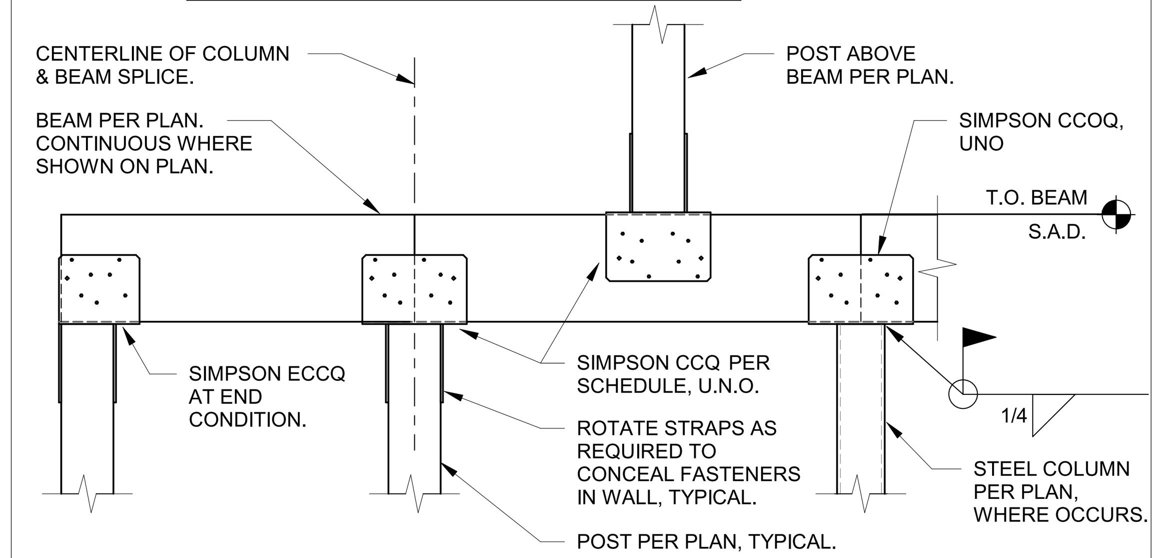

BEAM TO POST CONNECTION
2 / S-107

3/4" = 1'-0"

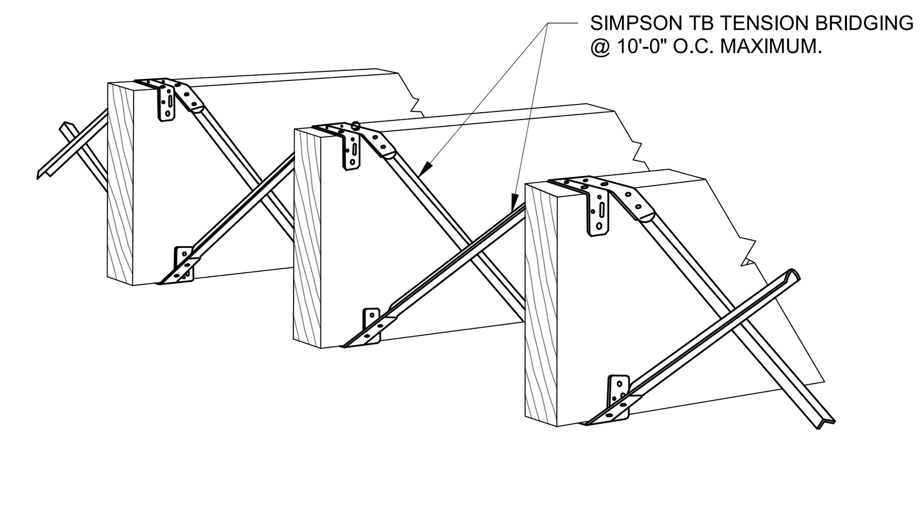

NOTE:
1. TENSION BRIDGING IS REQUIRED AT 10'-0" O.C. IN FLOORS & ROOFS, U.N.O.
2. TENSION BRIDGING SHALL BE USED IN CROSS PAIRS FULL LENGTH OF FLOOR.
3. INSTALL BRIDGING TIGHTLY.
4. REFER TO MANUFACTURER FOR ADDITIONAL INFORMATION.

CROSS BRIDGING
3 / S-107

1 1/2" = 1'-0"

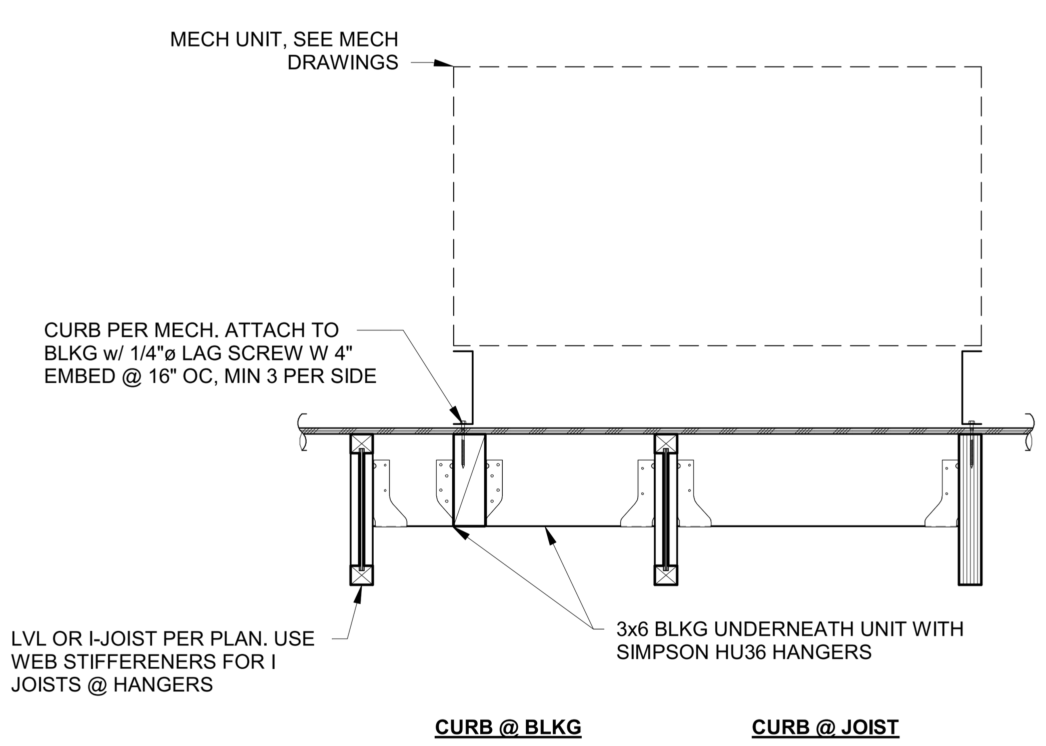

TYPICAL MECHANICAL CURB DETAIL
4 / S-107

1" = 1'-0"

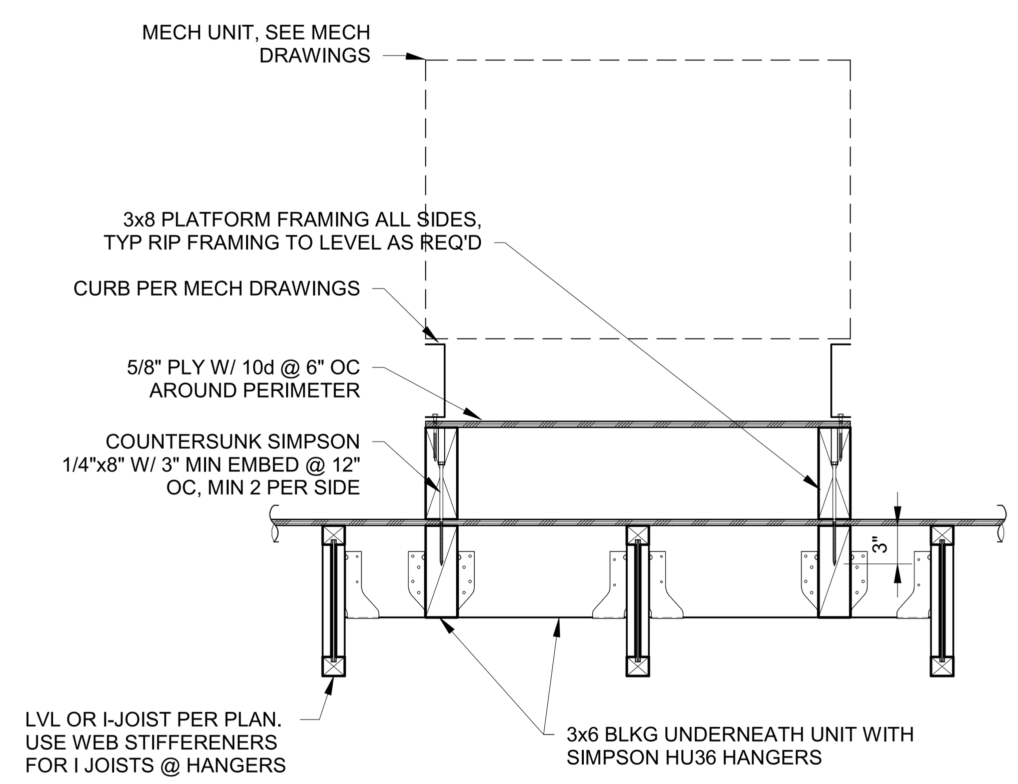

TYPICAL MECHANICAL PLATFORM DETAIL
5 / S-107

1" = 1'-0"

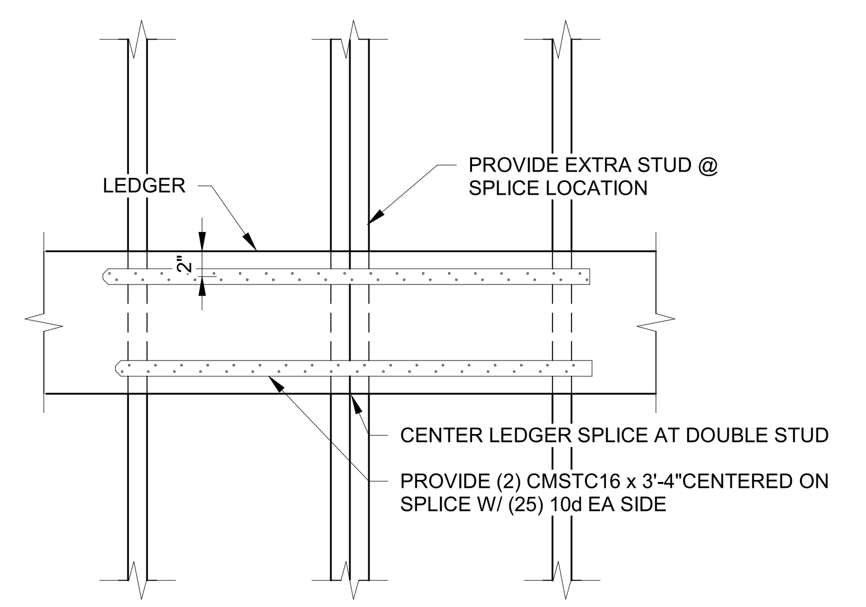

TYPICAL LEDGER SPLICE DETAIL
6 / S-107

1" = 1'-0"

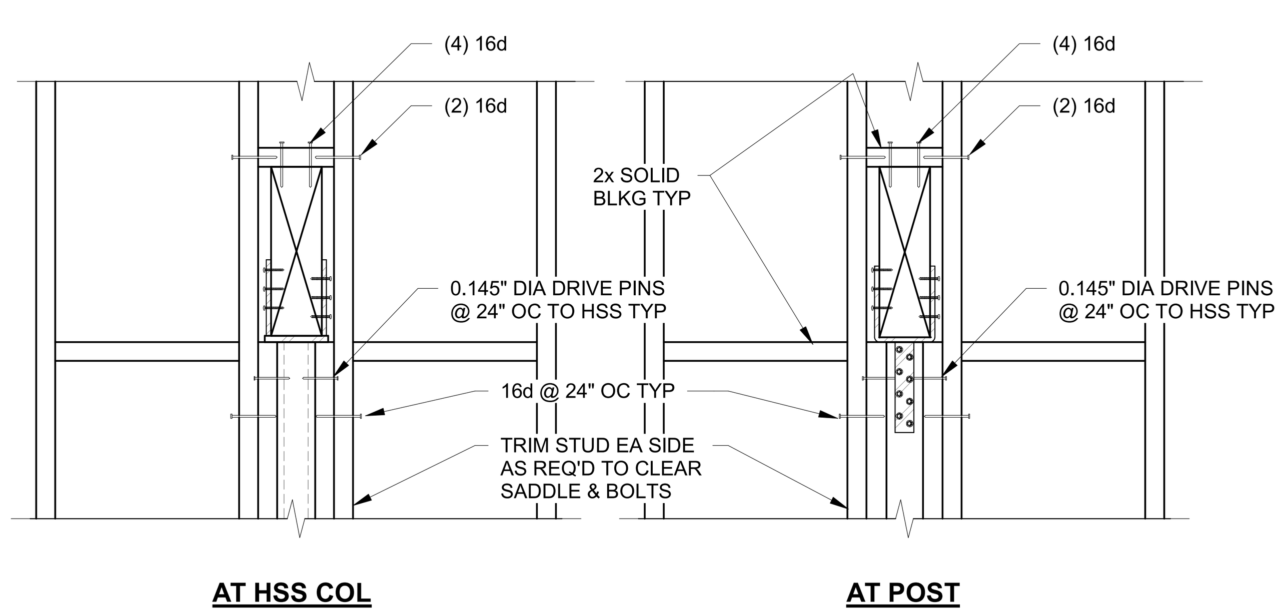

TYP GLB/LVL BEAM INTO STUD WALL
7 / S-107

1" = 1'-0"

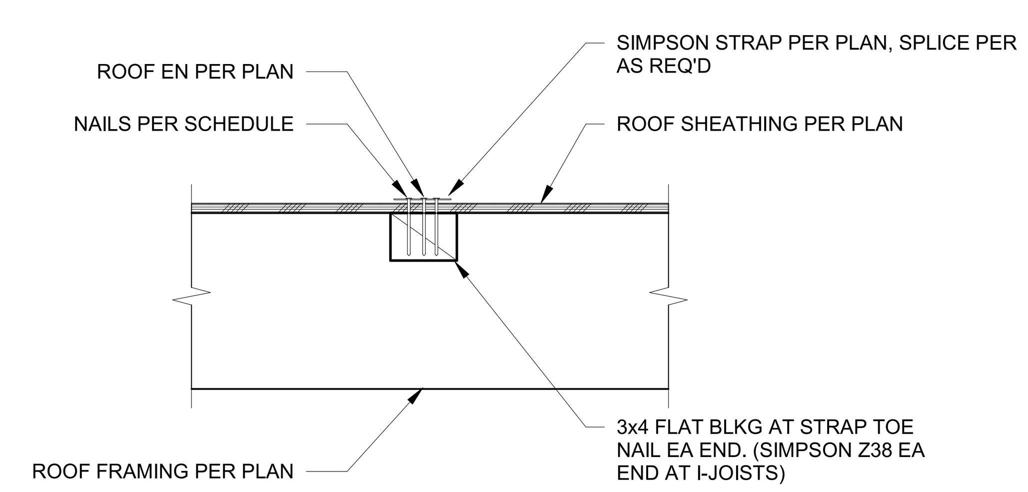

MODEL No.	NAILING
CS	10d @ 4 1/8" oc STAGG'D
CMST	10d @ 3 1/2" oc STAGG'D
CMSTC	10d @ 3" OC STAGG'D

TYPICAL STRAP ON ROOF
8 / S-107

1 1/2" = 1'-0"

MINIMUM NAILING SCHEDULE

CONNECTION	NAILING[1]
1. JOIST TO SILL GIRDER, TOENAIL 8 - INCH JOIST OR LESS FOR EACH ADDITIONAL 4 INCHES IN DEPTH OF JOIST	 3 - 16d 1 - 16d
2. BRIDGING TO JOIST, TOENAIL EACH END a. BLOCKING BETWEEN JOISTS OR RAFTERS - TO JOIST OR RAFTERS - TOENAILS EACH SIDE, EACH END b. BLOCKING BETWEEN STUDS, EACH END	2 - 8d 2 - 10d[12] 2 - 10d TOENAILS OR 2 - 16d
3. 1" x 6" (25mm x 152mm) SUBFLOOR OR LESS TO EACH JOIST, FACE NAIL.	2 - 8d
4. WIDER THAN 1" x 6" (25mm x 152mm) SUBFLOOR TO EACH JOIST, FACE NAIL.	3 - 8d
5. 2" (51mm) SUBFLOOR TO JOIST OR GIRDER, BLIND AND FACE NAIL	2 - 16d
6. SOLE PLATE TO JOIST OR BLOCKING, TYPICAL FACE NAIL. SOLE PLATE TO JOIST BLOCKING, AT BRACED WALL PANELS.	16d AT 16" (406mm) O.C. 3 - 16d PER 16" (406mm)
7. TOP PLATE TO STUD, END NAIL.	2 - 16d
8. STUD TO SOLE PLATE.	4 - 8d, TOENAIL OR 2 - 16d, END NAIL
9. DOUBLE STUDS, FACE NAIL.	16d AT 24" (610mm) O.C.
10. DOUBLED TOP PLATES, TYPICAL FACE NAIL. DOUBLED TOP PLATES, LAP SPLICE.	16d AT 16" (406mm) O.C. 8 - 16d
11. BLOCKING BETWEEN JOISTS OR RAFTERS TO TOP PLATE, TOENAIL	3 - 8d
12. RIM JOIST TO TOP PLATE, TOENAIL	8d AT 6" (152mm) O.C.
13. TOP PLATES, LAPS AND INTERSECTIONS, FACE NAIL.	2 - 16d
14. CONTINUOUS HEADER, TWO PIECES.	16d AT 16" (406mm) O.C. ALONG EACH EDGE
15. CEILING JOISTS TO PLATE, TOENAIL.	3 - 8d
16. CONTINUOUS HEADER TO STUD, TOENAIL.	4 - 8d
17. CEILING JOISTS, LAPS OVER PARTITIONS, FACE NAIL.	3 - 16d
18. CEILING JOISTS TO PARALLEL RAFTERS, FACE NAIL.	3 - 16d
19. JOIST OR RAFTERS AT ALL BEARINGS - TOENAILS, EACH SIDE.	3 - 8d
20. 1" (25mm) BRACE TO EACH STUD AND PLATE, FACE NAIL.	2 - 8d
21. 1" x 8" (25mm x 203mm) SHEATHING OR LESS TO EACH BEARING, FACE NAIL.	3 - 8d
22. WIDER THAN 1" x 8" (25mm x 203mm) SHEATHING TO EACH BEARING, FACE NAIL.	3 - 8d
23. BUILT - UP CORNER STUDS.	16d AT 24" (610mm) O.C.
24. BUILT - UP GIRDER AND BEAMS.	20D AT 32" (813mm) O.C. AT TOP AND BOTTOM AND STAGGERED 2 - 20d AT ENDS AND AT EACH SPLICE
25. 2" (51mm) PLANKS	2 - 16d AT EACH BEARING
26. COLLAR TIE TO RAFTER, FACE NAIL.	3 - 10d
27. JACK RAFTER TO HIP.	3 - 10d, TOENAIL OR 2 - 16d, FACE NAIL
28. ROOF RAFTER TO 2x RIDGE BEAM	2 - 10d, TOENAIL OR 2 - 16d, FACE NAIL
29. JOIST TO BAND JOIST, FACE NAIL	3 - 16d
30. LEDGER STRIP, FACE NAIL.	3 - 16d
31. WOOD STUCTURAL PANELS AND PARTICLEBOARD:[2] SUBFLOOR AND WALL SHEATHING (TO FRAMING): 1/2" (12.7 mm) AND LESS 19/32" - 3/4" (15mm - 19mm) 7/8" - 1" (22mm - 25mm) COMBINATION SUBFLOOR - UNDERLAYMENT (TO FRAMING): 3/4" (19mm) AND LESS 7/8" - 1" (22mm - 25mm) 1 1/8" - 1 1/4" (29mm - 32mm)	 6d[3] 8d OR 6d[5] 8d[3] 10d OR 8d[5] 6d[5] 8d[5] 10d OR 8d[5]
32. PANEL SIDING (TO FRAMING[2]) : 1/2" (12.7mm) AND LESS 5/8" (16mm)	 6d[6] 8d[6]
33. FIBERBOARD SHEATHING: 1/2" (12.7mm) 25/32" (20mm)	 No. 11 ga.[8] 6d[4] No. 16 ga.[9] No. 11 ga.[8] 8d[4] No. 16 ga.[9]
34. INTERIOR PANELING: 1/4" (6.4mm) 3/8" (9.5mm)	 4d[10] 6d[11]

1 COMMON NAILS SHALL BE USED EXCEPT WHERE OTHERWISE STATED.
2 NAILS SPACED AT 6 INCHES (152mm) ON CENTER AT EDGES, 12 INCHES (305mm) AT INTERMEDIATE SUPPORTS EXCEPT 6 INCHES (152mm) AT ALL SUPPORTS WHERE SPANS ARE 48 INCHES (1219mm) OR MORE. FOR NAILING OF WOOD STRUCTURAL PANEL AND PARTICLEBOARD DIAPHRAGMS AND SHEAR WALLS, REFER TO SECTION 2305. NAILS FOR WALL SHEATHING MAY BE COMMON.
3 COMMON OR DEFORMED SHANK.
4 COMMON.
5 DEFORMED SHANK.
6 CORROSION-RESISTANT SIDING OR CASING NAILS CONFORMING TO THE REQUIREMENTS OF SECTION 2304.10.1.1.
7 FASTENERS SPACED 3 INCHES (76mm) ON CENTER AT EXTERIOR EDGES AND 6 INCHES (152mm) ON CENTER AT INTERMEDIATE SUPPORTS.
8 CORROSION-RESISTANT ROOFING NAILS WITH 7/16-INCH-DIAMETER (11mm) HEAD AND 11/2-INCH (38mm) LENGTH FOR 1/2-INCH (12.7mm) SHEATHING AND 13/4-INCH (44mm) LENGTH FOR 25/32-INCH (20mm) SHEATHING CONFORMING TO THE REQUIREMENTS OF SECTION 2304.9.1.1.
9 CORROSION-RESISTANT STAPLES WITH NOMINAL 7/16-INCH (11mm) CROWN AND 11/8-INCH (29mm) LENGTH FOR 1/2-INCH (12.7mm) SHEATHING AND 11/2-INCH (38mm) LENGTH FOR 25/32-INCH (20mm) SHEATHING CONFORMING TO THE REQUIREMENTS OF SECTION 2304.9.1.1.
10 PANEL SUPPORTS AT 16 INCHES (406mm) [20 INCHES (508mm) IF STRENGTH AXIS IN THE LONG DIRECTION OF THE PANEL, UNLESS OTHERWISE MARKED]. CASING OF FINISH NAILS SPACED 6 INCHES (152mm) ON PANEL EDGES. 12 INCHES (305mm) AT INTERMEDIATE SUPPORTS.
11 PANEL SUPPORTS AT 24 INCHES (610mm). CASING OR FINISH NAILS SPACED 6 INCHES (152mm) ON PANEL EDGES, 12 INCHES (305mm) AT INTERMEDIATE SUPPORTS.
12 WHEN POSSIBLE, NAILS DRIVEN PERPENDICULAR TO GRAIN SHALL BE USED INSTEAD OF TOENAILS.

rrm design group
rrmdesign.com | (805) 543-1794
3765 SOUTH HIGUERA STREET, SUITE 102
SAN LUIS OBISPO, CA 93401

THE INCLUDED DRAWINGS, SPECIFICATIONS, IDEAS, DESIGNS AND ARRANGEMENTS REPRESENTED THEREBY ARE AND SHALL REMAIN THE PROPERTY OF RRM DESIGN GROUP AND NO PART THEREOF SHALL BE COPIED, DISCLOSED TO OTHERS OR USED IN CONNECTION WITH ANY WORK OR PROJECT OTHER THAN THE SPECIFIED PROJECT FOR WHICH THEY HAVE BEEN PREPARED AND DEVELOPED WITHOUT THE WRITTEN CONSENT OF RRM DESIGN GROUP. VISUAL CONTACT WITH THESE DRAWINGS OR SPECIFICATIONS SHALL CONSTITUTE CONCLUSIVE EVIDENCE OF ACCEPTANCE OF THESE RESTRICTIONS. SUBMITTAL OF THESE DOCUMENTS FOR PUBLIC AGENCY REVIEW SHALL NOT BE CONSIDERED A WAIVER OF RRM DESIGN GROUP'S RIGHTS.
RRM DESIGN GROUP COPYRIGHT 2023
RRM IS A CALIFORNIA CORPORATION

REGISTERED PROFESSIONAL ENGINEER
DUSTIN G. LEE
No. S6623
EXP. 3/31/25
STRUCTURAL
STATE OF CALIFORNIA

CONSULTANT

CORNERSTONE
structural engineering group
986 W. Alluvial, Suite 201
Fresno, California 93711
559.320.3200
fax 559.320.3201

AGENCY

PORTERVILLE COMMUNITY CENTER
N 4TH ST, PORTERVILLE, CA 93257
TYPICAL DETAILS No. 7

NO.	REVISION	DATE
△		
△		
△		
△		
△		
△		

PROJECT MANAGER
DRAWN BY
CHECKED BY
DATE
09.10.24
PROJECT NUMBER
2883-01-RC22
SHEET
S-107

CONSTRUCTION DOCUMENTS

9/10/2024 2:25:02 PM
\\cseg-fr-fs01\frhome$\markw\Porterville_2022_Structural_danderson@cseg.com.rvt

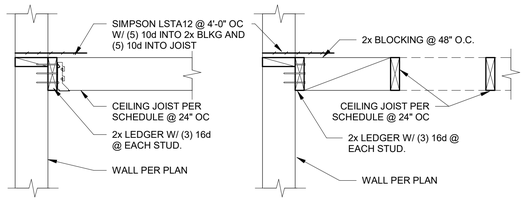

PERPENDICULAR TO STUD **PARALLEL TO STUD**

CEILING JOIST SCHEDULE					
JOIST	MAX SPAN		LEDGER NAILS	BOLT SPACING	BLOCKING
	INT. COND. GYP BOARD	EXT. COND. PLASTER			
2x6 @ 24" oc	10'-0"	9'-0"	(2) 16d	48" OC	@ MIDSPAN
2x8 @ 24" oc	14'-0"	12'-0"	(3) 16d	32" OC	@ 1/3 PTS
2x10 @ 24" oc	16'-0"	15'-0"	(3) 16d	32" OC	@ 1/3 PTS

NOTES:
1. SEE ARCHITECTURAL DRAWINGS FOR CEILING LOCATIONS AND FRAMING DETAILS NOT NOTED.
2. RUN WALL PLYWOOD CONTINUOUS PAST LEDGER AS OCCURS.
3. USE SIMPSON LUS HANGERS OR EQUIVALENT
4. SEE PLAN FOR CEILING JOIST SIZE @ STORAGE AREAS.
5. DESIGN LOADS: DL = 8PSF AT GYP BD, 13 PSF AT PLASTER, LL = 10 PSF, W = VARIES AT FIRE RATED CONSTRUCTION, SPACE CEILING JOISTS @ 16" OC WHERE REQUIRED PER ARCH DRAWINGS.
6. SEE 3/S-108 FOR FRAMING OPENINGS OR RECESSED FRAMES

WOOD CEILING JOIST FRAMING DETAIL — 1 / S-108

1" = 1'-0"

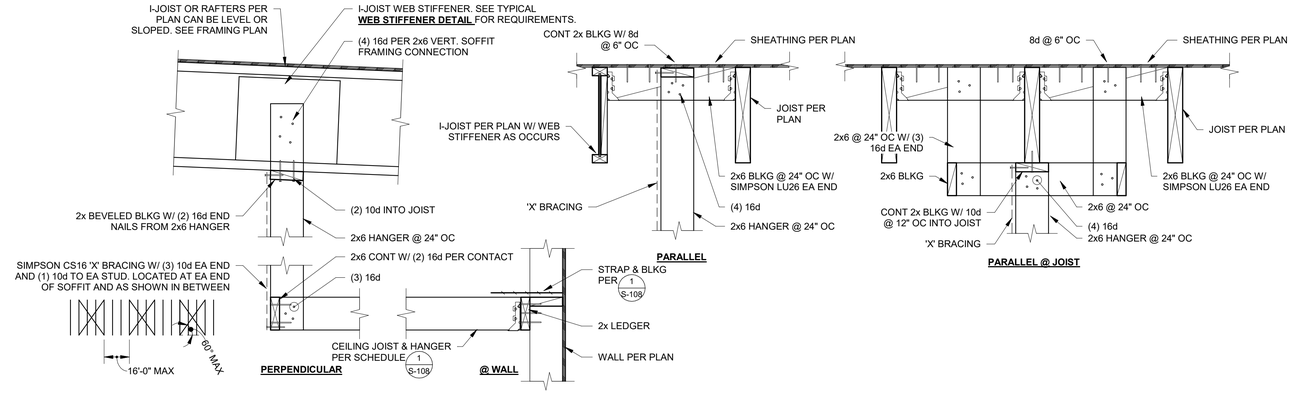

SOFFIT FRAMING — 2 / S-108

1" = 1'-0"

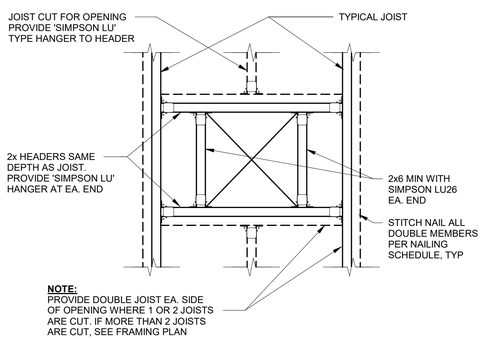

WOOD - TYP FRMG AT CLG OPENINGS — 3 / S-108

NO SCALE

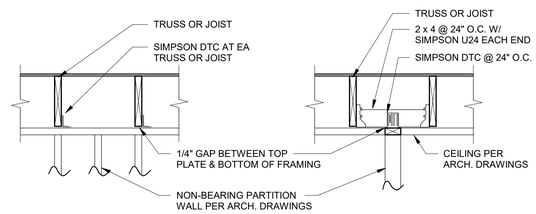

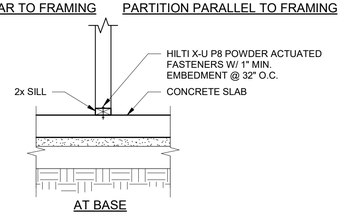

NON-BEARING WALL PARTITION — 4 / S-108

3/4" = 1'-0"

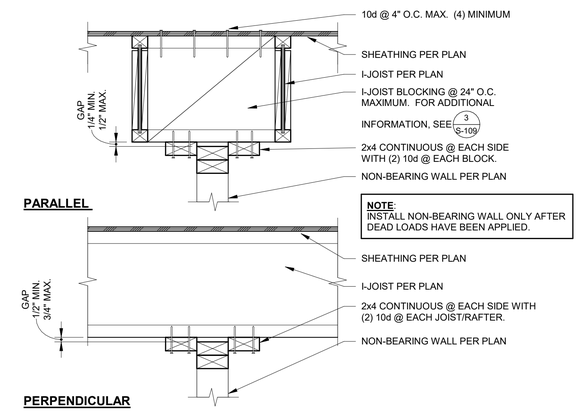

NON-BEARING WALL — 5 / S-108

1 1/2" = 1'-0"

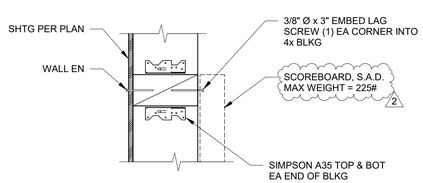

1

TYPICAL SCOREBOARD ANCHORAGE — 6 / S-108

1 1/2" = 1'-0"

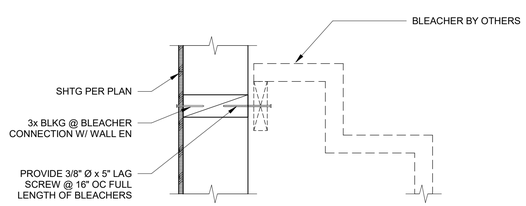

1

TYPICAL BLEACHER ANCHORAGE — 7 / S-108

1 1/2" = 1'-0"

rrm design group
rrmdesign.com | (805) 543-1794
3765 SOUTH HIGUERA STREET, SUITE 102
SAN LUIS OBISPO, CA 93401

THE INCLUDED DRAWINGS, SPECIFICATIONS, IDEAS, DESIGNS AND ARRANGEMENTS REPRESENTED THEREBY ARE AND SHALL REMAIN THE PROPERTY OF RRM DESIGN GROUP AND NO PART THEREOF SHALL BE COPIED, DISCLOSED TO OTHERS OR SUBSTANTIALLY USED FOR ANY PURPOSE WITHOUT THE PRIOR WRITTEN CONSENT OF RRM DESIGN GROUP. VISUAL CONTACT WITH THESE DRAWINGS OR SPECIFICATIONS SHALL CONSTITUTE CONCLUSIVE EVIDENCE OF ACCEPTANCE OF THESE RESTRICTIONS. SUBMITTAL OF PRELIMINARY DRAWINGS FOR REVIEW SHALL NOT BE CONSIDERED A WAIVER OF RRM DESIGN GROUP'S RIGHTS.
RRM DESIGN GROUP COPYRIGHT 2023
RRM IS A CALIFORNIA CORPORATION

REGISTERED PROFESSIONAL ENGINEER — AUSTIN G. LEE — No. S6623 — EXP. 3/31/25 — STRUCTURAL — STATE OF CALIFORNIA

CONSULTANT

CORNERSTONE structural engineering group
986 W. Alluvial, Suite 201
Fresno, California 93711
559.320.3200
fax 559.320.3201

AGENCY

PORTERVILLE COMMUNITY CENTER
N 4TH ST, PORTERVILLE, CA 93257

TYPICAL DETAILS No. 8

NO.	REVISION	DATE
1	Plan Check Revision 1	5/17/24
2	Plan Check Revision 2	9/9/24

PROJECT MANAGER
DRAWN BY | CHECKED BY
DATE 09.10.24
PROJECT NUMBER 2883-01-RC22
SHEET S-108

CONSTRUCTION DOCUMENTS

9/10/2024 2:25:03 PM
\\ceg-fs01\Homes$\markw\Porterville_2022_Structural_danderson@ceg.com.rvt

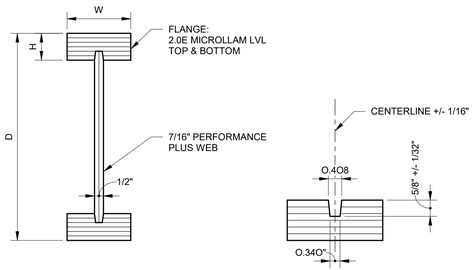

I-JOIST **ROUT DETAIL**

SECTION PROPERTIES @ 100%

JOIST TYPE	D	W	H	EI (JOIST) 10^6 LBS-IN^2	M ALLOW FT-LBS	V ALLOW LBS
RED-I65	18"	2 1/2"	1 1/2"	1,205	10,380	3,080
RED-I65	22"	2 1/2"	1 1/2"	1,934	12,690	3,615

NOTE: FLANGE TOLERANCE 1/32" +/-

I-JOIST SECTION PROPERTIES

NO SCALE

1 / S-109

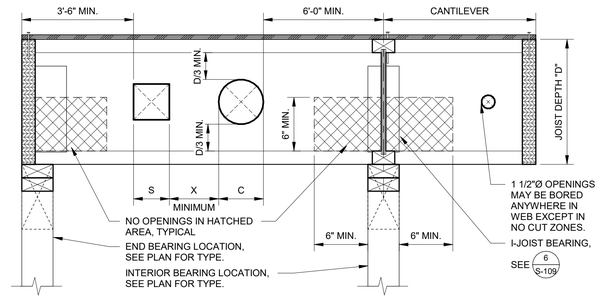

NOTES:
1. ALL OPENINGS LARGER THAN 1 1/2"Ø MUST BE PLACED IN CENTER THIRD OF I-JOIST DEPTH.
2. MAXIMUM SQUARE OPENING SIZE (S) IS 4" SQUARE.
3. MAXIMUM ROUND OPENING SIZE (C) IS 5"Ø.
4. DO NOT CUT FLANGE.
5. WHERE LARGER OPENINGS ARE REQUIRED CONTACT STRUCTURAL ENGINEER PRIOR TO CUTTING FOR ADDITIONAL REINFORCEMENT INFORMATION.
6. THE MINIMUM SPACING "X" SHALL BE THE GREATER OF 2 x S OR 2 x C.
7. NO OPENINGS LARGER THAN 1 1/2" Ø ALLOWED IN CANTILEVER.
8. USE 1/4"Ø PILOT HOLE @ CORNERS OF SQUARE/RECTANGULAR OPENINGS TO PREVENT OVER-CUTTING.

ALLOWABLE OPENINGS IN I-JOISTS

NO SCALE

2 / S-109

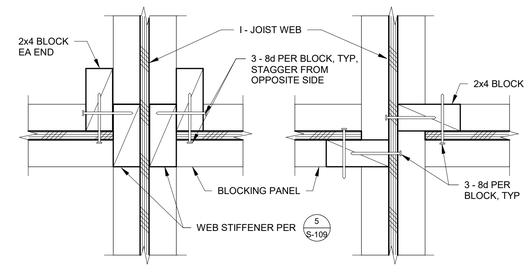

AT I-JOIST BEARING **NOT AT I-JOIST BEARING**

I - JOIST BLOCKING

3" = 1'-0"

3 / S-109

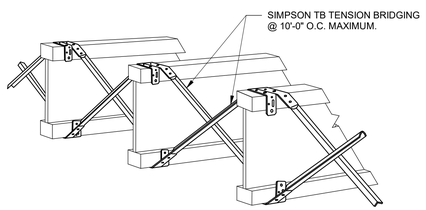

NOTE:
1. TENSION BRIDGING IS REQUIRED AT 10'-0" O.C. IN FLOORS & ROOFS, U.N.O.
2. TENSION BRIDGING SHALL BE USED IN CROSS PAIRS FULL LENGTH OF FLOOR.
3. INSTALL BRIDGING TIGHTLY.
4. REFER TO MANUFACTURER FOR ADDITIONAL INFORMATION.

I-JOIST CROSS BRIDGING

NO SCALE

4 / S-109

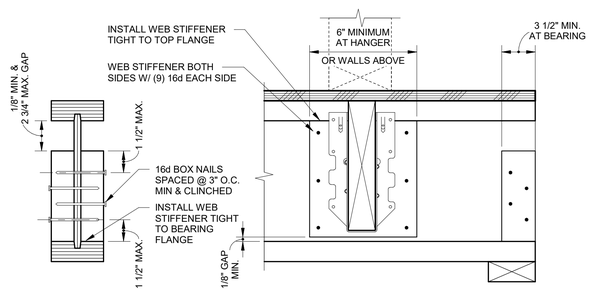

WEB STIFFENER SECTION **WEB STIFFENER ELEVATION**

NOTE:
1. PROVIDE MINIMUM BEARING OF 2 1/2" AT JOIST ENDS AND 5 1/4" AT INTERMEDIATE SUPPORTS U.N.O. ON STRUCTURAL DRAWINGS. NAIL JOISTS AT BEARING WITH 2-10d NAILS (ONE EACH SIDE), 1 1/2" MINIMUM FROM END TO AVOID SPLITTING. ALL BLOCKING SHALL BE GLUED TO WEB.
2. WEB STIFFENERS TO BE MANUFACTURER OR FIELD INSTALLED AT ALL BEARING AND JOIST HANGER LOCATIONS.
3. SEE MANUFACTURER SPECIFICATIONS FOR WEB STIFFENER THICKNESS AND FASTENER INFORMATION.
4. IF MANUFACTURER FASTENER INFORMATION DIFFERS FROM THIS DETAIL, FOLLOW THE MANUFACTURER'S REQUIREMENTS.
5. WHERE BEARING OCCURS AT TOP AND BOTTOM FLANGE, STIFFENER SHALL BE FULL DEPTH OF WEB.

I - JOIST WEB STIFFENER

NO SCALE

5 / S-109

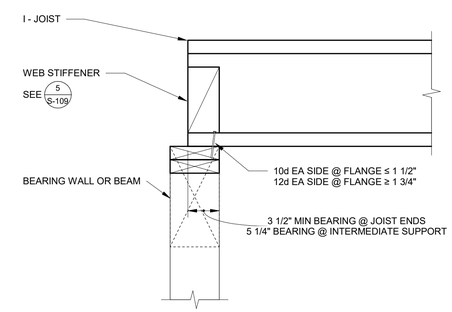

I - JOIST BEARING

1 1/2" = 1'-0"

6 / S-109

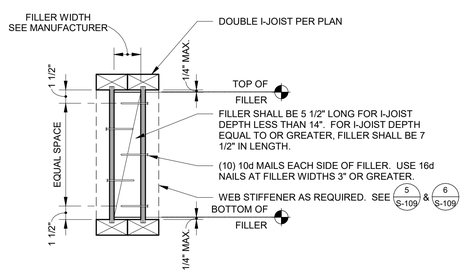

NOTES:
1. WEB FILLER TO BE MANUFACTURED OR FIELD INSTALLED AT 24" O.C. MAXIMUM OR AT JOIST HANGER SPACING, WHICHEVER IS LESS.
2. SEE MANUFACTURER'S SPECIFICATIONS FOR WEB FILLER THICKNESSES AND FASTENER INFORMATION.
3. IF MANUFACTURER'S FASTENER INFORMATION DIFFERS FROM THIS DETAIL, FOLLOW THE MANUFACTURER'S REQUIREMENTS.
4. WHERE BEARING OCCURS ABOVE OR BELOW, FILLER SHALL BE TIGHT AGAINST FLANGE RESPECTIVELY.

DOUBLE I-JOIST FILLER

1 1/2" = 1'-0"

7 / S-109

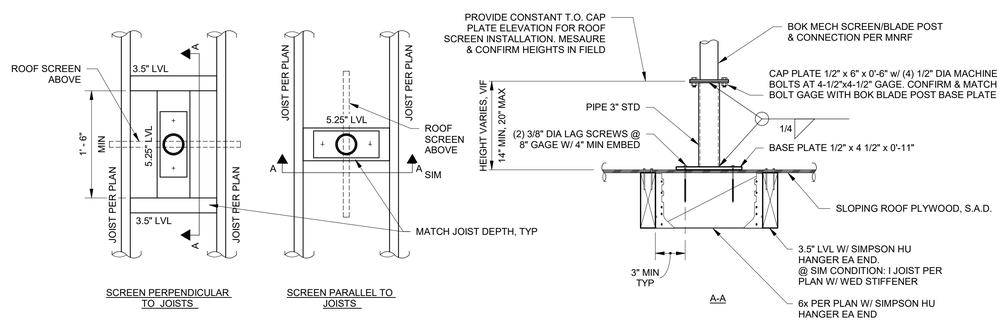

SCREEN PERPENDICULAR TO JOISTS

SCREEN PARALLEL TO JOISTS

A-A

WIND SCREEN BASE ANCHORAGE DETAIL

1" = 1'-0"

8 / S-109

rrm design group
rrmdesign.com | (805) 543-1794
3765 SOUTH HIGUERA STREET SUITE 102
SAN LUIS OBISPO, CA 93401

THE INCLUDED DRAWINGS, SPECIFICATIONS, IDEAS, DESIGNS AND ARRANGEMENTS REPRESENTED THEREBY ARE AND SHALL REMAIN THE PROPERTY OF RRM DESIGN GROUP AND NO PART THEREOF SHALL BE COPIED, DISCLOSED TO OTHERS OR SUBSTANTIALLY USED FOR ANY PURPOSE WHATSOEVER OTHER THAN THE PROJECT FOR WHICH THEY HAVE BEEN PREPARED AND DEVELOPED WITHOUT THE WRITTEN CONSENT OF RRM DESIGN GROUP. VISUAL CONTACT WITH THESE DRAWINGS OR SPECIFICATIONS SHALL CONSTITUTE CONCLUSIVE EVIDENCE OF ACCEPTANCE OF THESE RESTRICTIONS. SUBMITTAL OF PRELIMINARY DRAWINGS FOR REVIEW SHALL NOT BE CONSIDERED A WAIVER OF RRM DESIGN GROUP'S RIGHTS.
RRM DESIGN GROUP COPYRIGHT 2023
RRM IS A CALIFORNIA CORPORATION

REGISTERED PROFESSIONAL ENGINEER
AUSTIN G. LEE
No. S6623
EXP. 3/31/25
STRUCTURAL
STATE OF CALIFORNIA

CONSULTANT

CORNERSTONE
structural engineering group
986 W. Alluvial, Suite 201
Fresno, California 93711
559.320.3200
fax 559.320.3201

AGENCY

PORTERVILLE COMMUNITY CENTER
N 4TH ST, PORTERVILLE, CA 93257

TYPICAL DETAILS No. 9

NO.	REVISION	DATE

CONSTRUCTION DOCUMENTS

PROJECT MANAGER

DRAWN BY | CHECKED BY

DATE
09.10.24

PROJECT NUMBER
2883-01-RC22

SHEET
S-109

9/10/2024 2:25:03 PM
\\seg-fr-fs01\Homes$\markw\Porterville_2022_Structural_danderson@seg.com.rvt

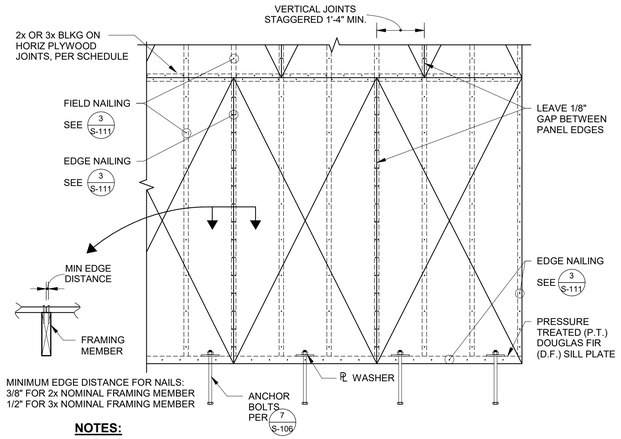

NOTES:

1. HOLDOWN BOLTS SHALL NOT REPLACE ANCHOR BOLTS.
2. RETIGHTEN ALL ANCHOR BOLTS AND HOLDOWN NUTS PRIOR TO CLOSING FRAMING.
3. NAILS SHALL BE COMMON AND HAVE MIN 1 5/8" PENETRATION INTO HOLDING MEMBER.
4. PREDRILL HOLES AS REQUIRED TO AVOID SPLITTING.
5. MINIMUM PLYWOOD WIDTH IS 12".
6. UPSET THREAD BOLTS ARE NOT PERMITTED.

ELEVATION

SHEARWALL SCHEDULE - WOOD

ZONE	ALLOWABLE SHEAR	PLYWOOD	EDGE NAILING	FIELD NAILING	BOLTED PLATE CONNECTION	SCREWED PLATE CONNECTION	BLOCKING	A35 SPACING	REMARKS
A	260 PLF	15/32" CDX	8d @ 6" OC	8d @ 12" OC	AB @ 48" OC	1/4" x 6" SDS @ 24" OC	2x	24" OC	1, 3, 4
B	380 PLF	15/32" CDX	8d @ 4" OC	8d @ 12" OC	AB @ 32" OC	1/4" x 6" SDS @ 16" OC	2x	16" OC	2, 3, 4
C	490 PLF	15/32" CDX	8d @ 3" OC	8d @ 12" OC	AB @ 32" OC	1/4 x 6" SDS @ 12" OC	3x	16" OC	2, 3, 4
D	640 PLF	15/32" CDX	8d @ 2" OC	8d @ 12" OC	AB @ 24" OC	1/4 x 6" SDS @ 8" OC	3x	12" OC	2, 3, 4

NOTE:
WHEN PLY IS SHOWN BOTH SIDES, OFFSET PANEL JOINTS EACH SIDE OF WALL TO FALL ON DIFFERENT FRAMING MEMBERS. INSTALL 3x OR WIDER FRAMING & BLOCKING AT ALL ADJOINING PANEL EDGES. ANCHOR BOLT, SCREW & A35/LTP4 SPACING SHOULD BE HALVED.

REMARKS:

1. INSTALL 2x OR WIDER FRAMING & BLOCKING AT ALL ADJOINING PANEL EDGES.
2. INSTALL 3x OR WIDER FRAMING & BLOCKING WITH STAGGERED EDGE NAILING AT ALL ADJOINING PANEL EDGES. STRUCTURALLY ACCEPTABLE TO USE (2) 2x INSTEAD OF 3x AT ADJOINING PANEL EDGES. NAIL (2) 2x TOGETHER WITH 16d STAGGERED @ WALL EDGE NAIL SPACING.
3. FASTENERS SHALL BE COMMON.
4. PLYWOOD SHALL BE EDGE FASTENED AT ALL PANEL EDGES, TOP PLATES, SILL PLATES, HOLDOWN STUDS, WOOD POSTS AND BLOCKING LOCATIONS AS WELL AS OTHER LOCATIONS SHOWN IN THE DRAWINGS.
5. WHEN NAILING IS SPECIFIED AT AN (E) 2x STUDWALL, PROVIDE ADDITIONAL 2x FRAMING AT PANEL EDGES. EDGE NAIL ONE PANEL TO EA 2x STAGGERED PER SCHEDULE. INTERNAIL DOUBLE 2x W/ 2 ROWS OF 10d @ 8" OC STAGGERED.

PLYWOOD SHEARWALL

NO SCALE

1 / S-110

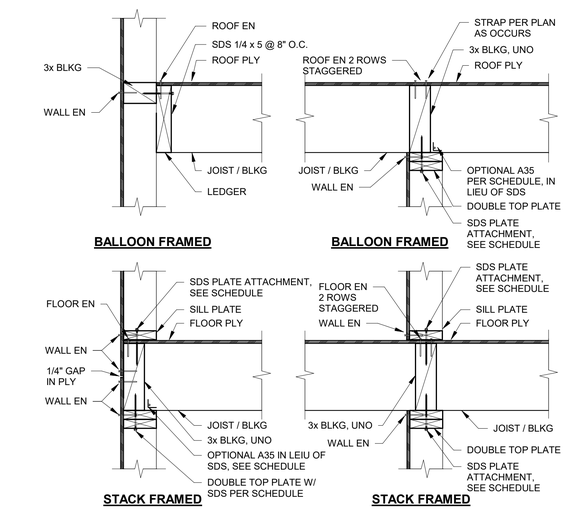

TYPICAL EXTERIOR WALL

TYPICAL INTERIOR WALL

NOTES:

1. FRAMING AND CONNECTIONS SHOWN ARE FOR LATERAL SYSTEM LOAD TRANSFER ONLY. SEE PLANS AND DETAILS FOR ADDITIONAL VERTICAL SUPPORT FRAMING.
2. PROVIDE STANDARD CUT WASHER BETWEEN NUT & BPS PLATE.

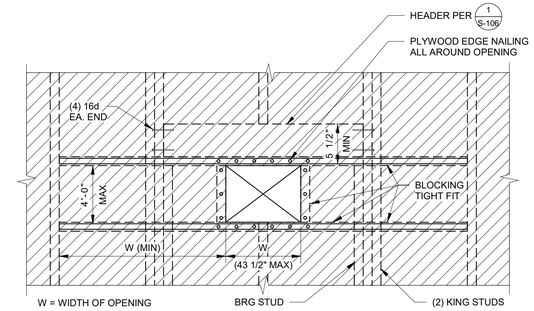

NOTE:
THIS DETAIL APPLIES TO ALL HOLES THRU SHEARWALLS UON. SEE DETAIL 3 S-110 FOR HOLES WHICH DO NOT CUT THRU STUDS.

HOLES IN SHEARWALL (CUT 1 OR 2 STUDS)

1" = 1'-0"

2 / S-110

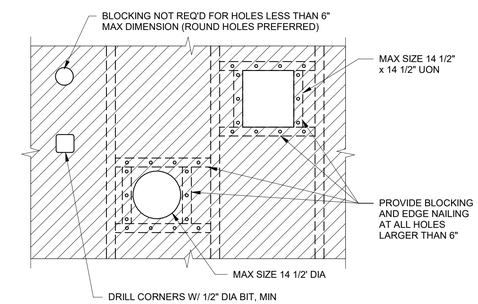

NOTE:
THIS DETAIL APPLIES TO ALL HOLES THRU SHEARWALLS UON. SEE DETAIL 2 S-110 FOR HOLES WHICH CUT THRU STUDS OR EXCEED THESE DIMENSIONS.

HOLES IN SHEARWALL (CUTTING NO STUDS)

1" = 1'-0"

3 / S-110

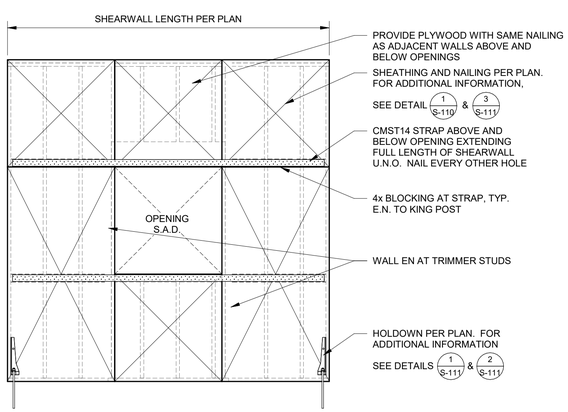

STRAPPED SHEARWALL ELEVATION

3/8" = 1'-0"

4 / S-110

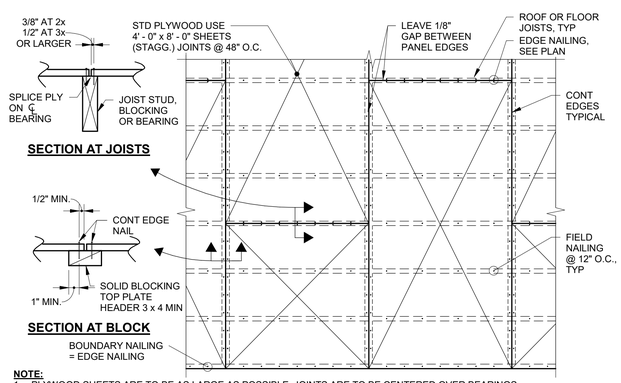

NOTE:
1. PLYWOOD SHEETS ARE TO BE AS LARGE AS POSSIBLE. JOINTS ARE TO BE CENTERED OVER BEARINGS.
2. SHEET SIZE LESS THAN 24" IN DIMENSION NOT PERMITTED. STAGGER ALL END JOINTS OF SHEATHING. OUTSIDE FACE GRAINS TO RUN PERPENDICULAR TO BEARING. BLOCKING ALL JOINTS AND EDGES.

PLYWOOD DIAPHRAGM FRAMING

1/2" = 1'-0"

5 / S-110

rrm design group
rrmdesign.com | (805) 543-1794
3765 SOUTH HIGUERA STREET, SUITE 102
SAN LUIS OBISPO, CA 93401

THE INCLUDED DRAWINGS, SPECIFICATIONS, IDEAS, DESIGNS AND ARRANGEMENTS REPRESENTED THEREBY ARE AND SHALL REMAIN THE PROPERTY OF RRM DESIGN GROUP AND NO PART THEREOF SHALL BE COPIED, DISCLOSED TO OTHERS OR SUBSTANTIALLY USED FOR ANY PURPOSE WITHOUT THE WRITTEN CONSENT OF AN ASSOCIATE OF RRM DESIGN GROUP. THE PROJECT FOR WHICH THEY HAVE BEEN PREPARED AND DEVELOPED WITHOUT THE WRITTEN CONSENT OF RRM DESIGN GROUP, VISUAL CONTACT WITH THESE DRAWINGS OR SPECIFICATIONS SHALL CONSTITUTE CONCLUSIVE EVIDENCE OF ACCEPTANCE OF THESE RESTRICTIONS. SUBMITTAL OF THESE DRAWINGS FOR REGULATORY APPROVAL SHALL NOT BE CONSIDERED AS A WAIVER OF RRM DESIGN GROUP'S RIGHTS.
RRM DESIGN GROUP COPYRIGHT 2023
RRM IS A CALIFORNIA CORPORATION

REGISTERED PROFESSIONAL ENGINEER
AUSTIN G. LEE
No. S6623
EXP. 3/31/25
STRUCTURAL
STATE OF CALIFORNIA

CONSULTANT

CORNERSTONE structural engineering group
986 W. Alluvial, Suite 201
Fresno, California 93711
559.320.3200
fax 559.320.3201

AGENCY

PORTERVILLE COMMUNITY CENTER
N 4TH ST, PORTERVILLE, CA 93257

TYPICAL DETAILS No. 10

NO.	REVISION	DATE

PROJECT MANAGER

DRAWN BY | CHECKED BY

DATE 09.10.24

PROJECT NUMBER 2883-01-RC22

SHEET S-110

CONSTRUCTION DOCUMENTS

9/10/2024 2:25:04 PM
\\ceg-fr-fs01\frhome$\markw\Porterville_2022_Structural_danderson@ceg.com.rvt

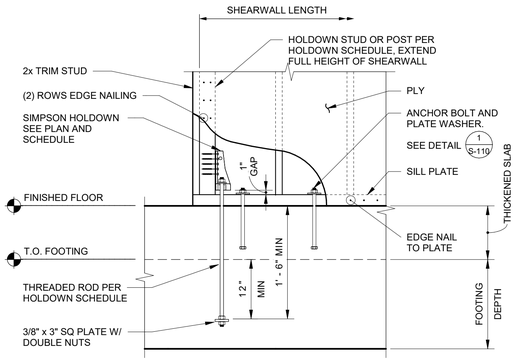

HDU HOLDOWN

HOLDOWN AT FOOTING

3/4" = 1'-0"

1 / S-111

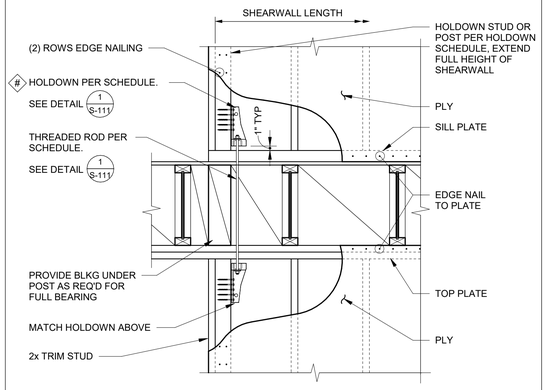

HOLDOWN AT FLOOR/ROOF

NO SCALE

2 / S-111

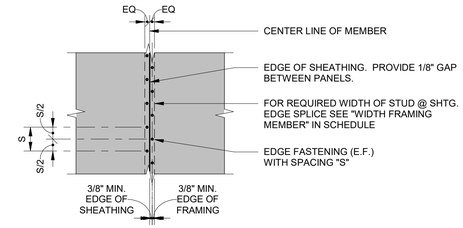

SHEAR PANEL FASTENING AT EDGE/BLOCKING

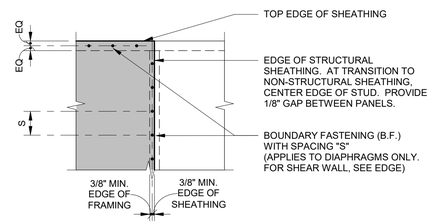

SHEAR PANEL FASTENING AT BOUNDARY

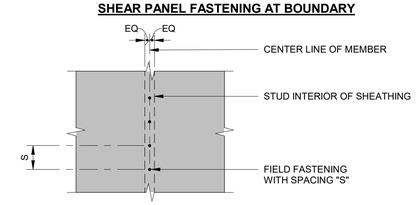

SHEAR PANEL FASTENING AT FIELD/INTERMEDIATE STUD

NOTE: THE FASTENING DESIGNATION 6:6:12 INDICATES (6" O.C. EDGE):(6" O.C. BOUNDARY):(12" O.C. FIELD)

PLY EDGE/BOUNDARY FASTENING

NO SCALE

3 / S-111

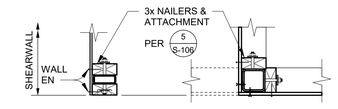

END **CORNER / INTERSECTION**

NOTE: WHEN HSS POST IS ADJACENT TO WALL CORNER OR WALL OPENING, A 4x NAILER SHALL BE USED.

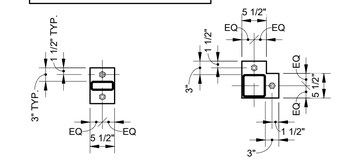

END **CORNER / INTERSECTION**

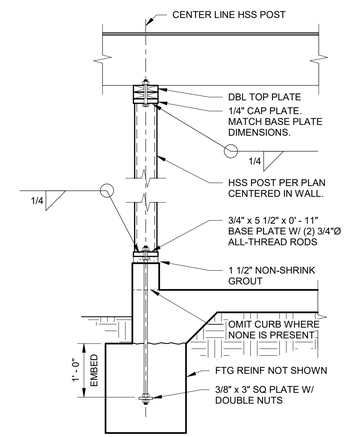

HSS HOLDOWN

NO SCALE

4 / S-111

HOLDOWN SCHEDULE - SIMPSON WOOD					
TYPE	DESCRIPTION	No. OF FASTENERS TO POST	THREADED ROD DIAMETER (ASTM F1554 GR-36)	END POST	SERVICE LOAD CAPACITY (LBS)
1	HDU2-SDS2.5	(6) - SDS 1/4"x2 1/2"	5/8"	4x6 MIN.	3,075#
2	HDU5-SDS2.5	(14) - SDS 1/4"x2 1/2"	5/8"	4x6 MIN.	5,645#
3	HDU8-SDS2.5	(20) - SDS 1/4"x2 1/2"	7/8"	6x	7,870#
4	HDU11-SDS2.5	(30) - SDS 1/4"x2 1/2"	1"	6x	9,535#
5	HDU14-SDS2.5	(36) - SDS 1/4"x2 1/2"	1"	6x	14,445#

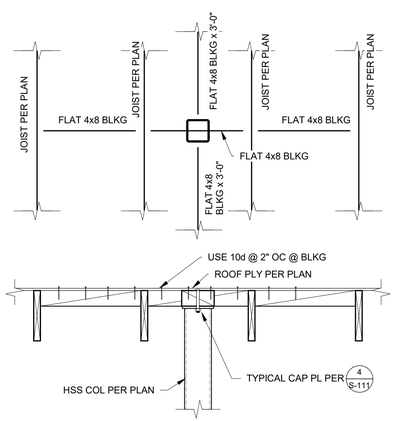

TYPICAL TOP OF HSS AT ROOF

3/4" = 1'-0"

5 / S-111

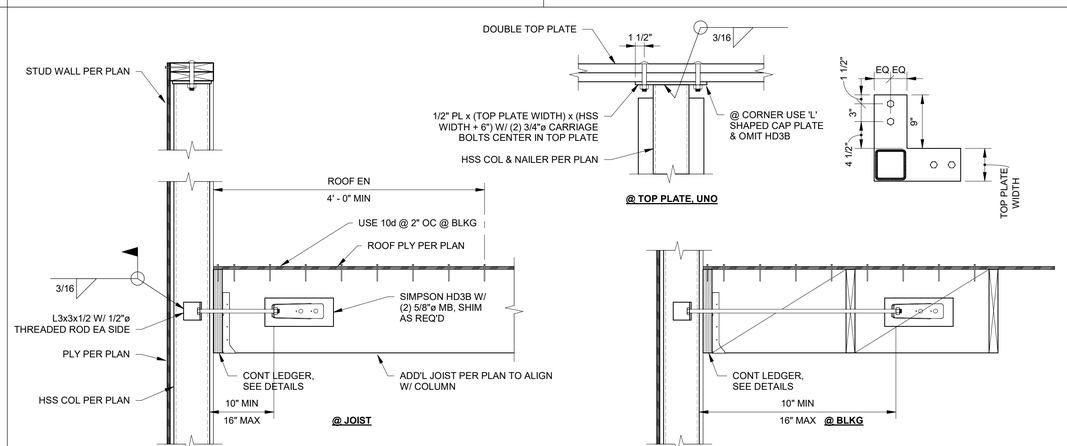

TYPICAL TOP OF HSS IN WALL

1" = 1'-0"

6 / S-111

rrm design group
rrmdesign.com | (805) 543-1794
3765 SOUTH HIGUERA STREET SUITE 102
SAN LUIS OBISPO, CA 93401

THE INCLUDED DRAWINGS, SPECIFICATIONS, IDEAS, DESIGNS AND ARRANGEMENTS REPRESENTED THEREBY ARE AND SHALL REMAIN THE PROPERTY OF RRM DESIGN GROUP AND NO PART THEREOF SHALL BE COPIED, DISCLOSED TO OTHERS OR SUBSTANTIALLY USED FOR ANY PURPOSE WITHOUT THE PERMISSION OF RRM DESIGN GROUP, PROJECT FOR WHICH THEY HAVE BEEN PREPARED AND DEVELOPED WITHOUT THE WRITTEN CONSENT OF RRM DESIGN GROUP. VISUAL CONTACT WITH THESE DRAWINGS OR SPECIFICATIONS SHALL CONSTITUTE CONCLUSIVE EVIDENCE OF ACCEPTANCE OF THESE RESTRICTIONS. SUBMITTAL OF PRELIMINARY DRAWINGS FOR REVIEW SHALL NOT BE CONSIDERED A WAIVER OF RRM DESIGN GROUP'S RIGHTS.
RRM DESIGN GROUP COPYRIGHT 2023
RRM IS A CALIFORNIA CORPORATION

REGISTERED PROFESSIONAL ENGINEER
JUSTIN G. LEE
No. S6623
EXP. 3/31/25
STRUCTURAL
STATE OF CALIFORNIA

CONSULTANT

CORNERSTONE structural engineering group
986 W. Alluvial, Suite 201
Fresno, California 93711
559.320.3200
fax 559.320.3201

AGENCY

PORTERVILLE COMMUNITY CENTER
N 4TH ST, PORTERVILLE, CA 93257

TYPICAL DETAILS No. 11

NO.	REVISION	DATE

PROJECT MANAGER
DRAWN BY | CHECKED BY
DATE 09.10.24
PROJECT NUMBER 2883-01-RC22
SHEET S-111

CONSTRUCTION DOCUMENTS

9/10/2024 2:25:04 PM
\\seg-fr-fs01\fmome$\markw\Porterville_2022_Structural_danderson@seg.com.rvt

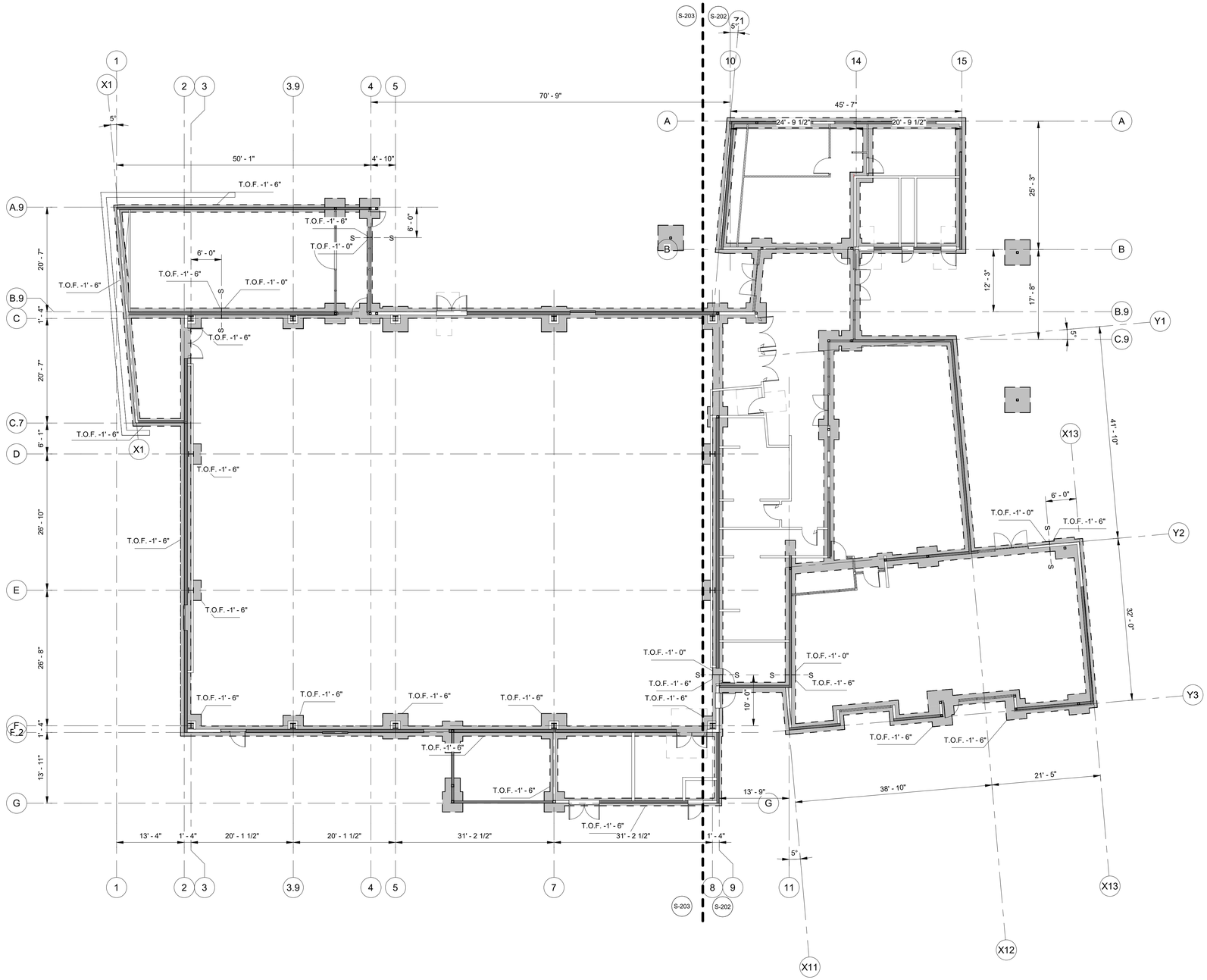

OVERALL FOUNDATION PLAN

3/32" = 1'-0"

rrm design group

rrmdesign.com | (805) 543-1794

3765 SOUTH HIGUERA STREET, SUITE 102

SAN LUIS OBISPO, CA 93401

THE INCLUDED DRAWINGS, SPECIFICATIONS, IDEAS, DESIGNS AND ARRANGEMENTS REPRESENTED THEREBY ARE AND SHALL REMAIN THE PROPERTY OF RRM DESIGN GROUP AND NO PART THEREOF SHALL BE COPIED, DISCLOSED TO OTHERS OR USED IN CONNECTION WITH ANY WORK OR PROJECT OTHER THAN THE SPECIFIED PROJECT FOR WHICH THEY HAVE BEEN PREPARED AND DEVELOPED WITHOUT THE WRITTEN CONSENT OF RRM DESIGN GROUP. VISUAL CONTACT WITH THESE DRAWINGS OR SPECIFICATIONS SHALL CONSTITUTE CONCLUSIVE EVIDENCE OF ACCEPTANCE OF THESE RESTRICTIONS. SUBMITTAL OF THESE DOCUMENTS FOR PUBLIC AGENCY REVIEW SHALL NOT BE CONSIDERED A WAIVER OF RRM DESIGN GROUP'S RIGHTS.

RRM DESIGN GROUP COPYRIGHT 2023

RRM IS A CALIFORNIA CORPORATION

REGISTERED PROFESSIONAL ENGINEER
DUSTIN G. LEE
No. S6623
EXP. 3/31/25
STRUCTURAL
STATE OF CALIFORNIA

CONSULTANT

CORNERSTONE structural engineering group

986 W. Alluvial, Suite 201
Fresno, California 93711
559.320.3200
fax 559.320.3201

AGENCY

PORTERVILLE COMMUNITY CENTER

N 4TH ST, PORTERVILLE, CA 93257

FOUNDATION PLAN

NO.	REVISION	DATE
△		
△		
△		
△		
△		
△		

PROJECT MANAGER

DRAWN BY | CHECKED BY

DATE
09.10.24

PROJECT NUMBER
2883-01-RC22

SHEET
S-201

CONSTRUCTION DOCUMENTS

9/10/2024 2:25:05 PM
\\cseg-fr-fs01\fhome$\markw\Porterville_2022_Structural_danderson@cseg.com.rvt

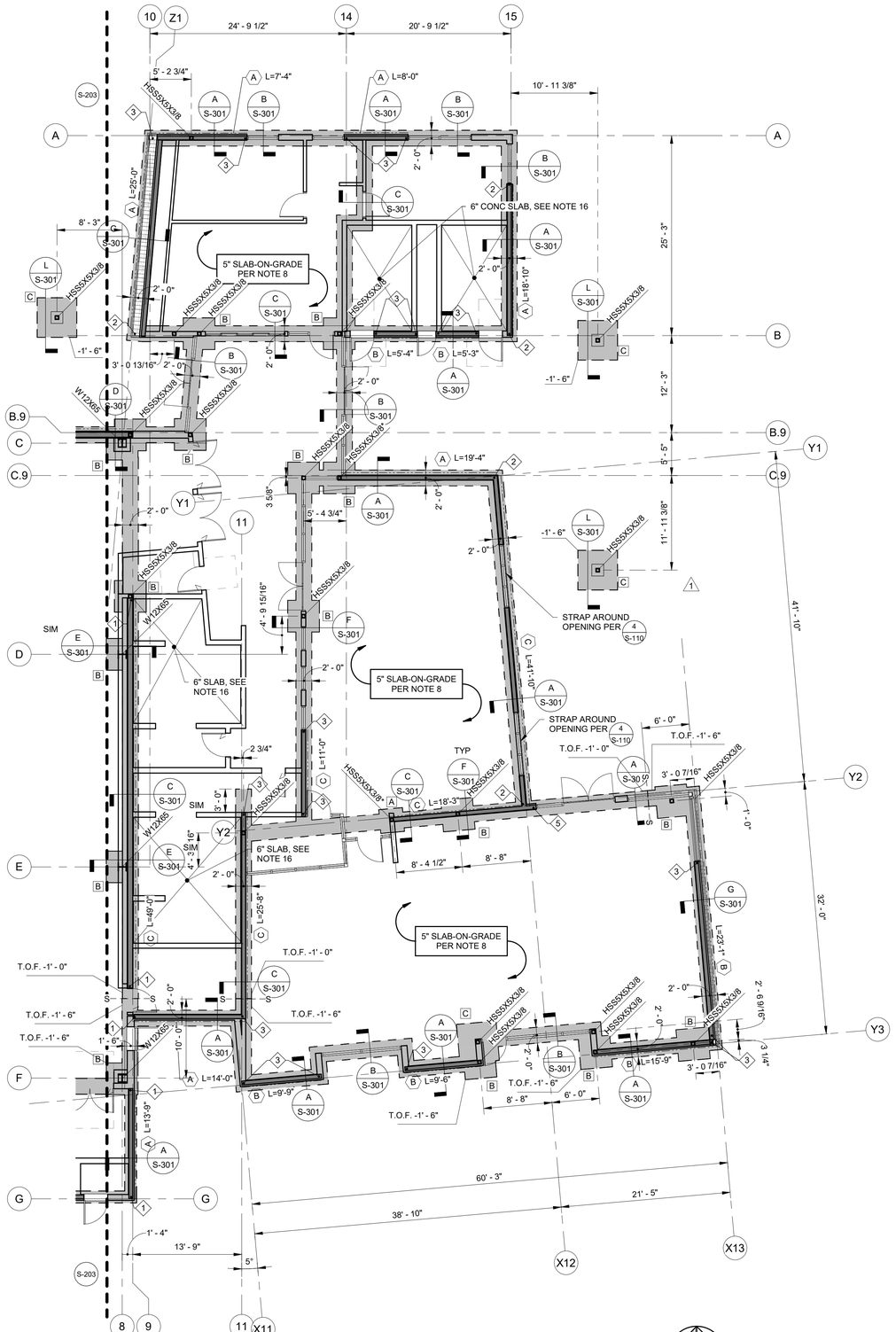

FOUNDATION PLAN NOTES:

1. REFER TO GENERAL NOTES & SPECIFICATIONS ON SHEET S-001 & S-002.
2. SEE SHEET S-101 THRU S-111 FOR TYPICAL DETAILS.
3. TOP OF SLAB & GROUND FLOOR REFERENCE ELEVATION = +[0' - 0"] TYP, U.N.O.
4. FOR DETAILED SOILS INFORMATION AND COMPLETE REQUIREMENTS, REFER TO SOILS REPORT.
5. SEE CIVIL DRAWINGS FOR BUILDING PAD PREPARATION, INCLUDING OVER EXCAVATION AND FILL REQUIREMENTS PER THE SOILS REPORT FOR DETAILED SOILS INFORMATION AND COMPLETE REQUIREMENTS, REFER TO SOILS REPORT.
6. CONTRACTOR TO VERIFY ALL DIMENSIONS AND ELEVATIONS SHOWN WITH ARCHITECTURAL DRAWINGS AND INFORM BOTH ARCHITECT AND ENGINEER OF ANY CONFLICTING INFORMATION.
7. THE SIZE & LOCATION OF ALL FOOTING AND SLAB PENETRATIONS SHALL BE SUBMITTED TO THE ENGINEER FOR REVIEW PRIOR TO INSTALLATION.
8. 5" THICK SLAB-ON-GRADE SECTION AS FOLLOWS: 5" THICK CONCRETE SLAB w/ #4 @ 18" O.C. EACH WAY AT 2" BELOW TOP OF SLAB. PLACE SLAB OVER SLAB MEMBRANE AND 6" OF 3/4" CRUSHED ROCK.
9. CONTROL JOINTS ARE TO BE INSTALLED @ 12'-6" O.C. MAX AS SHOWN ON S-204
10. CONCRETE CONTRACTOR IS RESPONSIBLE FOR THE PLACEMENT OF ALL EMBEDDED ITEMS.
11. ANCHOR BOLTS AND BASE PLATES SHALL NOT BE WET SET.
12. ALL DIMENSIONS ARE TO CENTERLINE OF COLUMNS OR FACE OF CONCRETE, TYPICAL UNLESS NOTED OTHERWISE.
13. TYPICAL STUDWALL CONSTRUCTION SHALL BE:
    2x6 STUDS @ 16" O.C., U.N.O.
    2x6 PT SILL PLATE, U.N.O. 5/8" Ø.
    AB @ 48" O.C. W/ 8" MIN EMBED BELOW TOP OF SLAB.
    THE OUTSIDE FACE OF EXTERIOR WALLS SHALL BE SHEATHED W/ 1/2" CDX PLYWOOD. EDGE NAILING SHALL BE 8d @ 6" O.C. AND FIELD NAILING SHALL BE 8d @ 12" O.C., U.N.O.
    SEE (1/S-106) FOR MAX STUDWALL HEIGHTS ON 2x6 SAWN, 2x6 LSL, 2x8 SAWN, & 2x8 LSL STUD WALLS.
    SEE WALL STUD KEY PLAN S-204 FOR NON TYPICAL WALL STUD SIZES
14. SEE ARCHITECTURAL DRAWINGS FOR CURB LOCATIONS..
15. ALL ISOLATED 4x & 6x POSTS SHALL BE SUPPORTED WITH SIMPSON ABU POST BASES W/ 5/8" Ø. x 8" EMBED ANCHOR BOLTS, U.N.O.
16. 6" THICK SLAB-ON-GRADE SECTION AS FOLLOWS: 6" THICK CONCRETE SLAB w/ #4 @ 18" O.C. EACH WAY AT 2" BELOW TOP OF SLAB. PLACE SLAB OVER SLAB MEMBRANE AND 6" OF 3/4" CRUSHED ROCK. SLOPE TO DRAIN PER ARCH, MIN 4" THICK SLAB AT DRAINS. USE 6" TALL x STUD WIDTH CONCRETE CURB AROUND ROOM PER (5/S-101)
17. (1/A101) INDICATES DETAIL/SECTION VIEW WITH VIEW DIRECTION ARROW, DETAIL NUMBER AND SHEET REFERENCE.
18. (1) INDICATES GRID
19. INDICATES FOOTING
20. INDICATES HSS HOLDOWN (4/S-111)
21. -[0'-2"] INDICATES DEPRESSED SLAB ELEVATION (5/S-101)
22. (A) INDICATES SHEARWALL CONSTRUCTION WITH NAILING TAG.
23. L = X' - X" INDICATES SHEAR WALL LENGTH. SEE SCHEDULE. (1/S-110)
24. INDICATES STUDWALL. SEE S-204
25. (1) INDICATES HOLDOWN TAG. SEE SCHEDULE. (1/S-111)
26. (A) INDICATES FOUNDATION TAG. SEE SCHEDULE.
27. -[1' - 0"] INDICATES TOP OF FOOTING EELVATION BELOW TOP OF SLAB. TOP OF FOOTING SHALL BE 1' - 0" BELOW TOP OF SLAB, UNO
28. S— — —S INDICATES FOOTING STEP PER (5/S-102)

FOOTING SCHEDULE				
TYPE	SIZE	REINFORCING		REMARKS
		LONGITUDINAL	TRANSVERSE	
A	3'-0" x 3'-0"	3 - #5	3 - #5	1, 3
B	4'-0" x 4'-0"	4 - #5	4 - #5	1, 3
C	5'-0" x 5'-0"	5 - #5	5 - #5	1, 3
D	5'-6" x 5'-6" x 2'-0"	6 - #7	6 - #7	3

NOTES:
1. RUN CONTINUOUS STEEL THROUGH FOOTING.
2. REINFORCING INDICATES BOTTOM MAT ONLY.
3. REINFORCING INDICATES TOP AND BOTTOM MAT.

rrm design group
rrmdesign.com | (805) 543-1794
3765 SOUTH HIGUERA STREET SUITE 102
SAN LUIS OBISPO, CA 93401

THE INCLUDED DRAWINGS, SPECIFICATIONS, IDEAS, DESIGNS AND ARRANGEMENTS REPRESENTED THEREBY ARE AND SHALL REMAIN THE PROPERTY OF RRM DESIGN GROUP AND NO PART THEREOF SHALL BE COPIED, DISCLOSED TO OTHERS OR SUBSTANTIALLY USED FOR ANY PURPOSE WHATSOEVER OTHER THAN THE PROJECT FOR WHICH THEY HAVE BEEN PREPARED AND DEVELOPED WITHOUT THE WRITTEN CONSENT OF RRM DESIGN GROUP. VISUAL CONTACT WITH THESE DRAWINGS OR SPECIFICATIONS SHALL CONSTITUTE CONCLUSIVE EVIDENCE OF ACCEPTANCE OF THESE RESTRICTIONS. SUBMITTAL OF PRELIMINARY DRAWINGS FOR REVIEW SHALL NOT BE CONSIDERED A WAIVER OF RRM DESIGN GROUP'S RIGHTS.
RRM DESIGN GROUP COPYRIGHT 2023
RRM IS A CALIFORNIA CORPORATION

REGISTERED PROFESSIONAL ENGINEER
AUSTIN G. LEE
No. S6623
EXP. 3/31/25
STRUCTURAL
STATE OF CALIFORNIA

CONSULTANT

CORNERSTONE
structural engineering group
986 W. Alluvial, Suite 201
Fresno, California 93711
559.320.3200
fax 559.320.3201

AGENCY

PORTERVILLE COMMUNITY CENTER
N 4TH ST, PORTERVILLE, CA 93257

FOUNDATION PLAN - SOUTH

NO.	REVISION	DATE
1	Plan Check Revision 1	5/17/24

PROJECT MANAGER
DRAWN BY | CHECKED BY
DATE 09.10.24
PROJECT NUMBER 2883-01-RC22
SHEET S-202

CONSTRUCTION DOCUMENTS

9/10/2024 2:25:06 PM
\\seg-fr-fs01\Homes$\markw\Porterville_2022_Structural_danderson@cseg.com.nt

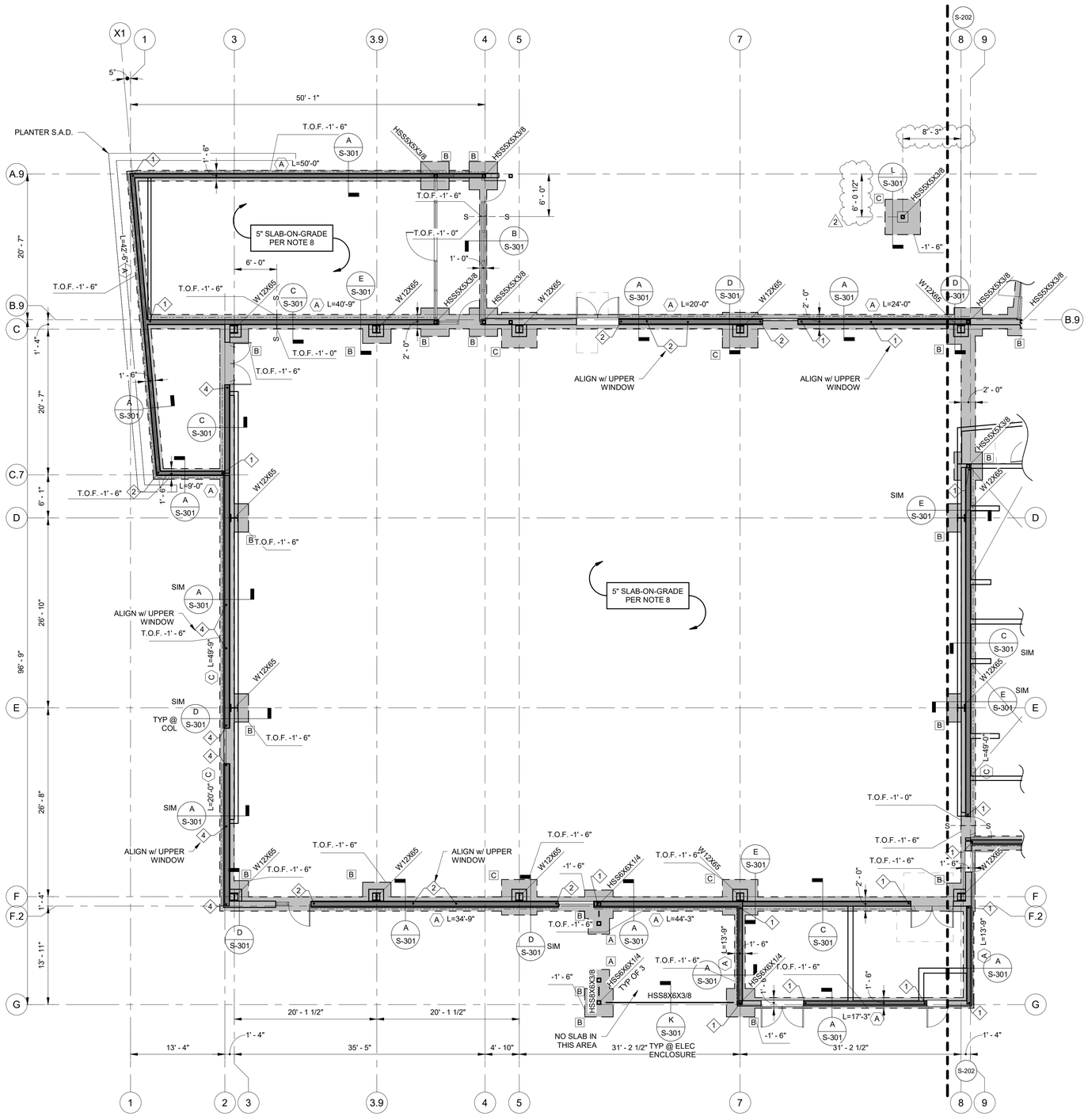

FOUNDATION PLAN - NORTH

1/8" = 1'-0"

FOUNDATION PLAN NOTES:

1. REFER TO GENERAL NOTES & SPECIFICATIONS ON SHEET S-001 & S-002.
2. SEE SHEET S-101 THRU S-111 FOR TYPICAL DETAILS.
3. TOP OF SLAB & GROUND FLOOR REFERENCE ELEVATION = +[0' - 0"] TYP, U.N.O.
4. FOR DETAILED SOILS INFORMATION AND COMPLETE REQUIREMENTS, REFER TO SOILS REPORT.
5. SEE CIVIL DRAWINGS FOR BUILDING PAD PREPARATION, INCLUDING OVER EXCAVATION AND FILL REQUIREMENTS PER THE SOILS REPORT FOR DETAILED SOILS INFORMATION AND COMPLETE REQUIREMENTS, REFER TO SOILS REPORT.
6. CONTRACTOR TO VERIFY ALL DIMENSIONS AND ELEVATIONS SHOWN WITH ARCHITECTURAL DRAWINGS AND INFORM BOTH ARCHITECT AND ENGINEER OF ANY CONFLICTING INFORMATION.
7. THE SIZE & LOCATION OF ALL FOOTING AND SLAB PENETRATIONS SHALL BE SUBMITTED TO THE ENGINEER FOR REVIEW PRIOR TO INSTALLATION.
8. 5" THICK SLAB-ON-GRADE SECTION AS FOLLOWS: 5" THICK CONCRETE SLAB w/ #4 @ 18" O.C. EACH WAY AT 2" BELOW TOP OF SLAB. PLACE SLAB OVER SLAB MEMBRANE AND 6" OF 3/4" CRUSHED ROCK.
9. CONTROL JOINTS ARE TO BE INSTALLED @ 12'-6" O.C. MAX AS SHOWN ON S-204
10. CONCRETE CONTRACTOR IS RESPONSIBLE FOR THE PLACEMENT OF ALL EMBEDDED ITEMS.
11. ANCHOR BOLTS AND BASE PLATES SHALL NOT BE WET SET.
12. ALL DIMENSIONS ARE TO CENTERLINE OF COLUMNS OR FACE OF CONCRETE, TYPICAL UNLESS NOTED OTHERWISE.
13. TYPICAL STUDWALL CONSTRUCTION SHALL BE:
    2x6 STUDS @ 16" O.C., U.N.O.
    2x6 PT SILL PLATE, U.N.O. 5/8" Ø.
    AB @ 48" O.C. W/ 8" MIN EMBED BELOW TOP OF SLAB.
    THE OUTSIDE FACE OF EXTERIOR WALLS SHALL BE SHEATHED W/ 1/2" CDX PLYWOOD. EDGE NAILING SHALL BE 8d @ 6" O.C. AND FIELD NAILING SHALL BE 8d @ 12" O.C., U.N.O.
    SEE (1/S-106) FOR MAX STUDWALL HEIGHTS ON 2x6 SAWN, 2x6 LSL, 2x8 SAWN, & 2x8 LSL STUD WALLS.
    SEE WALL STUD KEY PLAN S-204 FOR NON TYPICAL WALL STUD SIZES
14. SEE ARCHITECTURAL DRAWINGS FOR CURB LOCATIONS..
15. ALL ISOLATED 4x & 6x POSTS SHALL BE SUPPORTED WITH SIMPSON ABU POST BASES W/ 5/8" Ø. x 8" EMBED ANCHOR BOLTS, U.N.O.
16. 6" THICK SLAB-ON-GRADE SECTION AS FOLLOWS: 6" THICK CONCRETE SLAB w/ #4 @ 18" O.C. EACH WAY AT 2" BELOW TOP OF SLAB. PLACE SLAB OVER SLAB MEMBRANE AND 6" OF 3/4" CRUSHED ROCK. SLOPE TO DRAIN PER ARCH, MIN 4" THICK SLAB AT DRAINS. USE 6" TALL x STUD WIDTH CONCRETE CURB AROUND ROOM PER (5/S-101)
17. (1/A101) INDICATES DETAIL/SECTION VIEW WITH VIEW DIRECTION ARROW, DETAIL NUMBER AND SHEET REFERENCE.
18. (1) INDICATES GRID
19. INDICATES FOOTING
20. INDICATES HSS HOLDOWN (4/S-111)
21. -[0'-2"] INDICATES DEPRESSED SLAB ELEVATION (5/S-101)
22. (A) INDICATES SHEARWALL CONSTRUCTION WITH NAILING TAG.
23. L = X' - X" INDICATES SHEAR WALL LENGTH. SEE SCHEDULE. (1/S-110)
24. INDICATES STUDWALL. SEE S-204
25. (1) INDICATES HOLDOWN TAG. SEE SCHEDULE. (1/S-111)
26. [A] INDICATES FOUNDATION TAG. SEE SCHEDULE.
27. -[1' - 0"] INDICATES TOP OF FOOTING EELVATION BELOW TOP OF SLAB. TOP OF FOOTING SHALL BE 1' - 0" BELOW TOP OF SLAB, UNO
28. S— — —S INDICATES FOOTING STEP PER (5/S-102)

FOOTING SCHEDULE				
TYPE	SIZE	REINFORCING		REMARKS
		LONGITUDINAL	TRANSVERSE	
A	3'-0" x 3'-0"	3 - #5	3 - #5	1, 3
B	4'-0" x 4'-0"	4 - #5	4 - #5	1, 3
C	5'-0" x 5'-0"	5 - #5	5 - #5	1, 3
D	5'-6" x 5'-6" x 2'-0"	6 - #7	6 - #7	3

NOTES:
1. RUN CONTINUOUS STEEL THROUGH FOOTING.
2. REINFORCING INDICATES BOTTOM MAT ONLY.
3. REINFORCING INDICATES TOP AND BOTTOM MAT.

rrm design group
rrmdesign.com | (805) 543-1794
3765 SOUTH HIGUERA STREET SUITE 102
SAN LUIS OBISPO, CA 93401

THE INCLUDED DRAWINGS, SPECIFICATIONS, IDEAS, DESIGNS AND ARRANGEMENTS REPRESENTED THEREBY ARE AND SHALL REMAIN THE PROPERTY OF RRM DESIGN GROUP AND NO PART THEREOF SHALL BE COPIED, DISCLOSED TO OTHERS OR SUBSTANTIALLY USED FOR ANY PURPOSE WITHOUT THE WRITTEN CONSENT OF RRM DESIGN GROUP. THE PROJECT FOR WHICH THEY HAVE BEEN PREPARED AND DEVELOPED WITHOUT THE WRITTEN CONSENT OF RRM DESIGN GROUP. VISUAL CONTACT WITH THESE DRAWINGS OR SPECIFICATIONS SHALL CONSTITUTE CONCLUSIVE EVIDENCE OF ACCEPTANCE OF THESE RESTRICTIONS. SUBMITTAL OF PRELIMINARY DRAWINGS FOR REVIEW SHALL NOT BE CONSIDERED AS A WAIVER OF RRM DESIGN GROUP'S RIGHTS.
RRM DESIGN GROUP COPYRIGHT 2023
RRM IS A CALIFORNIA CORPORATION

REGISTERED PROFESSIONAL ENGINEER
JUSTIN G. LEE
No. S6623
EXP. 3/31/25
STRUCTURAL
STATE OF CALIFORNIA

CONSULTANT

CORNERSTONE structural engineering group
986 W. Alluvial, Suite 201
Fresno, California 93711
559.320.3200
fax 559.320.3201

AGENCY

PORTERVILLE COMMUNITY CENTER
N 4TH ST, PORTERVILLE, CA 93257

FOUNDATION PLAN - NORTH

NO.	REVISION	DATE
2	Plan Check Revision 2	9/9/24

PROJECT MANAGER
DRAWN BY | CHECKED BY
DATE 09.10.24
PROJECT NUMBER 2883-01-RC22
SHEET S-203

CONSTRUCTION DOCUMENTS

9/10/2024 2:25:07 PM
\\cseg-fs01\fhome$\markw\Porterville_2022_Structural_danderson@cseg.com.rvt

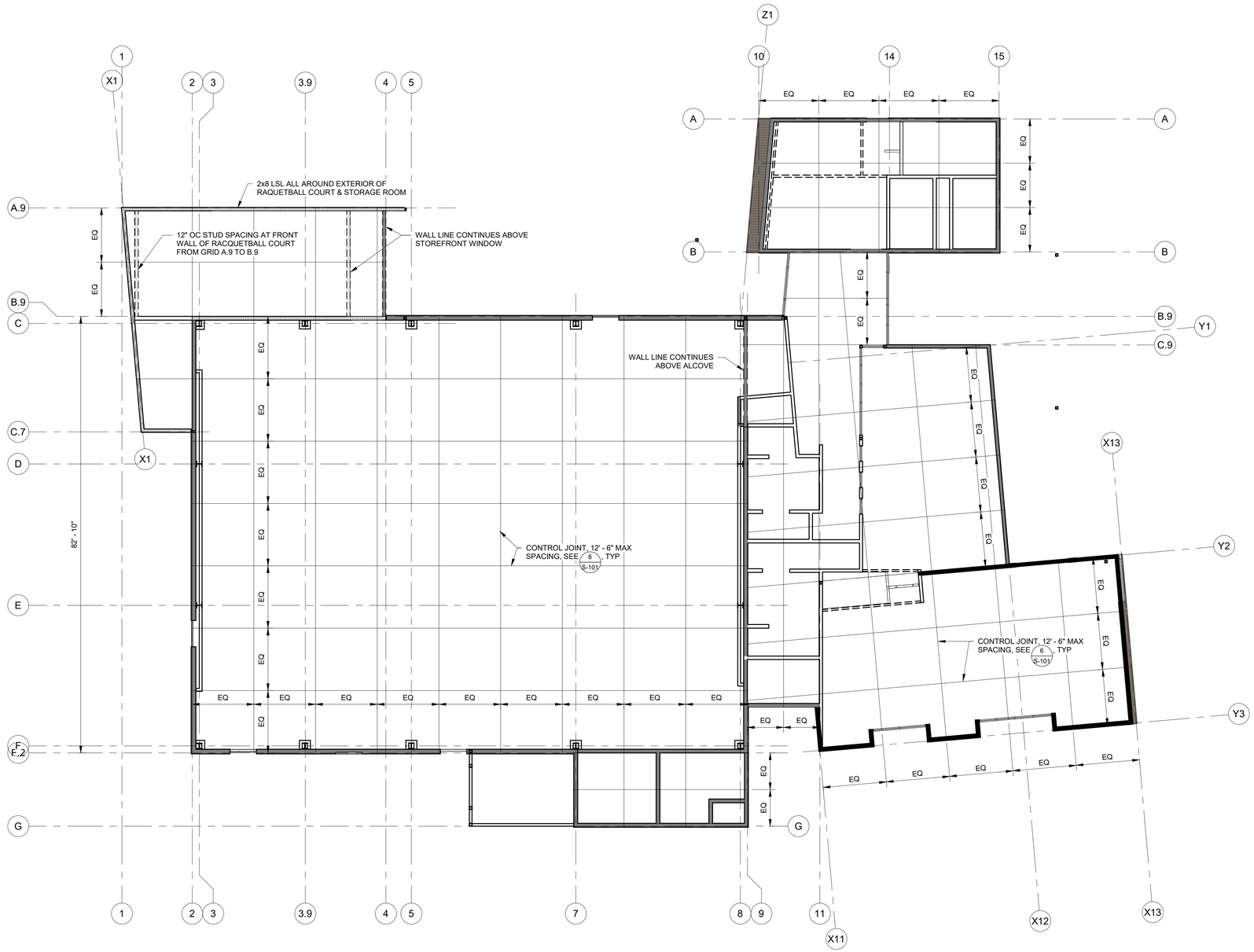

WALL STUD KEY PLAN & SLAB CONTROL JOINT LAYOUT

3/32" = 1'-0"

WALL STUD NOTES

INDICATES:
2x6 STUDS @ 16" O.C., U.N.O.
2x6 PT SILL PLATE, U.N.O.
5/8" Ø AB @ 48" O.C. W/ 8" MIN EMBED BELOW TOP OF SLAB.
THE OUTSIDE FACE OF EXTERIOR WALLS SHALL BE SHEATHED W/ 1/2" CDX PLYWOOD. EDGE NAILING SHALL BE 8d @ 6" O.C. AND FIELD NAILING SHALL BE 8d @ 12" O.C., U.N.O.

INDICATES:
2x8 STUDS @ 16" O.C., U.N.O.
2x8 PT SILL PLATE, U.N.O.
5/8" Ø AB @ 48" O.C. W/ 8" MIN EMBED BELOW TOP OF SLAB.
THE OUTSIDE FACE OF EXTERIOR WALLS SHALL BE SHEATHED W/ 1/2" CDX PLYWOOD. EDGE NAILING SHALL BE 8d @ 6" O.C. AND FIELD NAILING SHALL BE 8d @ 12" O.C., U.N.O.

INDICATES:
1.3E LSL 1.5"x5.5" STUDS @ 16" O.C., U.N.O.
1.3E LSL 1.5"x5.5" PT LSL SILL PLATE, U.N.O.
5/8" Ø AB @ 48" O.C. W/ 8" MIN EMBED BELOW TOP OF SLAB.
THE OUTSIDE FACE OF EXTERIOR WALLS SHALL BE SHEATHED W/ 1/2" CDX PLYWOOD. EDGE NAILING SHALL BE 8d @ 6" O.C. AND FIELD NAILING SHALL BE 8d @ 12" O.C., U.N.O.

INDICATES:
1.5E LSL 1.5"x7.25" STUDS @ 16" O.C., U.N.O.
1.5E LSL 1.5"x7.25" PT SILL PLATE, U.N.O.
5/8" Ø AB @ 48" O.C. W/ 8" MIN EMBED BELOW TOP OF SLAB.
THE OUTSIDE FACE OF EXTERIOR WALLS SHALL BE SHEATHED W/ 1/2" CDX PLYWOOD. EDGE NAILING SHALL BE 8d @ 6" O.C. AND FIELD NAILING SHALL BE 8d @ 12" O.C., U.N.O.

INDICATES:
2x10 STUDS @ 16" O.C., U.N.O.
2x10 PT SILL PLATE, U.N.O.
5/8" Ø AB @ 48" O.C. W/ 8" MIN EMBED BELOW TOP OF SLAB.
THE OUTSIDE FACE OF EXTERIOR WALLS SHALL BE SHEATHED W/ 1/2" CDX PLYWOOD. EDGE NAILING SHALL BE 8d @ 6" O.C. AND FIELD NAILING SHALL BE 8d @ 12" O.C., U.N.O.

rrm design group
rrmdesign.com | (805) 543-1794
3765 SOUTH HIGUERA STREET, SUITE 102
SAN LUIS OBISPO, CA 93401

THE INCLUDED DRAWINGS, SPECIFICATIONS, IDEAS, DESIGNS AND ARRANGEMENTS REPRESENTED THEREBY ARE AND SHALL REMAIN THE PROPERTY OF RRM DESIGN GROUP AND NO PART THEREOF SHALL BE COPIED, DISCLOSED TO OTHERS OR USED IN CONNECTION WITH ANY WORK OR PROJECT OTHER THAN THE SPECIFIED PROJECT FOR WHICH THEY HAVE BEEN PREPARED AND DEVELOPED WITHOUT THE WRITTEN CONSENT OF RRM DESIGN GROUP. VISUAL CONTACT WITH THESE DRAWINGS OR SPECIFICATIONS SHALL CONSTITUTE CONCLUSIVE EVIDENCE OF ACCEPTANCE OF THESE TERMS. INCLUDING, WITHOUT LIMITATION, THE TERMS RELATING TO ANY USE, REVISION, THEFT, REUSE OR CONVERSION OF A WORK OF RRM DESIGN GROUP'S REPORT.
RRM DESIGN GROUP COPYRIGHT 2023
RRM IS A CALIFORNIA CORPORATION

REGISTERED PROFESSIONAL ENGINEER
AUSTIN G. LEE
No. S6623
EXP. 3/31/25
STRUCTURAL
STATE OF CALIFORNIA

CONSULTANT

CORNERSTONE
structural engineering group
986 W. Alluvial, Suite 201
Fresno, California 93711
559.320.3200
fax 559.320.3201

AGENCY

PORTERVILLE COMMUNITY CENTER

N 4TH ST, PORTERVILLE, CA 93257

WALL STUD KEY PLAN

NO.	REVISION	DATE
1	Plan Check Revision 1	5/17/24

PROJECT MANAGER

DRAWN BY | CHECKED BY

DATE
09.10.24

PROJECT NUMBER
2883-01-RC22

SHEET
S-204
1

CONSTRUCTION DOCUMENTS

9/10/2024 2:25:07 PM
\\seg-fr-fs01\fr\homes$\markw\Porterville_2022_Structural_danderson@seg.com.rvt

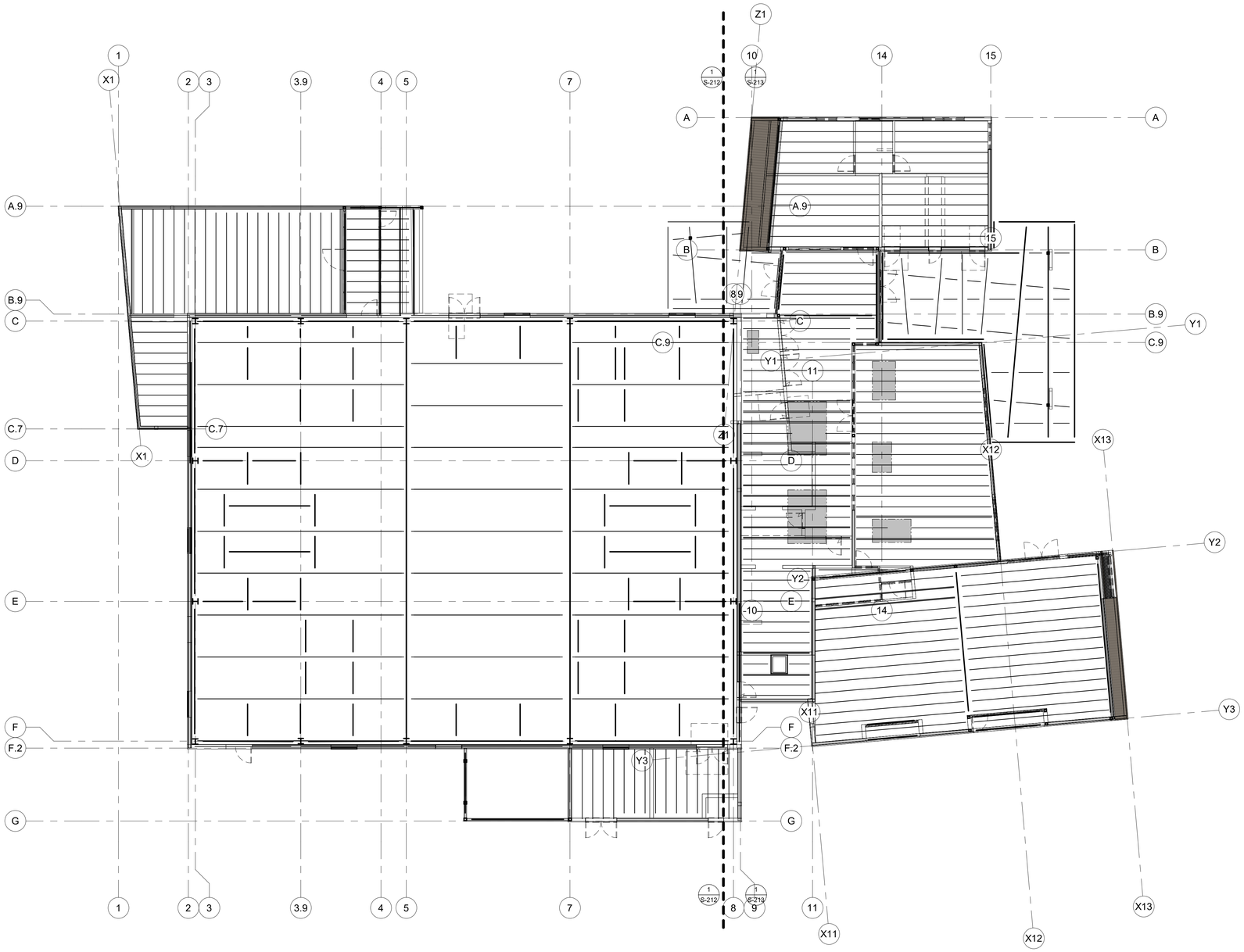

OVERALL ROOF FRAMING PLAN

3/32" = 1'-0"

rrm design group

rrmdesign.com | (805) 543-1794

3765 SOUTH HIGUERA STREET SUITE 102

SAN LUIS OBISPO, CA 93401

THE INCLUDED DRAWINGS, SPECIFICATIONS, IDEAS, DESIGNS AND ARRANGEMENTS REPRESENTED THEREBY ARE AND SHALL REMAIN THE PROPERTY OF RRM DESIGN GROUP AND NO PART THEREOF SHALL BE COPIED, DISCLOSED TO OTHERS OR USED IN CONNECTION WITH ANY WORK OR PROJECT OTHER THAN THE SPECIFIC PROJECT FOR WHICH THEY HAVE BEEN PREPARED AND DEVELOPED WITHOUT THE WRITTEN CONSENT OF RRM DESIGN GROUP. VISUAL CONTACT WITH THESE DRAWINGS OR SPECIFICATIONS SHALL CONSTITUTE CONCLUSIVE EVIDENCE OF ACCEPTANCE OF THESE RESTRICTIONS. SUBMITTAL OF PROPOSALS OR DELIVERY OF REPORTS, PLANS, DATA, ETC. TO OTHERS OR MAKING OF WRITTEN DISCLOSURES BY RRM DESIGN GROUP'S REVIEW

RRM DESIGN GROUP COPYRIGHT 2023

RRM IS A CALIFORNIA CORPORATION

REGISTERED PROFESSIONAL ENGINEER
JUSTIN G. LEE
No. S6623
EXP. 3/31/25
STRUCTURAL
STATE OF CALIFORNIA

CONSULTANT

CORNERSTONE structural engineering group

986 W. Alluvial, Suite 201
Fresno, California 93711
559.320.3200
fax 559.320.3201

AGENCY

PORTERVILLE COMMUNITY CENTER

N 4TH ST, PORTERVILLE, CA 93257

ROOF FRAMING PLAN

NO.	REVISION	DATE
△		
△		
△		
△		
△		
△		

PROJECT MANAGER

DRAWN BY | CHECKED BY

DATE
09.10.24

PROJECT NUMBER
2883-01-RC22

SHEET
S-211

CONSTRUCTION DOCUMENTS

9/10/2024 2:26:07 PM
\\seq-f-fs01\fhome$\markw\Porterville_2022_Structural_danderson@cseg.com.rvt

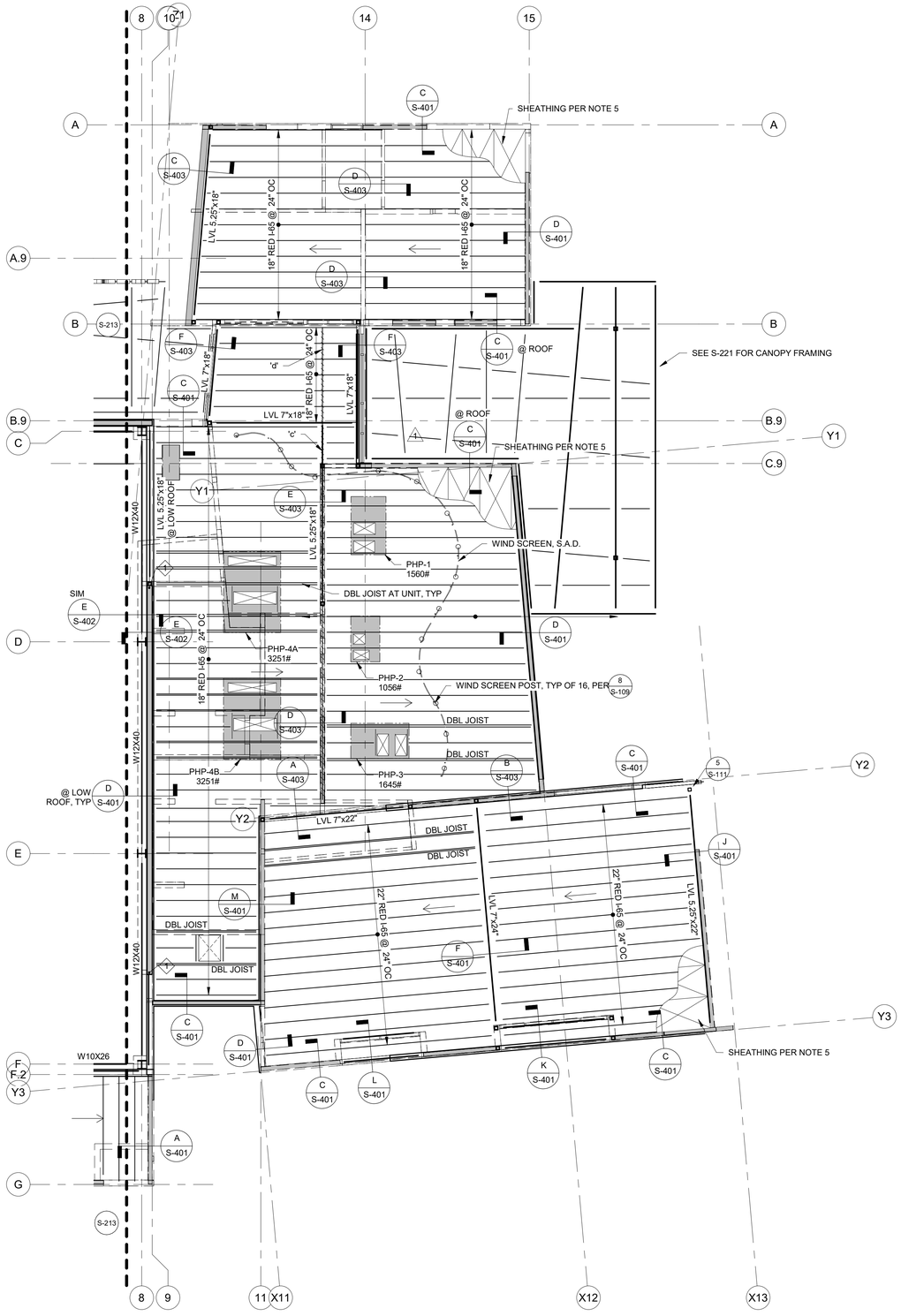

ROOF FRAMING PLAN - SOUTH

1/8" = 1'-0"

ROOF FRAMING NOTES:

1. REFER TO GENERAL NOTES & SPECIFICATIONS ON SHEET S-001 & S-002.
2. SEE SHEET S-101 - S-111 FOR TYPICAL FRAMING DETAILS.
3. SEE ARCHITECTURAL DRAWINGS FOR ROOF ELEVATIONS.
4. CONTRACTOR TO VERIFY ALL DIMENSIONS AND ELEVATIONS SHOWN WITH ARCHITECTURAL DRAWINGS AND INFORM BOTH ARCHITECT AND ENGINEER OF ANY CONFLICTING INFORMATION.
5. ROOF SHEATHING SHALL CONSIST OF 1/2" CDX PLYWOOD W/ 10d @ 4" O.C. AT BOUNDARIES AND EDGES, 10d @ 12" O.C. FIELD NAILING. ALL PLYWOOD EDGES SHALL BE FULLY BLOCKED TYPICAL, U.N.O.
6. ROOF DIAPHRAGM FASTENING SHALL BE APPROVED BY BUILDING DEPARTMENT PRIOR TO COVERING.
7. INSTALL EXTRA 2x6 AT RIDGE LOCATIONS WHERE NECESSARY.
8. SEE ARCHITECTURAL DRAWINGS FOR SIZE & LOCATION OF ROOF OPENINGS.
9. VERIFY SIZE AND LOCATION OF ALL OPENINGS WITH ARCHITECTURAL DRAWINGS AND MECHANICAL DRAWINGS. NOTIFY STRUCTURAL ENGINEER IMMEDIATELY OF ANY DISCREPANCIES, TYPICAL U.N.O.
10. FIRE SPRINKLER PIPING SHALL NOT BE SUPPORTED BY MEMBERS 6" OR LESS IN DEPTH. DESIGN OF THE ATTACHMENT TO THE SUPPORTING MEMBERS SHALL BE THE RESPONSIBILITY OF THE SPRINKLER INSTALLER.
11. THE SIZE, LOCATIONS AND ORIENTATIONS OF ALL MECHANICAL UNITS, CURBS, SLEEPERS AND OPENINGS SHALL BE VERIFIED WITH THE UNIT SUPPLIERS. ANY CONFLICTS SHALL BE BROUGHT TO THE ATTENTION OF THE ENGINEER IMMMEDIATELY.
12. ROOF JOISTS SHALL BE BRIDGED EVERY 10 FEET BY SOLID 2X BLOCKING OR BY 1x3 WOOD CROSS BRIDGING OR NAILED STEEL CROSS BRIDGING OF EQUAL STRENGTH.
13. ALL RAFTER TO BEAM/GIRDER CONNECTIONS SHALL BE W/ SIMPSON HU HANGERS, U.N.O.
14. CONTRACTOR TO USE SKEWED HANGERS IN LIEU OF HANGER SHOWN AS REQUIRED.
15. ALL 4x BEAM TO POST CONNECTIONS SHALL BE WITH EPC OR PC POST CAPS, U.N.O.
16. ALL 6x BEAM OR GL BEAM TO POST CONNECTIONS SHALL BE WITH ECC OR CC COLUMN CAPS, U.N.O. SEE 2/S-107
17. TYPICAL HSS COLUMN IN STUD WALL SHALL EXTEND UP TO BOTTOM OF WALL DBL TOP PLATE & SHALL BE ALIGNED WITH AN ADDITIONAL JOIST OR 2 BAYS OF BLKD, SEE 6/S-111
19. SEE ARCHITECTURAL DRAWINGS FOR SIZE & LOCATION OF DECK PENETRATIONS.
20. NO MECHANICAL EQUIPMENT, DUCTWORK, PIPING, ETC SHALL BE HUNG FROM STEEL DECKING UNLESS APPROVED BY THE STRUCTURAL ENGINEER.
21. SEE ARCHITECTURAL DRAWINGS FOR EDGE OF DECK LOCATIONS.

1/A101 — DETAIL/SECTION VIEW WITH VIEW DIRECTION ARROW, DETAIL NUMBER AND SHEET REFERENCE.

1 — GRID

INDICATES WALL BELOW

INDICATES SHEARWALL BELOW

SIMPSON STRAP. SEE PLAN.

INDICATES FRAMED DECK OPENING. MATCH JOIST SIZE FRAMING ALL AROUND WITH SIMPSON HU HANGERS EA END

INDICATES DIRECTION OF ROOF SLOPE. S.A.D.

INDICATES NEW MECHANICAL UNITS ABOVE ROOF. S.M.D. PROVIDE 3x6 BLKG AROUND PERIMETER OF UNIT AND OPENINGS FOR CURB ATTACHMENT WITH SIMPSON U HANGER EA END. SEE 4/S-107
600# INDICATES MAXIMUM UNIT WEIGHT.

INDICATES METAL DECK SEE SCHEDULE 3/S-105

1 — INDICATES HOLDOWN TAG. SEE 3/S-105

'c' — INDICATES CANTILEVER LVL BEAM OUT OVER COLUMN AND USE POST CAP PER 2/S-107

'd' — INDICATES SIMPSON CMSTC16x60' PER 8/S-107

'e' — INDICATES SIMPSON CS14x50' PER 8/S-107

rrm design group
rrmdesign.com | (805) 543-1794
3765 SOUTH HIGUERA STREET SUITE 102
SAN LUIS OBISPO, CA 93401
THE INCLUDED DRAWINGS, SPECIFICATIONS, IDEAS, DESIGNS AND ARRANGEMENTS REPRESENTED THEREBY ARE AND SHALL REMAIN THE PROPERTY OF RRM DESIGN GROUP AND NO PART THEREOF SHALL BE COPIED, DISCLOSED TO OTHERS OR SUBSTANTIALLY USED FOR ANY PURPOSE WITHOUT THE WRITTEN CONSENT OF AN OWNER OF THE PROJECT FOR WHICH THEY HAVE BEEN PREPARED AND DEVELOPED WITHOUT THE WRITTEN CONSENT OF RRM DESIGN GROUP. VISUAL CONTACT WITH THESE DRAWINGS OR SPECIFICATIONS SHALL CONSTITUTE CONCLUSIVE EVIDENCE OF ACCEPTANCE OF THESE RESTRICTIONS. SUBMITTAL OF PRELIMINARY DRAWINGS FOR REVIEW SHALL NOT BE CONSIDERED AS A WAIVER OF RRM DESIGN GROUP'S RIGHTS.
RRM DESIGN GROUP COPYRIGHT 2023
RRM IS A CALIFORNIA CORPORATION

REGISTERED PROFESSIONAL ENGINEER
AUSTIN G. LEE
No. S6623
EXP. 3/31/25
STRUCTURAL
STATE OF CALIFORNIA

CONSULTANT

CORNERSTONE
structural engineering group
986 W. Alluvial, Suite 201
Fresno, California 93711
559.320.3200
fax 559.320.3201

AGENCY

PORTERVILLE COMMUNITY CENTER
N 4TH ST, PORTERVILLE, CA 93257

ROOF FRAMING PLAN - SOUTH

NO.	REVISION	DATE
1	Plan Check Revision 1	5/17/24

PROJECT MANAGER
DRAWN BY | CHECKED BY
DATE 09.10.24
PROJECT NUMBER 2883-01-RC22
SHEET S-212

CONSTRUCTION DOCUMENTS

9/10/2024 2:25:08 PM
\\ceg-fr-fs01\fmome$\markw\Porterville_2022_Structural_danderson@ceg.com.rvt

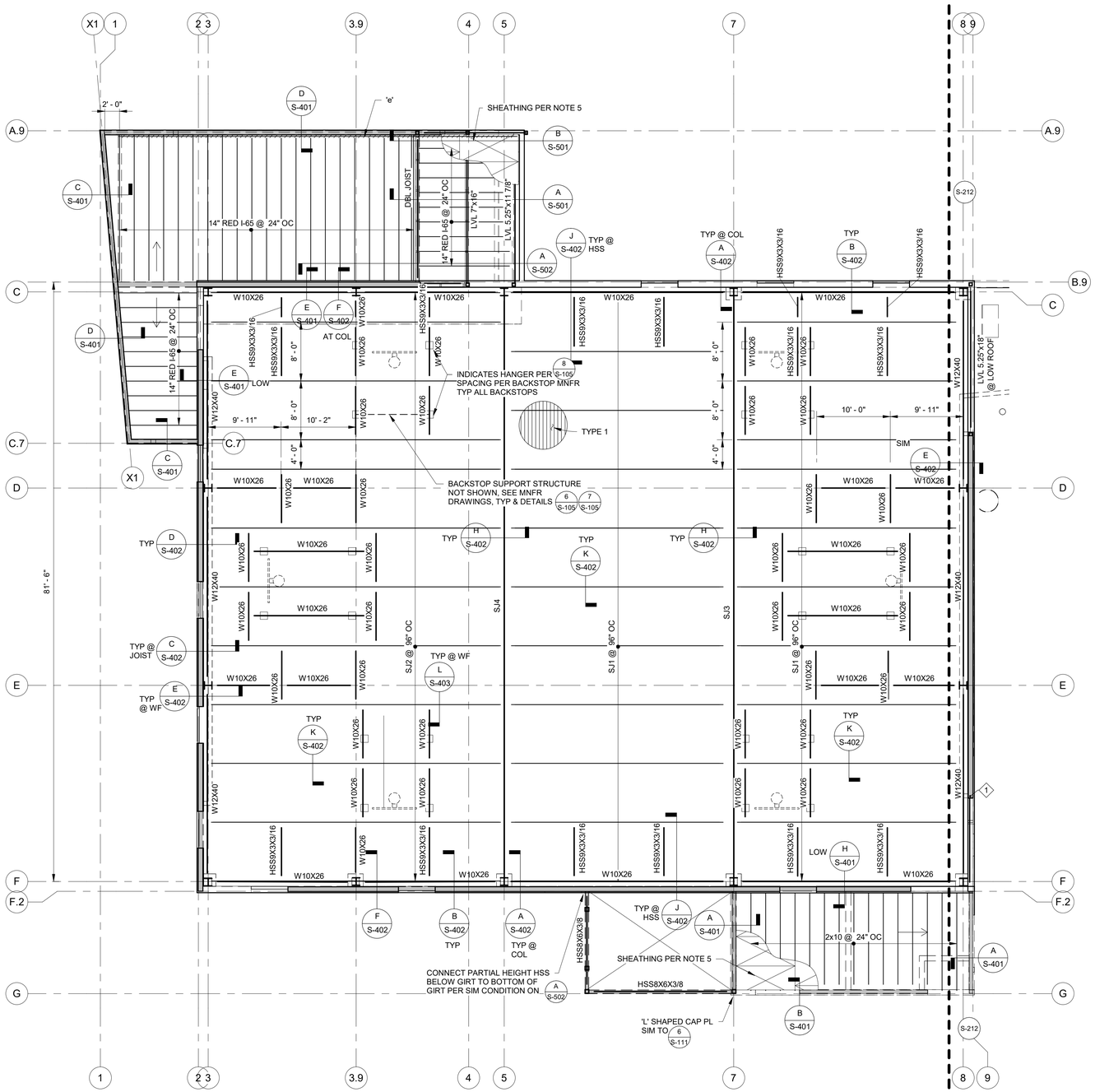

ROOF FRAMING PLAN - NORTH

1/8" = 1'-0"

ROOF FRAMING NOTES:

1. REFER TO GENERAL NOTES & SPECIFICATIONS ON SHEET S-001 & S-002.
2. SEE SHEET S-101 - S-111 FOR TYPICAL FRAMING DETAILS.
3. SEE ARCHITECTURAL DRAWINGS FOR ROOF ELEVATIONS.
4. CONTRACTOR TO VERIFY ALL DIMENSIONS AND ELEVATIONS SHOWN WITH ARCHITECTURAL DRAWINGS AND INFORM BOTH ARCHITECT AND ENGINEER OF ANY CONFLICTING INFORMATION.
5. ROOF SHEATHING SHALL CONSIST OF 1/2" CDX PLYWOOD W/ 10d @ 4" O.C. AT BOUNDARIES AND EDGES, 10d @ 12" O.C. FIELD NAILING. ALL PLYWOOD EDGES SHALL BE FULLY BLOCKED TYPICAL, U.N.O.
6. ROOF DIAPHRAGM FASTENING SHALL BE APPROVED BY BUILDING DEPARTMENT PRIOR TO COVERING.
7. INSTALL EXTRA 2x6 AT RIDGE LOCATIONS WHERE NECESSARY.
8. SEE ARCHITECTURAL DRAWINGS FOR SIZE & LOCATION OF ROOF OPENINGS.
9. VERIFY SIZE AND LOCATION OF ALL OPENINGS WITH ARCHITECTURAL DRAWINGS AND MECHANICAL DRAWINGS. NOTIFY STRUCTURAL ENGINEER IMMEDIATELY OF ANY DISCREPANCIES, TYPICAL U.N.O.
10. FIRE SPRINKLER PIPING SHALL NOT BE SUPPORTED BY MEMBERS 6" OR LESS IN DEPTH. DESIGN OF THE ATTACHMENT TO THE SUPPORTING MEMBERS SHALL BE THE RESPONSIBILITY OF THE SPRINKLER INSTALLER.
11. THE SIZE, LOCATIONS AND ORIENTATIONS OF ALL MECHANICAL UNITS, CURBS, SLEEPERS AND OPENINGS SHALL BE VERIFIED WITH THE UNIT SUPPLIERS. ANY CONFLICTS SHALL BE BROUGHT TO THE ATTENTION OF THE ENGINEER IMMMEDIATELY.
12. ROOF JOISTS SHALL BE BRIDGED EVERY 10 FEET BY SOLID 2X BLOCKING OR BY 1x3 WOOD CROSS BRIDGING OR NAILED STEEL CROSS BRIDGING OF EQUAL STRENGTH.
13. ALL RAFTER TO BEAM/GIRDER CONNECTIONS SHALL BE W/ SIMPSON HU HANGERS, U.N.O.
14. CONTRACTOR TO USE SKEWED HANGERS IN LIEU OF HANGER SHOWN AS REQUIRED.
15. ALL 4x BEAM TO POST CONNECTIONS SHALL BE WITH EPC OR PC POST CAPS, U.N.O.
16. ALL 6x BEAM OR GL BEAM TO POST CONNECTIONS SHALL BE WITH ECC OR CC COLUMN CAPS, U.N.O. SEE (2/S-107)
17. TYPICAL HSS COLUMN IN STUD WALL SHALL EXTEND UP TO BOTTOM OF WALL DBL TOP PLATE & SHALL BE ALIGNED WITH AN ADDITIONAL JOIST OR 2 BAYS OF BLKD, SEE (6/S-111)
19. SEE ARCHITECTURAL DRAWINGS FOR SIZE & LOCATION OF DECK PENETRATIONS.
20. NO MECHANICAL EQUIPMENT, DUCTWORK, PIPING, ETC SHALL BE HUNG FROM STEEL DECKING UNLESS APPROVED BY THE STRUCTURAL ENGINEER.
21. SEE ARCHITECTURAL DRAWINGS FOR EDGE OF DECK LOCATIONS.

(1/A101) DETAIL/SECTION VIEW WITH VIEW DIRECTION ARROW, DETAIL NUMBER AND SHEET REFERENCE.

(1) GRID

INDICATES WALL BELOW

INDICATES SHEARWALL BELOW

SIMPSON STRAP. SEE PLAN.

INDICATES FRAMED DECK OPENING. MATCH JOIST SIZE FRAMING ALL AROUND WITH SIMPSON HU HANGERS EA END

INDICATES DIRECTION OF ROOF SLOPE. S.A.D.

INDICATES NEW MECHANICAL UNITS ABOVE ROOF, S.M.D. PROVIDE 3x6 BLKG AROUND PERIMETER OF UNIT AND OPENINGS FOR CURB ATTACHMENT WITH SIMPSON U HANGER EA END. SEE (4/S-107)
600# INDICATES MAXIMUM UNIT WEIGHT.

INDICATES METAL DECK SEE SCHEDULE (3/S-105)

(1) INDICATES HOLDOWN TAG. SEE (3/S-105)

'c' INDICATES CANTILEVER LVL BEAM OUT OVER COLUMN AND USE POST CAP PER (2/S-107)

'd' INDICATES SIMPSON CMSTC16x60' PER (8/S-107)

'e' INDICATES SIMPSON CS14x50' PER (8/S-107)

rrm design group
rrmdesign.com | (805) 543-1794
3765 SOUTH HIGUERA STREET SUITE 102
SAN LUIS OBISPO, CA 93401

THE INCLUDED DRAWINGS, SPECIFICATIONS, IDEAS, DESIGNS AND ARRANGEMENTS REPRESENTED THEREBY ARE AND SHALL REMAIN THE PROPERTY OF RRM DESIGN GROUP AND NO PART THEREOF SHALL BE COPIED, DISCLOSED TO OTHERS OR USED IN CONNECTION WITH ANY WORK OR PROJECT OTHER THAN THE SPECIFIED PROJECT FOR WHICH THEY HAVE BEEN PREPARED AND DEVELOPED WITHOUT THE WRITTEN CONSENT OF RRM DESIGN GROUP. VISUAL CONTACT WITH THESE DRAWINGS OR SPECIFICATIONS SHALL CONSTITUTE CONCLUSIVE EVIDENCE OF ACCEPTANCE OF THESE RESTRICTIONS. SUBMITTAL OF PRELIMINARY DRAWINGS FOR REVIEW SHALL NOT BE CONSTRUED AS A WAIVER OF RRM DESIGN GROUP'S RIGHTS.
RRM DESIGN GROUP COPYRIGHT 2023
RRM IS A CALIFORNIA CORPORATION

REGISTERED PROFESSIONAL ENGINEER
JUSTIN G. LEE
No. S6623
EXP. 3/31/25
STRUCTURAL
STATE OF CALIFORNIA

CONSULTANT

CORNERSTONE structural engineering group
986 W. Alluvial, Suite 201
Fresno, California 93711
559.320.3200
fax 559.320.3201

AGENCY

PORTERVILLE COMMUNITY CENTER

N 4TH ST, PORTERVILLE, CA 93257

ROOF FRAMING PLAN - NORTH

NO.	REVISION	DATE

PROJECT MANAGER

DRAWN BY | CHECKED BY

DATE 09.10.24

PROJECT NUMBER 2883-01-RC22

SHEET S-213

CONSTRUCTION DOCUMENTS

9/10/2024 2:25:09 PM
\\cseg-fs01\Homes$\markw\Porterville_2022_Stuctural_danderson@cseg.com.rvt

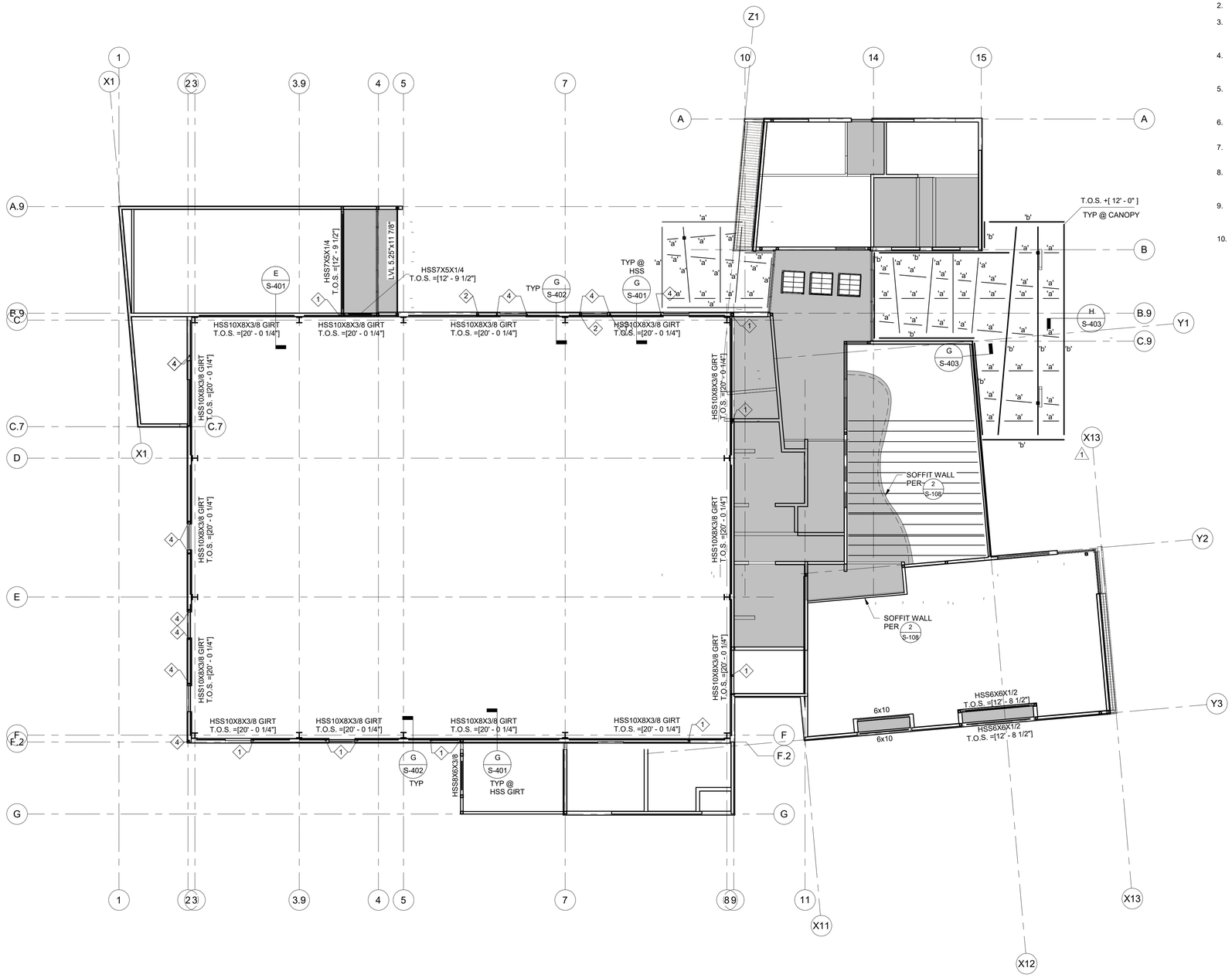

CEILING & LOW FRAMING PLAN

3/32" = 1'-0"

CEILING FRAMING NOTES:

1. REFER TO GENERAL NOTES & SPECIFICATIONS ON SHEET S0.01 & S0.02.
2. SEE SHEET S1.01-S1.11 FOR TYPICAL DETAILS.
3. AT CEILING FRAMING, PROVIDE GYPSUM BOARD (THICKNESS PER ARCH, 1/2" MIN, 1 1/4" MAX), W/ #6 SELF DRILLING DRYWALL SCREWS @ 7" OC EDGE FASTENING & 12" OC FIELD FASTENING IN COMPLIANCE WITH CBC SECTION 2508.6
4. AT NON SHEARWALLS SUPPORTING CEILING FRAMING, PROVIDE GYPSUM BOARD FULL HEIGHT (THICKNESS PER ARCH, 1/2" MIN), W/ #6 SELF DRILLING DRYWALL SCREWS @ 7" OC EDGE FASTENING & 12" OC FIELD FASTENING
5. CONTRACTOR TO VERIFY ALL DIMENSIONS AND ELEVATIONS SHOWN WITH ARCHITECTURAL DRAWINGS AND INFORM BOTH ARCHITECT AND ENGINEER OF ANY CONFLICTING INFORMATION.
6. NO PENETRATIONS FOR PIPING, CONDUIT, OR DUCTWORK SHALL BE MADE THRU THE JOISTS UNLESS APPROVED BY THE ENGINEER.
7. ALL DIMENSIONS ARE TO FACE OF WALL, UNLESS NOTED OTHERWISE.
8. INDICATES CEILING JOISTS PER 1/S-108
9. 'a' INDICATES HSS8x3x1/4
10. 'b' INDICATES HSS8x3x1/2

rrm design group

rrmdesign.com | (805) 543-1794

3765 SOUTH HIGUERA STREET, SUITE 102

SAN LUIS OBISPO, CA 93401

THE INCLUDED DRAWINGS, SPECIFICATIONS, IDEAS, DESIGNS AND ARRANGEMENTS REPRESENTED THEREBY ARE AND SHALL REMAIN THE PROPERTY OF RRM DESIGN GROUP AND NO PART THEREOF SHALL BE COPIED, DISCLOSED TO OTHERS OR USED IN CONNECTION WITH ANY WORK OR PROJECT OTHER THAN THE SPECIFIED PROJECT FOR WHICH THEY HAVE BEEN PREPARED AND DEVELOPED WITHOUT THE WRITTEN CONSENT OF RRM DESIGN GROUP. VISUAL CONTACT WITH THESE DRAWINGS OR SPECIFICATIONS SHALL CONSTITUTE CONCLUSIVE EVIDENCE OF ACCEPTANCE OF THESE RESTRICTIONS. SUBMITTAL OF THESE DOCUMENTS FOR PUBLIC AGENCY REVIEW SHALL NOT BE CONSIDERED A WAIVER OF RRM DESIGN GROUP'S RIGHTS.

RRM DESIGN GROUP COPYRIGHT 2023

RRM IS A CALIFORNIA CORPORATION

REGISTERED PROFESSIONAL ENGINEER
JUSTIN G. LEE
No. S6623
EXP. 3/31/25
STRUCTURAL
STATE OF CALIFORNIA

CONSULTANT

CORNERSTONE structural engineering group

986 W. Alluvial, Suite 201
Fresno, California 93711
559.320.3200
fax 559.320.3201

AGENCY

PORTERVILLE COMMUNITY CENTER

N 4TH ST, PORTERVILLE, CA 93257

CEILING & TRELLIS FRAMING PLAN

NO.	REVISION	DATE
1	Plan Check Revision 1	5/17/24

PROJECT MANAGER

DRAWN BY | CHECKED BY

DATE 09.10.24

PROJECT NUMBER 2883-01-RC22

SHEET S-221

CONSTRUCTION DOCUMENTS

9/10/2024 2:25:10 PM
\\cseg-fr-fs01\fhome$\markw\Porterville_2022_Structural_danderson@cseg.com.rvt

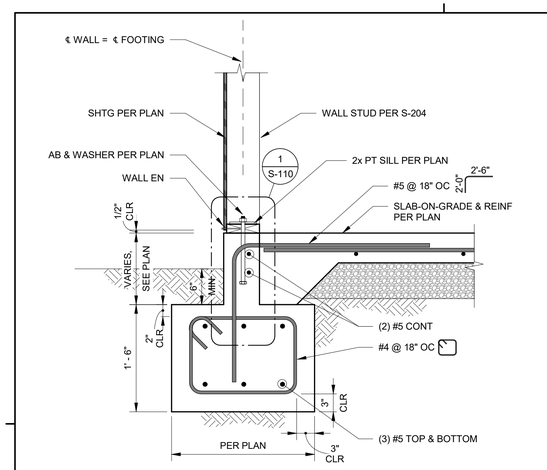

SECTION A S-301
1" = 1'-0"

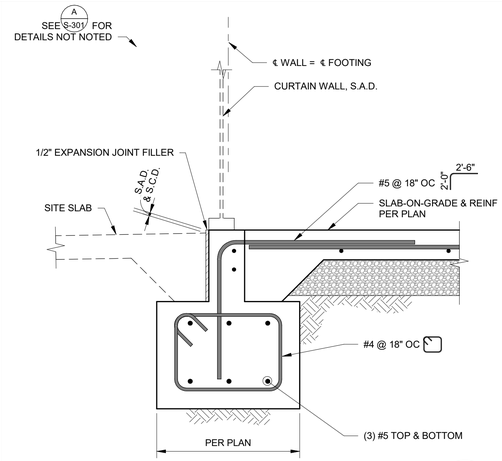

SECTION B S-301
1" = 1'-0"

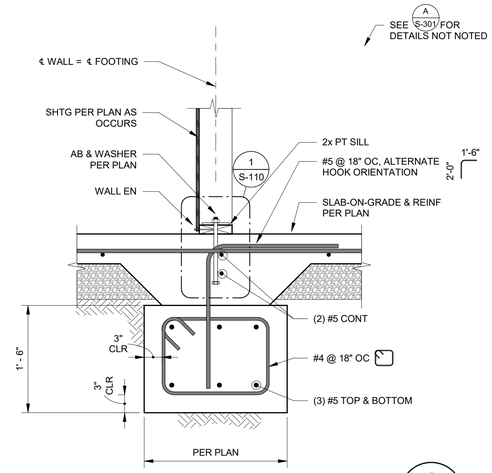

DETAIL C S-301
1" = 1'-0"

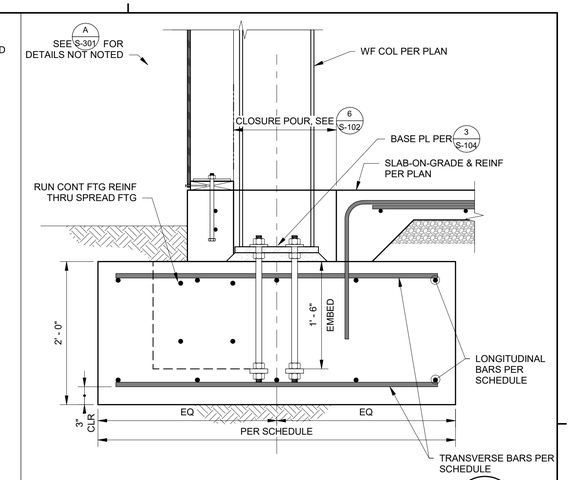

SECTION D S-301
1" = 1'-0"

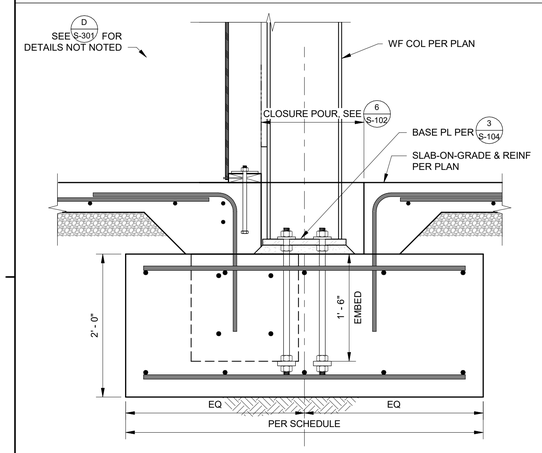

SECTION E S-301
1" = 1'-0"

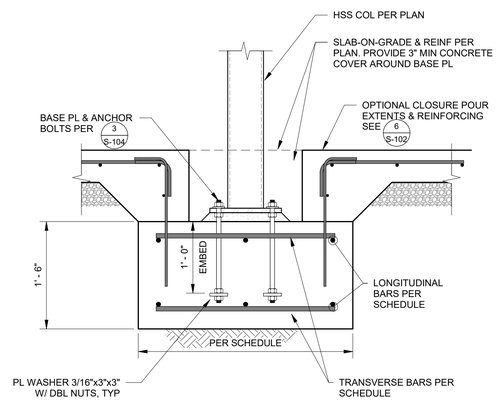

SECTION F S-301
1" = 1'-0"

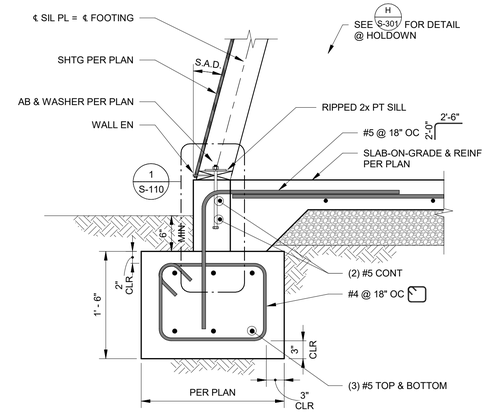

SECTION G S-301
NO SCALE

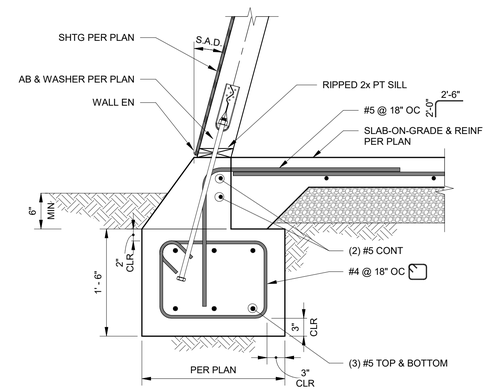

SECTION H S-301
NO SCALE

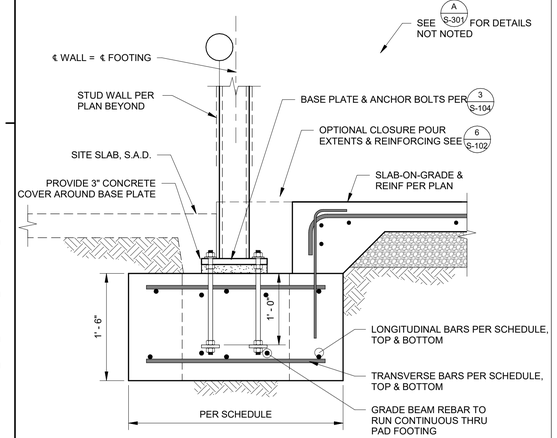

SECTION J S-301
1" = 1'-0"

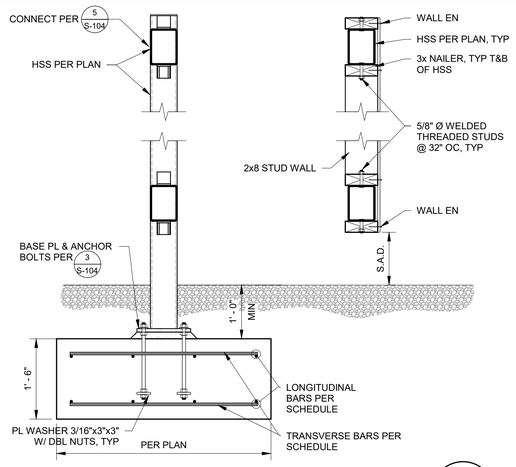

SECTION K S-301
3/4" = 1'-0"

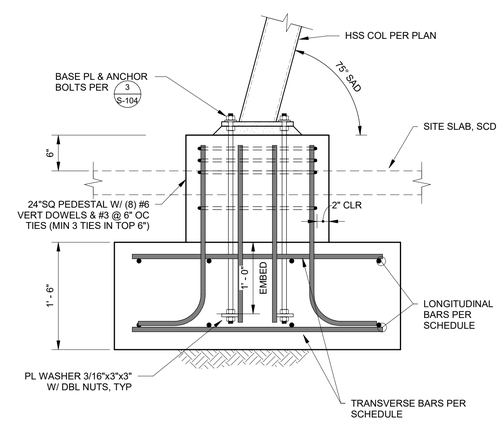

SECTION L S-301
1" = 1'-0"

rrm design group
rrmdesign.com | (805) 543-1794
3765 SOUTH HIGUERA STREET, SUITE 102
SAN LUIS OBISPO, CA 93401

THE INCLUDED DRAWINGS, SPECIFICATIONS, IDEAS, DESIGNS AND ARRANGEMENTS REPRESENTED THEREBY ARE AND SHALL REMAIN THE PROPERTY OF RRM DESIGN GROUP AND NO PART THEREOF SHALL BE COPIED, DISCLOSED TO OTHERS OR SUBSTANTIALLY USED FOR ANY PURPOSE WHATSOEVER EXCEPT FOR THE PROJECT FOR WHICH THEY HAVE BEEN PREPARED AND DEVELOPED WITHOUT THE WRITTEN CONSENT OF RRM DESIGN GROUP. VISUAL CONTACT WITH THESE DRAWINGS OR SPECIFICATIONS SHALL CONSTITUTE CONCLUSIVE EVIDENCE OF ACCEPTANCE OF THESE RESTRICTIONS. SUBMITTAL OF PRELIMINARY DRAWINGS FOR REVIEW SHALL NOT BE CONSTRUED AS A WAIVER OF RRM DESIGN GROUP'S RIGHTS.
RRM DESIGN GROUP COPYRIGHT 2023
RRM IS A CALIFORNIA CORPORATION

REGISTERED PROFESSIONAL ENGINEER
AUSTIN G. LEE
No. S6623
EXP. 3/31/25
STRUCTURAL
STATE OF CALIFORNIA

CONSULTANT

CORNERSTONE structural engineering group
986 W. Alluvial, Suite 201
Fresno, California 93711
559.320.3200
fax 559.320.3201

AGENCY

PORTERVILLE COMMUNITY CENTER
N 4TH ST, PORTERVILLE, CA 93257

FOUNDATION DETAILS No. 1

NO.	REVISION	DATE

PROJECT MANAGER
DRAWN BY | CHECKED BY
DATE 09.10.24
PROJECT NUMBER 2883-01-RC22
SHEET S-301

CONSTRUCTION DOCUMENTS

9/10/2024 2:25:10 PM
\\cseg-fr-fs01\fhome$\markw\Porterville_2022_Structural_danderson@cseg.com.rvt

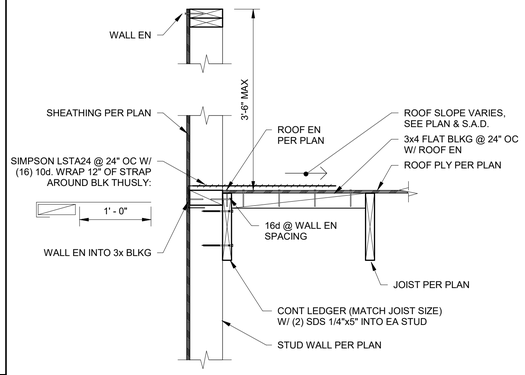

SECTION A / S-401
1" = 1'-0"

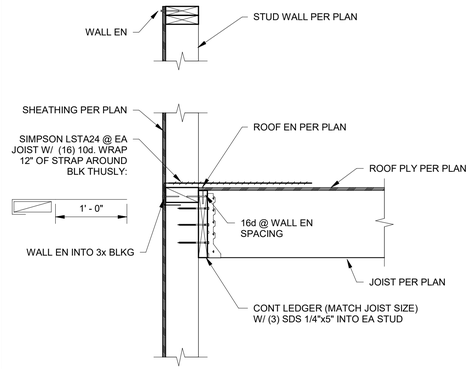

SECTION B / S-401
1" = 1'-0"

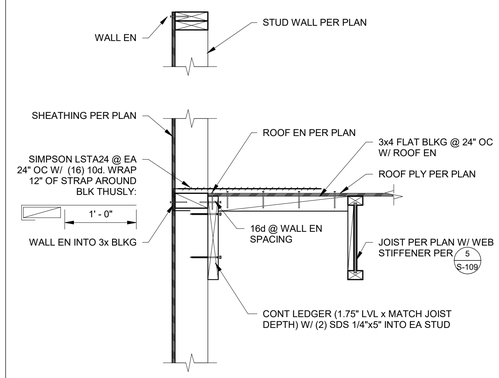

SECTION C / S-401
1" = 1'-0"

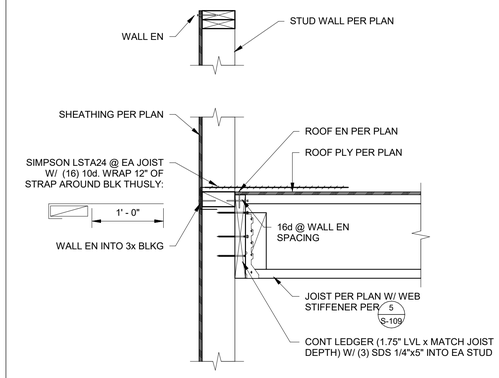

SECTION D / S-401
1" = 1'-0"

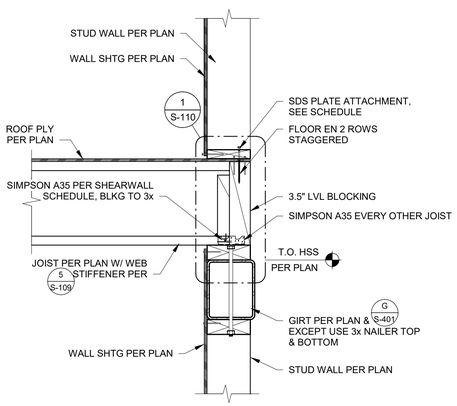

SECTION E / S-401
1" = 1'-0"

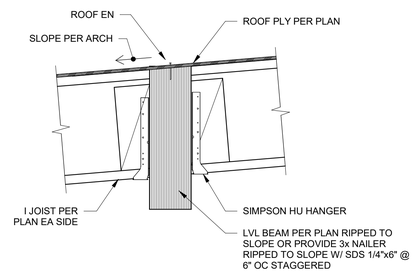

SECTION F / S-401
1" = 1'-0"

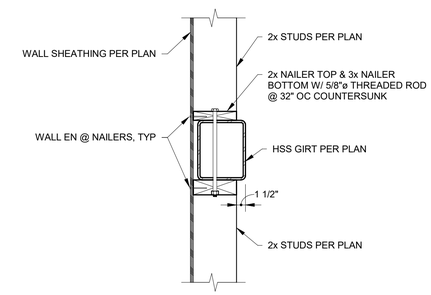

SECTION G / S-401
1" = 1'-0"

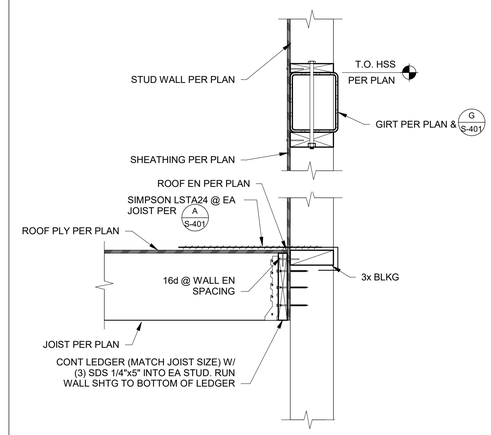

SECTION H / S-401
1" = 1'-0"

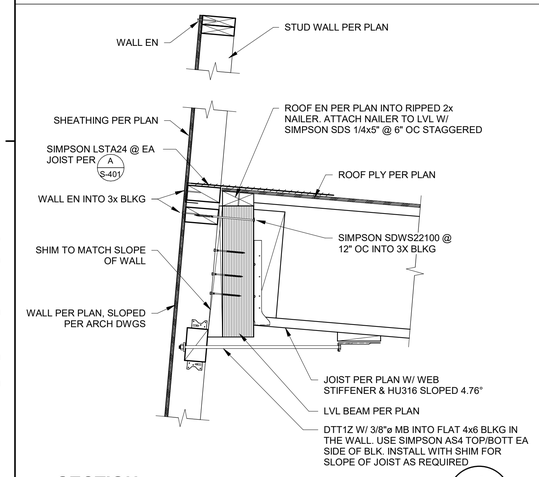

SECTION J / S-401
1" = 1'-0"

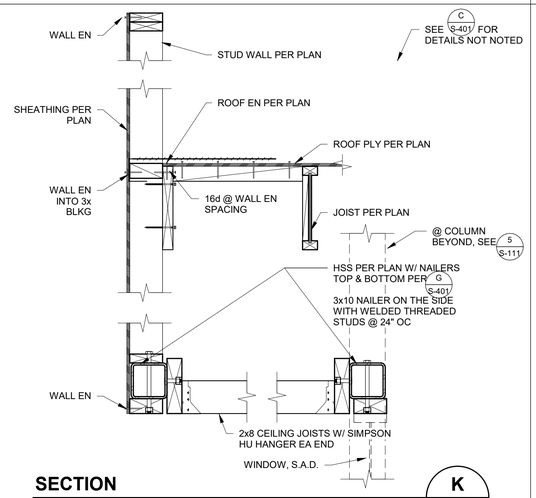

SECTION K / S-401
1" = 1'-0"

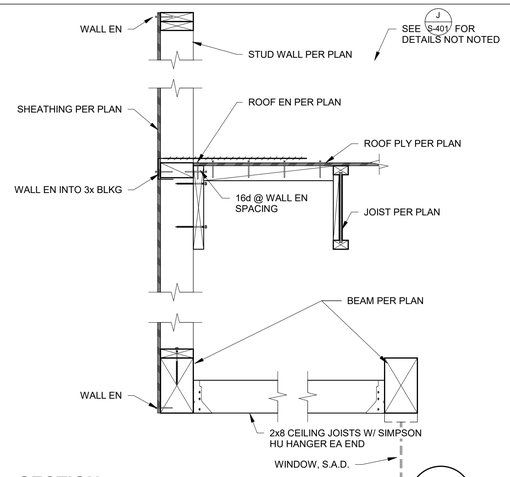

SECTION L / S-401
1" = 1'-0"

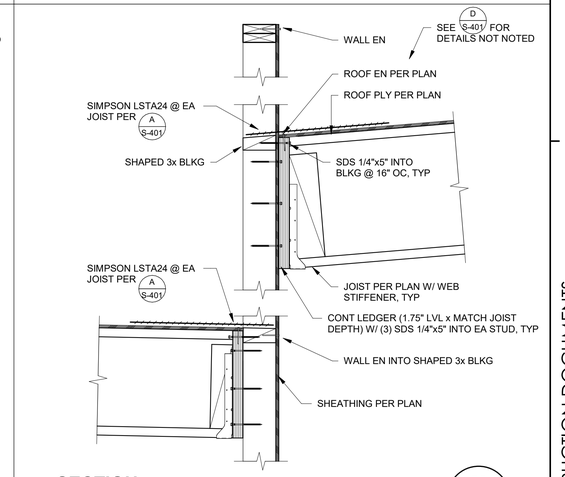

SECTION M / S-401
1" = 1'-0"

rrm design group
rrmdesign.com | (805) 543-1794
3765 SOUTH HIGUERA STREET, SUITE 102
SAN LUIS OBISPO, CA 93401

THE INCLUDED DRAWINGS, SPECIFICATIONS, IDEAS, DESIGNS AND ARRANGEMENTS REPRESENTED THEREBY ARE AND SHALL REMAIN THE PROPERTY OF RRM DESIGN GROUP AND NO PART THEREOF SHALL BE COPIED, DISCLOSED TO OTHERS OR SUBSTANTIALLY USED FOR ANY PURPOSE WITHOUT THE PROMPT WRITTEN CONSENT OF THE PROJECT FOR WHICH THEY HAVE BEEN PREPARED AND DEVELOPED WITHOUT THE WRITTEN CONSENT OF RRM DESIGN GROUP. VISUAL CONTACT WITH THESE DRAWINGS OR SPECIFICATIONS SHALL CONSTITUTE CONCLUSIVE EVIDENCE OF ACCEPTANCE OF THESE RESTRICTIONS. SUBMITTAL OF PRELIMINARY DRAWINGS FOR REVIEW SHALL NOT BE CONSIDERED A WAIVER OF THE RRM DESIGN GROUP'S RIGHTS.
RRM DESIGN GROUP COPYRIGHT 2023
RRM IS A CALIFORNIA CORPORATION

REGISTERED PROFESSIONAL ENGINEER
JUSTIN G. LEE
No. S6623
EXP. 3/31/25
STRUCTURAL
STATE OF CALIFORNIA

CONSULTANT

CORNERSTONE structural engineering group
986 W. Alluvial, Suite 201
Fresno, California 93711
559.320.3200
fax 559.320.3201

AGENCY

PORTERVILLE COMMUNITY CENTER
N 4TH ST, PORTERVILLE, CA 93257

ROOF FRAMING DETAILS No. 1

NO.	REVISION	DATE

PROJECT MANAGER
DRAWN BY | CHECKED BY
DATE 09.10.24
PROJECT NUMBER 2883-01-RC22
SHEET S-401

CONSTRUCTION DOCUMENTS

9/10/2024 2:25:11 PM
\\ceg-fr-fs01\Homes$\markw\Porterville_2022_Structural_danderson@ceg.com.rvt

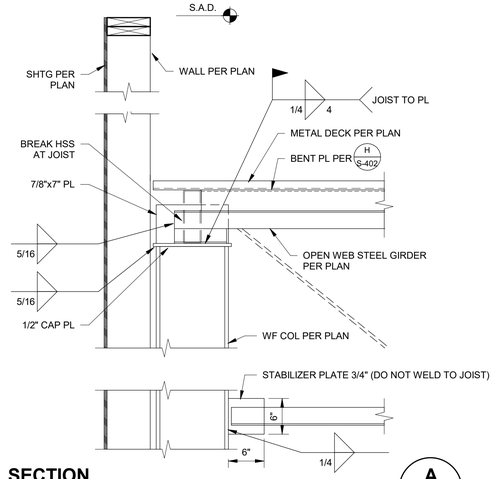

SECTION A S-402
1" = 1'-0"

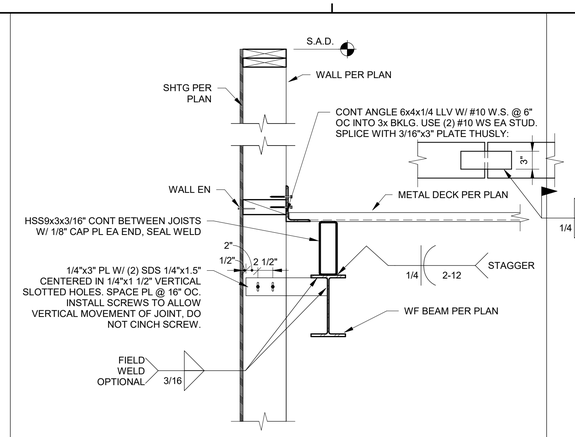

SECTION B S-402
1" = 1'-0"

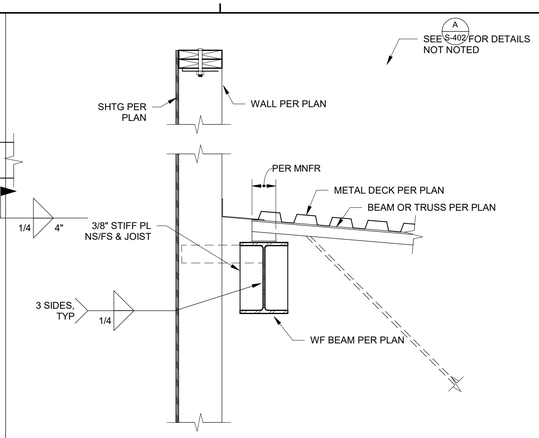

SECTION C S-402
1" = 1'-0"

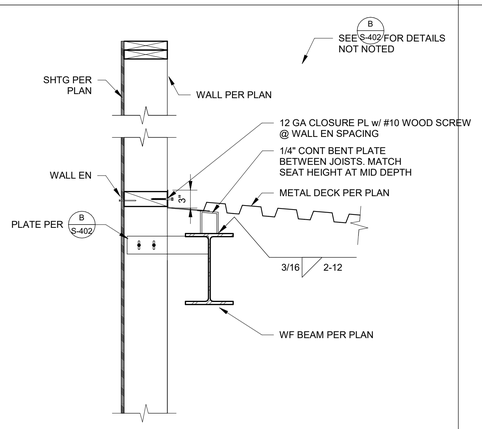

SECTION D S-402
1" = 1'-0"

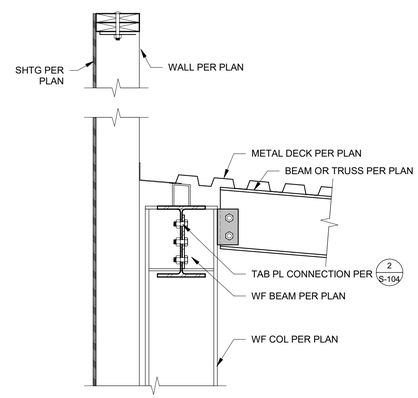

SECTION E S-402
1" = 1'-0"

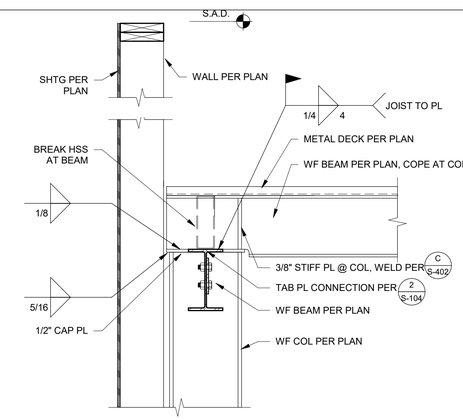

SECTION F S-402
1" = 1'-0"

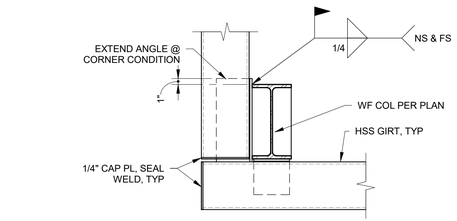

AT CORNER

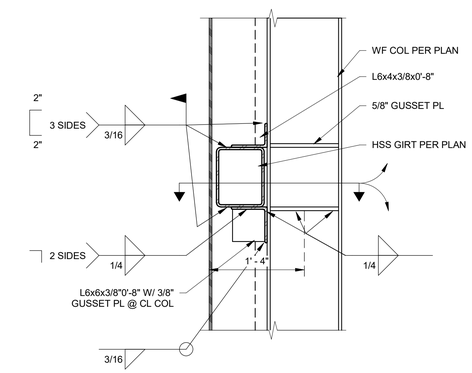

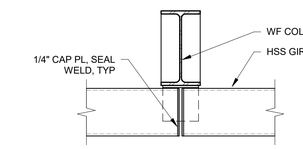

TYPICAL

SECTION G S-402
1" = 1'-0"

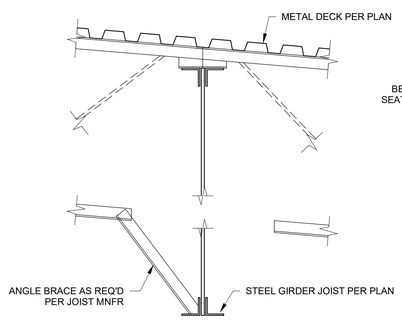

@ STEEL JOISTS

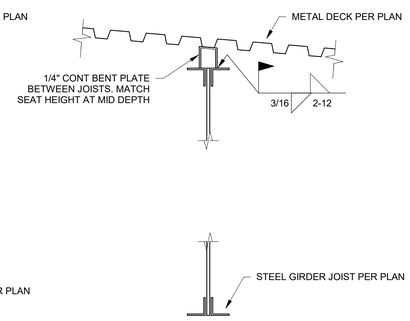

@ METAL DECK

SECTION H S-402
1" = 1'-0"

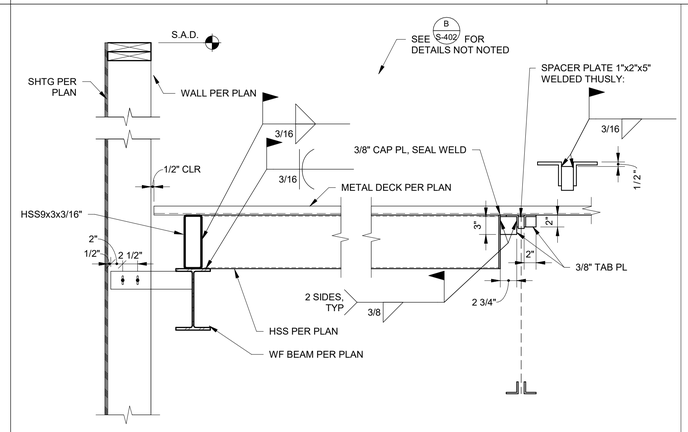

SECTION J S-402
1" = 1'-0"

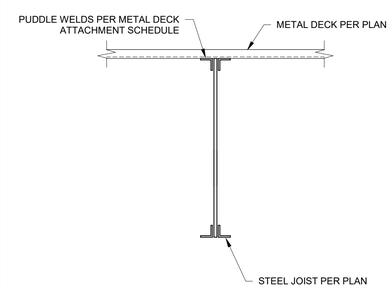

SECTION K S-402
1" = 1'-0"

rrm design group
rrmdesign.com | (805) 543-1794
3765 SOUTH HIGUERA STREET SUITE 102
SAN LUIS OBISPO, CA 93401

THE INCLUDED DRAWINGS, SPECIFICATIONS, IDEAS, DESIGNS AND ARRANGEMENTS REPRESENTED THEREBY ARE AND SHALL REMAIN THE PROPERTY OF RRM DESIGN GROUP AND NO PART THEREOF SHALL BE COPIED, DISCLOSED TO OTHERS OR SUBSTANTIALLY USED FOR ANY PURPOSE WITHOUT THE PERMISSION OF RRM DESIGN GROUP FOR WHICH THEY HAVE BEEN PREPARED AND DEVELOPED WITHOUT THE WRITTEN CONSENT OF RRM DESIGN GROUP. VISUAL CONTACT WITH THESE DRAWINGS OR SPECIFICATIONS SHALL CONSTITUTE CONCLUSIVE EVIDENCE OF ACCEPTANCE OF THESE RESTRICTIONS. SUBMITTAL OF PRELIMINARY DRAWINGS FOR REVIEW SHALL NOT BE CONSIDERED A WAIVER OF RRM DESIGN GROUP'S RIGHTS.
RRM DESIGN GROUP COPYRIGHT 2023
RRM IS A CALIFORNIA CORPORATION

REGISTERED PROFESSIONAL ENGINEER
JUSTIN G. LEE
No. S6623
EXP. 3/31/25
STRUCTURAL
STATE OF CALIFORNIA

CONSULTANT

CORNERSTONE structural engineering group
986 W. Alluvial, Suite 201
Fresno, California 93711
559.320.3200
fax 559.320.3201

AGENCY

PORTERVILLE COMMUNITY CENTER
N 4TH ST, PORTERVILLE, CA 93257

ROOF FRAMING DETAILS No. 2

NO.	REVISION	DATE

PROJECT MANAGER
DRAWN BY | CHECKED BY
DATE 09.10.24
PROJECT NUMBER 2883-01-RC22
SHEET S-402

CONSTRUCTION DOCUMENTS

9/10/2024 2:25:12 PM
\\seg-f-fs51\Home$\markw\Porterville_2022_Structural_danderson@seg.com.rvt

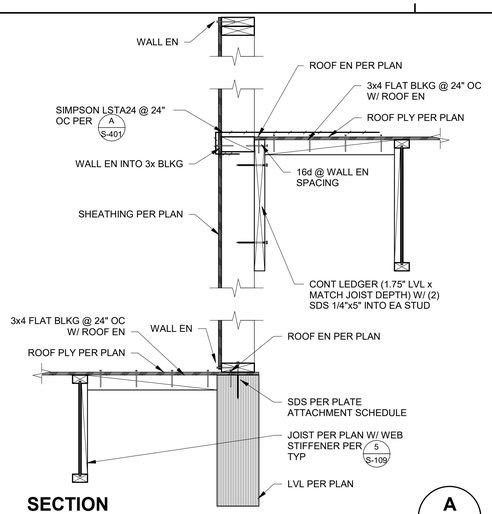

SECTION A S-403
1" = 1'-0"

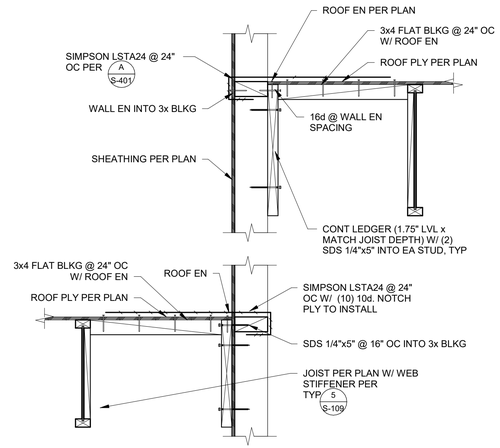

SECTION B S-403
1" = 1'-0"

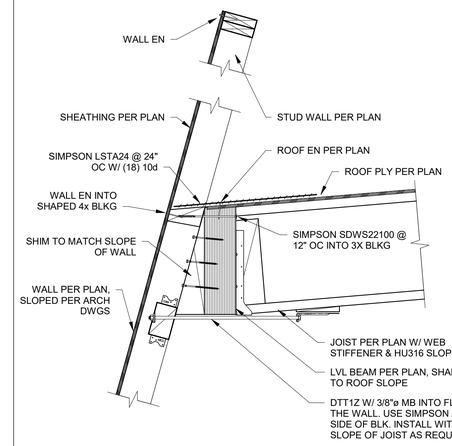

SECTION C S-403
1" = 1'-0"

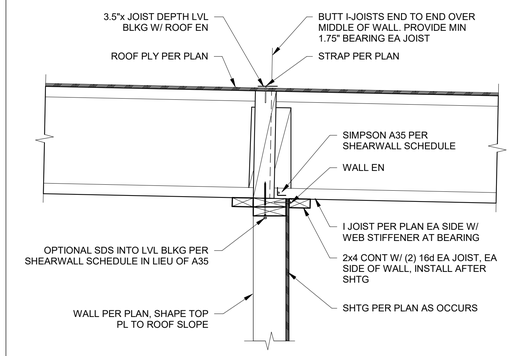

SECTION D S-403
1" = 1'-0"

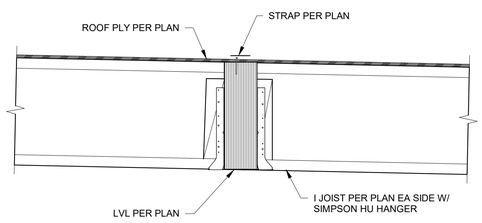

SECTION E S-403
1" = 1'-0"

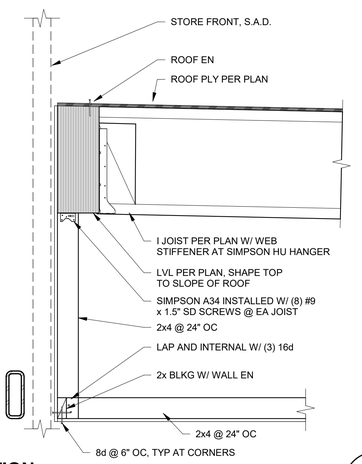

SECTION F S-403
1" = 1'-0"

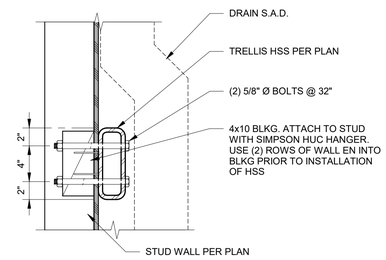

SECTION G S-403
1 1/2" = 1'-0"

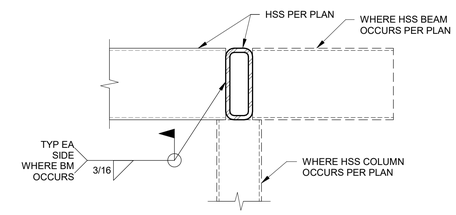

SECTION H S-403
1 1/2" = 1'-0"

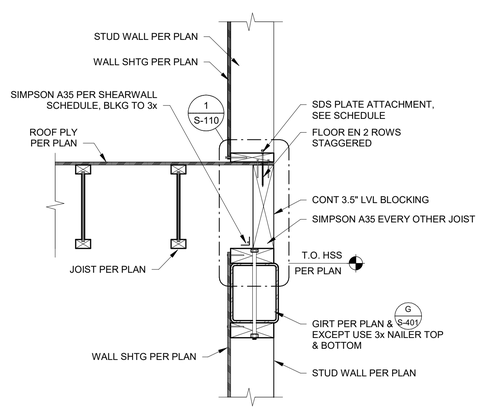

SECTION J S-403
1" = 1'-0"

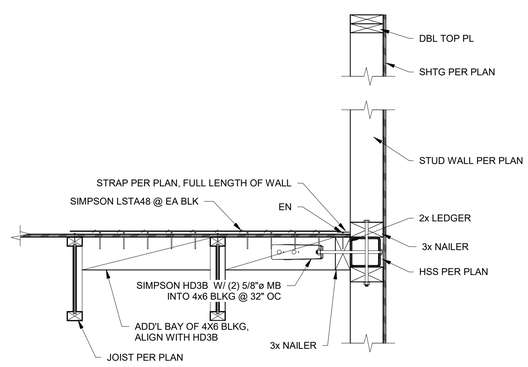

SECTION K S-403
1" = 1'-0"

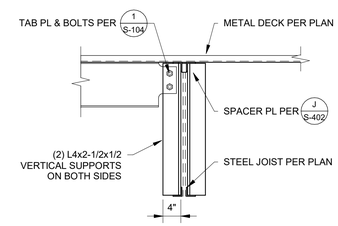

SECTION L S-403
3/4" = 1'-0"

rrm design group
rrmdesign.com | (805) 543-1794
3765 SOUTH HIGUERA STREET, SUITE 102
SAN LUIS OBISPO, CA 93401

THE INCLUDED DRAWINGS, SPECIFICATIONS, IDEAS, DESIGNS AND ARRANGEMENTS REPRESENTED THEREBY ARE AND SHALL REMAIN THE PROPERTY OF RRM DESIGN GROUP AND NO PART THEREOF SHALL BE COPIED, DISCLOSED TO OTHERS OR SUBSTANTIALLY UTILIZED FOR ANY PURPOSE WITHOUT THE PRIOR WRITTEN CONSENT OF PROJECT FOR WHICH THEY HAVE BEEN PREPARED AND DEVELOPED WITHOUT THE WRITTEN CONSENT OF RRM DESIGN GROUP. VISUAL CONTACT WITH THESE DRAWINGS OR SPECIFICATIONS SHALL CONSTITUTE CONCLUSIVE EVIDENCE OF ACCEPTANCE OF THESE RESTRICTIONS. SUBMITTAL OF PRELIMINARY DRAWINGS FOR REVIEW SHALL NOT BE DEEMED AS A WAIVER OF CALIFORNIA DESIGN GROUP'S RIGHTS.
RRM DESIGN GROUP COPYRIGHT 2023
RRM IS A CALIFORNIA CORPORATION

REGISTERED PROFESSIONAL ENGINEER
AUSTIN G. LEE
No. S6623
EXP. 3/31/25
STRUCTURAL
STATE OF CALIFORNIA

CONSULTANT

CORNERSTONE
structural engineering group
986 W. Alluvial, Suite 201
Fresno, California 93711
559.320.3200
fax 559.320.3201

AGENCY

PORTERVILLE COMMUNITY CENTER
N 4TH ST, PORTERVILLE, CA 93257

ROOF FRAMING DETAILS No. 3

NO.	REVISION	DATE
1	Plan Check Revision 1	5/17/24

PROJECT MANAGER
DRAWN BY | CHECKED BY
DATE 09.10.24
PROJECT NUMBER 2883-01-RC22
SHEET S-403

CONSTRUCTION DOCUMENTS

9/10/2024 2:25:12 PM
\\cseg-fs-fs01\home$\markw\Porterville_2022_Structural_danderson@cseg.com.rvt

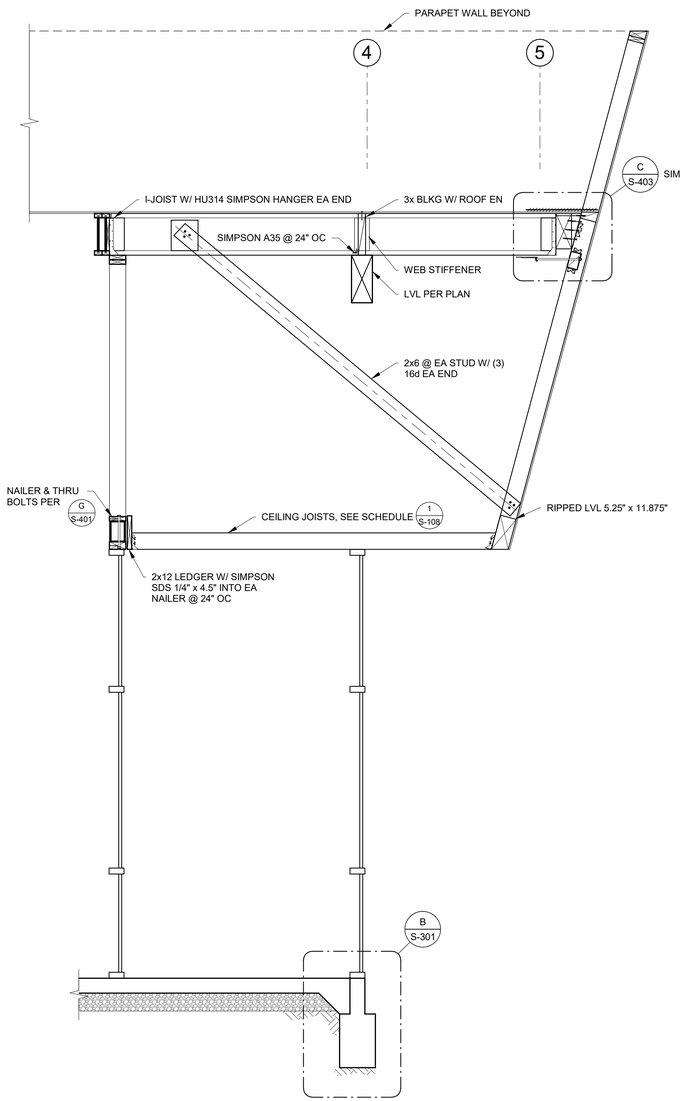

SECTION A S-501

1/2" = 1'-0"

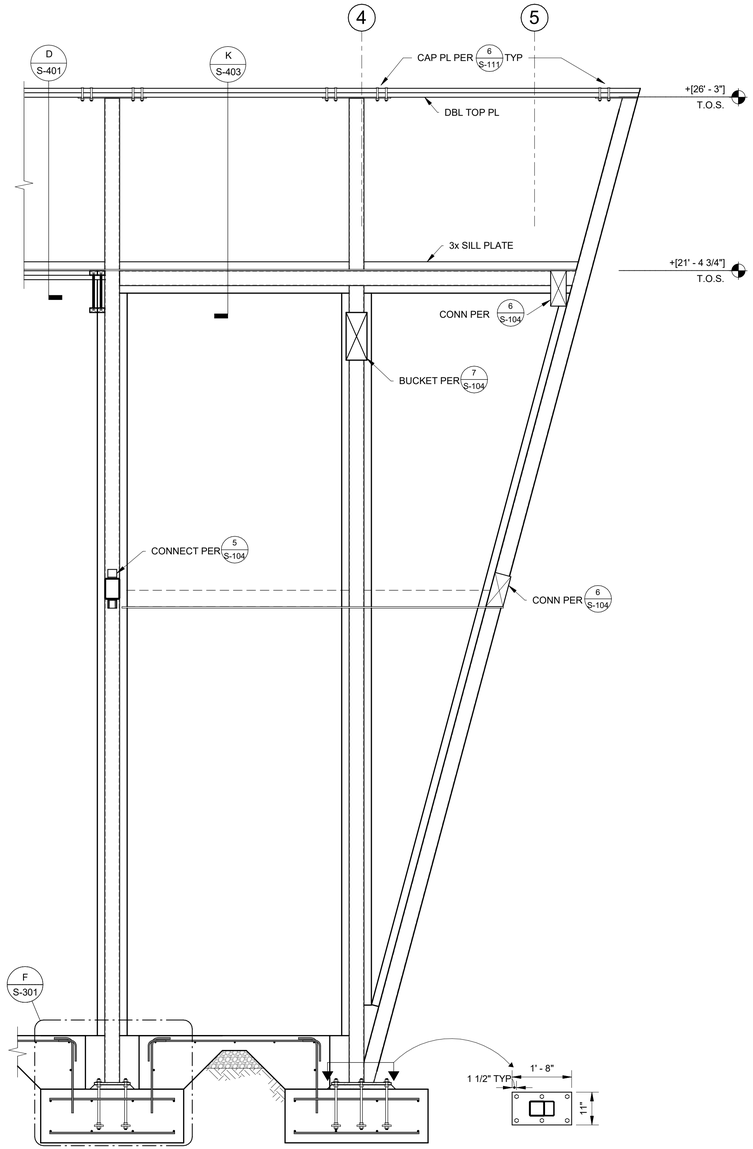

SECTION B S-501

1/2" = 1'-0"

rrm design group

rrmdesign.com | (805) 543-1794

3765 SOUTH HIGUERA STREET SUITE 102

SAN LUIS OBISPO, CA 93401

THE INCLUDED DRAWINGS, SPECIFICATIONS, IDEAS, DESIGNS AND ARRANGEMENTS REPRESENTED THEREBY ARE AND SHALL REMAIN THE PROPERTY OF RRM DESIGN GROUP AND NO PART THEREOF SHALL BE COPIED, DISCLOSED TO OTHERS OR USED IN CONNECTION WITH ANY WORK OR PROJECT OTHER THAN THE SPECIFIED PROJECT FOR WHICH THEY HAVE BEEN PREPARED AND DEVELOPED WITHOUT THE WRITTEN CONSENT OF RRM DESIGN GROUP. VISUAL CONTACT WITH THESE DRAWINGS OR SPECIFICATIONS SHALL CONSTITUTE CONCLUSIVE EVIDENCE OF ACCEPTANCE OF THESE RESTRICTIONS. SUBMITTAL OF PRELIMINARY DRAWINGS FOR REVIEW SHALL NOT BE CONSIDERED A WAIVER OF RRM DESIGN GROUP'S RIGHTS.

RRM DESIGN GROUP COPYRIGHT 2023

RRM IS A CALIFORNIA CORPORATION

REGISTERED PROFESSIONAL ENGINEER
JUSTIN G. LEE
No. S6623
EXP. 3/31/25
STRUCTURAL
STATE OF CALIFORNIA

CONSULTANT

CORNERSTONE structural engineering group

986 W. Alluvial, Suite 201
Fresno, California 93711
559.320.3200
fax 559.320.3201

AGENCY

PORTERVILLE COMMUNITY CENTER

N 4TH ST, PORTERVILLE, CA 93257

WALL SECTIONS No. 1

NO.	REVISION	DATE
1	Plan Check Revision 1	5/17/24

PROJECT MANAGER

DRAWN BY | CHECKED BY

DATE
09.10.24

PROJECT NUMBER
2883-01-RC22

SHEET
S-501 1

CONSTRUCTION DOCUMENTS

9/10/2024 2:25:13 PM
\\seg-fr-fs01\frhome$\markw\Porterville_2022_Structural_danderson@cseg.com.rvt

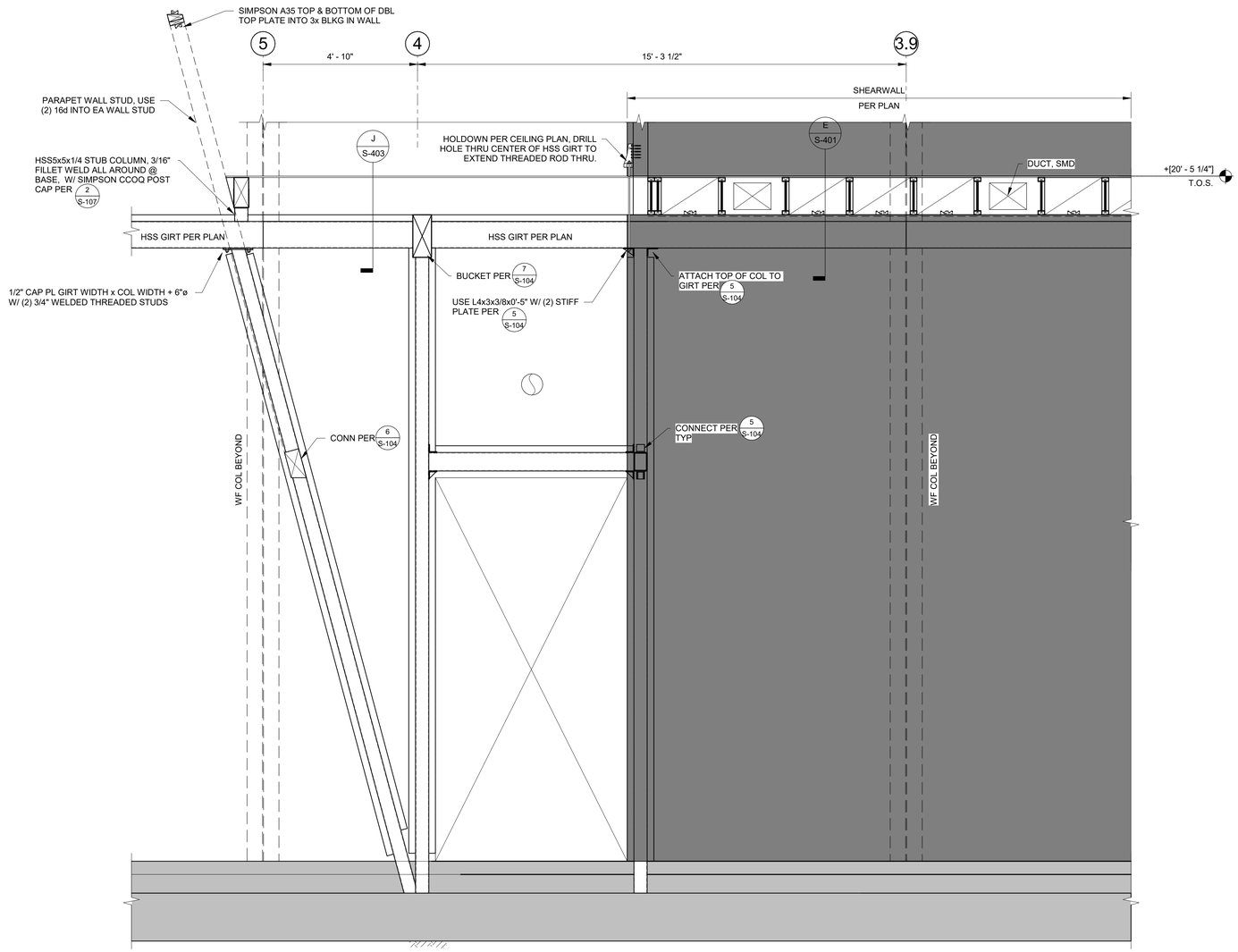

SECTION A S-502

1/2" = 1'-0"

rrm design group

rrmdesign.com | (805) 543-1794
3765 SOUTH HIGUERA STREET, SUITE 102
SAN LUIS OBISPO, CA 93401

THE INCLUDED DRAWINGS, SPECIFICATIONS, IDEAS, DESIGNS AND ARRANGEMENTS REPRESENTED THEREBY ARE AND SHALL REMAIN THE PROPERTY OF RRM DESIGN GROUP AND NO PART THEREOF SHALL BE COPIED, DISCLOSED TO OTHERS OR USED IN CONNECTION WITH ANY WORK OR PROJECT OTHER THAN THE SPECIFIED PROJECT FOR WHICH THEY HAVE BEEN PREPARED AND DEVELOPED WITHOUT THE WRITTEN CONSENT OF RRM DESIGN GROUP. VISUAL CONTACT WITH THESE DRAWINGS OR SPECIFICATIONS SHALL CONSTITUTE CONCLUSIVE EVIDENCE OF ACCEPTANCE OF THESE RESTRICTIONS. SUBMITTAL OF THESE DOCUMENTS FOR PUBLIC AGENCY REVIEW SHALL NOT BE CONSIDERED A WAIVER OF RRM DESIGN GROUP'S RIGHTS.
RRM DESIGN GROUP COPYRIGHT 2023
RRM IS A CALIFORNIA CORPORATION

REGISTERED PROFESSIONAL ENGINEER
DUSTIN G. LEE
No. S6623
EXP. 3/31/25
STRUCTURAL
STATE OF CALIFORNIA

CONSULTANT

CORNERSTONE
structural engineering group
986 W. Alluvial, Suite 201
Fresno, California 93711
559.320.3200
fax 559.320.3201

AGENCY

PORTERVILLE COMMUNITY CENTER
N 4TH ST, PORTERVILLE, CA 93257

WALL SECTIONS No. 2

NO.	REVISION	DATE
1	Plan Check Revision 1	5/17/24

PROJECT MANAGER

DRAWN BY | CHECKED BY

DATE
09.10.24

PROJECT NUMBER
2883-01-RC22

SHEET
S-502 1

CONSTRUCTION DOCUMENTS

9/10/2024 2:25:13 PM
\\cseg-fr-fs01\fnome$\markw\Porterville_2022_Structural_danderson@cseg.com.rvt

CAL GREEN CODE NONRESIDENTIAL MANDATORY MEASURES, CONT'D

SECTION 702.1 INSTALLER TRAINING

HVAC SYSTEM INSTALLERS SHALL BE TRAINED AND CERTIFIED IN THE PROPER INSTALLATION OF HVAC SYSTEMS INCLUDING DUCTS AND EQUIPMENT BY A NATIONALLY OR REGIONALLY RECOGNIZED TRAINING OR CERTIFICATION PROGRAM. UNCERTIFIED PERSONS MAY PERFORM HVAC INSTALLATIONS WHEN UNDER THE DIRECT SUPERVISION AND RESPONSIBILITY OF A PERSON TRAINED AND CERTIFIED TO INSTALL HVAC SYSTEMS OR CONTRACTOR LICENSED TO INSTALL HVAC SYSTEMS. EXAMPLES OF ACCEPTABLE HVAC TRAINING AND CERTIFICATION PROGRAMS INCLUDE BUT ARE NOT
LIMITED TO THE FOLLOWING:
1. STATE CERTIFIED APPRENTICESHIP PROGRAMS.
2. PUBLIC UTILITY TRAINING PROGRAMS.
3. TRAINING PROGRAMS SPONSORED BY TRADE, LABOR OR STATE-WIDE ENERGY CONSULTING OR VERIFICATION ORGANIZATIONS.
4. PROGRAMS SPONSORED BY MANUFACTURING ORGANIZATIONS.
5. OTHER PROGRAMS ACCEPTABLE TO THE ENFORCING AGENCY

MECHANICAL ABBREVIATIONS

AC	AIR CONDITION, AIR CONDITIONING, AIR CONDITIONED	HP	HORSE POWER
ABV	ABOVE	HVI	HOME VENTILATING INSTITUTE
AFF	ABOVE FINISHED FLOOR	HZ	HERTZ
AFUE	ANNUAL FUEL UTILIZATION EFFICIENCY	IDU	INDOOR UNIT
AHJ	AUTHORITY HAVING JURISDICTION	IWC	INCHES OF WATER COLUMN
AHU	AIR HANDLING UNIT	KW	KILOWATT
ALUM	ALUMINUM	LBS	POUNDS
AMCA	AIR MOVEMENT AND CONTROL ASSOCIATION	LWT	LEAVING WATER TEMPERATURE
AMB	AMBIENT	MBH	1000 BRITISH THERMAL UNITS PER HOUR
AP	ACCESS PANEL	MCA	MINIMUM CIRCUIT AMPS
ARCH	ARCHITECT, ARCHITECTURAL	MFGR	MANUFACTURE OR MANUFACTURER
ARI	AMERICAN REFRIGERATION INSTITUTE	MIN	MINIMUM
ASHRAE	AMERICAN SOCIETY OF HEATING, REFRIGERATION, AND AIR CONDITIONING ENGINEERS	MUA	MAKE-UP AIR
BDD	BACK DRAFT DAMPER	(N)	NEW
BOD	BASIS OF DESIGN	NL	NOT LISTED
BEL	BELOW	NOM	NOMINAL
BHP	BRAKE HORSE POWER	NTS	NOT TO SCALE
BLDG	BUILDING	OA	OUTSIDE AIR
BTUH	BRITISH THERMAL UNIT PER HOUR	OAI	OUTSIDE AIR INTAKE
CA	COMBUSTION AIR	OBD	OPPOSED BLADE DAMPER
CD	CONDENSATE DRAIN	ODU	OUTDOOR UNIT
CFD	CEILING FIRE DAMPER	OSHPD	OFFICE OF STATEWIDE HEALTH PLANNING AND DEVELOPMENT
CFM	CUBIC FEET PER MINUTE	PD	PRESSURE DROP
CONT	CONTINUATION	PSI	POUNDS PER SQUARE INCH
CSD	CEILING SMOKE DAMPER	RA	RETURN AIR
DB	DRY BULB TEMPERATURE	REFRIG	REFRIGERANT, REFRIGERATION
DN	DOWN	RM	ROOM
DSA	DIVISION OF THE STATE ARCHITECT	RPM	REVOLUTIONS PER MINUTE
DTR	DOWN THROUGH ROOF	SA	SUPPLY AIR
(E)	EXISTING	SEER	SEASONAL ENERGY EFFICIENCY RATION
EA	EXHAUST AIR	SHT	SHEET
EC	EVAPORATIVE COOLER	SMACNA	SHEET METAL AND AIR CONDITIONING CONTRACTORS NATIONAL ASSOCIATION
EDB	ENTERING DRY BULB TEMPERATURE	SOV	SHUT OFF VALVE
EER	ENERGY EFFICIENCY RATIO	SP	STATIC PRESSURE
EFF	EFFICIENCY	SS	STAINLESS STEEL
ELEC	ELECTRICAL	SSE	STEADY STATE EFFICIENCY
ESP	EXTERNAL STATIC PRESSURE	SST	SATURATED SUCTION TEMPERATURE
EWB	ENTERING WET BULB	TEMP	TEMPORARY, TEMPERATURE
EWT	ENTERING WATER TEMPERATURE	TSP	TOTAL STATIC PRESSURE
FA	FROM ABOVE	TYP	TYPICAL
FC	FLEXIBLE CONNECTION	TXV	THERMAL EXPANSION VALVE
FD	FIRE DAMPER	UON	UNLESS OTHERWISE NOTED
FLA	FULL LOAD AMPS	UTR	UP TO OR UP THROUGH ROOF
FPM	FEET PER MINUTE	VD	VOLUME DAMPER
FSC	FAN SPEED CONTROLLER	VEX	VEHICLE EXHAUST SYSTEM
FSD	FIRE/SMOKE DAMPER	VRF	VARIABLE REFRIGERANT VOLUME
GA	GAGE, GAUGE	WB	WET BULB TEMPERATURE
GALV	GALVANIZED	WC	WATER COLUMN
GPM	GALLONS PER MINUTE	WG	WATER GAUGE
GYP	GYPSUM	WT	WEIGHT EXPRESSED IN POUNDS
HD	HEAD		

CAL GREEN CODE NONRESIDENTIAL MANDATORY MEASURES

DIVISION 5.4-MATERIAL CONSERVATION AND RESOURCE EFFICIENCY

5.410.2 COMMISSIONING. FOR NEW BUILDINGS 10,000 SQUARE FEET AND OVER, BUILDING COMMISSIONING SHALL BE INCLUDED IN THE DESIGN AND CONSTRUCTION PROCESSES OF THE BUILDING PROJECT TO VERIFY THAT THE BUILDING SYSTEMS AND COMPONENTS MEET THE OWNER'S OR OWNER REPRESENTATIVE'S PROJECT REQUIREMENTS.

REFER TO THE PROJECT SPECIFICATIONS FOR COMMISSIONING REQUIREMENTS.

5.410.4 TESTING AND ADJUSTING. TESTING AND ADJUSTING OF SYSTEMS SHALL BE REQUIRED FOR NEW BUILDINGS LESS THAN 10,000 SQUARE FEET OR NEW SYSTEMS TO SERVE AN ADDITION OR ALTERATION SUBJECT TO 2022 CGBSC 303.1.
5.410.4.2 SYSTEMS. DEVELOP A WRITTEN PLAN OF PROCEDURES FOR TESTING AND ADJUSTING SYSTEMS. SYSTEMS TO BE INCLUDED FOR TESTING AND ADJUSTING SHALL INCLUDE AT A MINIMUM, AS APPLICABLE TO THE PROJECT:
1. HVAC SYSTEMS AND CONTROLS
2. WATER HEATING SYSTEMS
3. WATER REUSE SYSTEMS
5.410.4.3 PROCEDURES. PERFORM TESTING AND ADJUSTING PROCEDURES IN ACCORDANCE WITH MANUFACTURER'S SPECIFICATIONS AND APPLICABLE STANDARDS ON EACH SYSTEM.

AT A MINIMUM THE MECHANICAL CONTRACTOR SHALL OBTAIN THE LATEST START-UP CHECK LIST(S) FROM THE EQUIPMENT MANUFACTURER AND PERFORM ALL TESTS AND CHECKS APPLICABLE. AFTER COMPLETION OF THE START-UP CHECK LIST THE MECHANICAL CONTRACTOR SHALL MAKE ADJUSTMENTS TO PUT THE EQUIPMENT IN PEAK WORKING ORDER. MECHANICAL CONTRACTOR SHALL DOCUMENT ALL WORK PERFORMED. CLOSE OUT DOCUMENTATION PROVIDED TO THE GENERAL CONTRACTOR SHALL INCLUDE ALL COMPLETED CHECK LIST(S) AND DOCUMENTATION FOR ANY WORK PERFORMED. THE GENERAL CONTRACTOR SHALL SUBMIT THE CHECK LIST(S) AND WORK DOCUMENTATION TO ENGINEER OF RECORD.

5.410.4.3.1 HVAC BALANCING. IN ADDITION TO TESTING AND ADJUSTING, BEFORE A NEW SPACE-CONDITIONING SYSTEM SERVING A BUILDING OR SPACE IS OPERATED FOR NORMAL USE, THE SYSTEM SHALL BE BALANCED IN ACCORDANCE WITH THE PROCEDURES DEFINED BY THE TESTING ADJUSTING AND BALANCING BUREAU NATIONAL STANDARDS; THE NATIONAL ENVIRONMENTAL BALANCING BUREAU PROCEDURAL STANDARDS; ASSOCIATED AIR BALANCE COUNCIL NATIONAL STANDARDS OR AS APPROVED BY THE BUILDING ENFORCING AGENCY.

SEE SPECIFICATION SECTION 23 00 13 FOR HVAC BALANCING REQUIREMENTS.

5.410.4.4 REPORTING. AFTER COMPLETION OF TESTING, ADJUSTING AND BALANCING, PROVIDE A FINAL REPORT OF TESTING SIGNED BY THE INDIVIDUAL RESPONSIBLE FOR PERFORMING THESE SERVICES.

5.410.4.5 OPERATION AND MAINTENANCE (O&M) MANUAL. PROVIDE THE BUILDING OWNER OR REPRESENTATIVE WITH DETAILED OPERATING AND MAINTENANCE INSTRUCTIONS AND COPIES OF GUARANTIES/WARRANTIES FOR EACH SYSTEM. O&M INSTRUCTIONS SHALL BE CONSISTENT WITH OSHA REQUIREMENTS IN CCR, TITLE 8, SECTION 5142, AND OTHER RELATED REGULATIONS.

5.410.4.5.1 INSPECTIONS AND REPORTS. INCLUDE A COPY OF ALL INSPECTION VERIFICATIONS AND REPORTS REQUIRED BY THE ENFORCING AGENCY.

DIVISION 5.5-ENVIRONMENTAL QUALITY

SECTION 5.504 POLLUTANT CONTROL

5.504.1 TEMPORARY VENTILATION. THE PERMANENT HVAC SYSTEM SHALL ONLY BE USED DURING CONSTRUCTION IF NECESSARY TO CONDITION THE BUILDING WITHIN THE REQUIRED TEMPERATURE RANGE FOR MATERIAL AND EQUIPMENT INSTALLATION. IF THE HVAC SYSTEM IS USED DURING CONSTRUCTION, USE RETURN AIR FILTERS WITH A MINIMUM EFFICIENCY REPORTING VALUE (MERV) OF 8, BASED ON ASHRAE 52.2-1999, OR AN AVERAGE EFFICIENCY OF 30% BASED ON ASHRAE 52.1-1992. REPLACE ALL FILTERS IMMEDIATELY PRIOR TO OCCUPANCY, OR, IF THE BUILDING IS OCCUPIED DURING ALTERATION, AT THE CONCLUSION OF CONSTRUCTION.

5.504.3 COVERING OF DUCT OPENINGS AND PROTECTION OF MECHANICAL EQUIPMENT DURING CONSTRUCTION. AT THE TIME OF ROUGH INSTALLATION AND DURING STORAGE ON THE CONSTRUCTION SITE UNTIL FINAL STARTUP OF THE HEATING, COOLING AND VENTILATING EQUIPMENT, ALL DUCT AND OTHER RELATED AIR DISTRIBUTION COMPONENT OPENINGS SHALL BE COVERED WITH TAPE, PLASTIC, SHEET METAL OR OTHER METHODS ACCEPTABLE TO THE ENFORCING AGENCY TO REDUCE THE AMOUNT OF DUST, WATER AND DEBRIS WHICH MAY ENTER THE SYSTEM.

5.504.4.1 ADHESIVES, SEALANTS AND CAULKS. ADHESIVES, SEALANTS, AND CAULKS USED ON THE PROJECT SHALL MEET THE REQUIREMENTS OF THE FOLLOWING STANDARDS:
1. ADHESIVES, ADHESIVE BONDING PRIMERS, ADHESIVE PRIMERS, SEALANTS, SEALANT PRIMERS AND CAULKS SHALL COMPLY WITH LOCAL OR REGIONAL AIR POLLUTION CONTROL OR AIR QUALITY MANAGEMENT DISTRICT RULES WHERE APPLICABLE, OR SCAQMD RULE 1168 VOC LIMITS, AS SHOWN IN TABLES 5.504.4.1 AND 5.504.4.2. SUCH PRODUCTS ALSO SHALL COMPLY WITH THE RULE 1168 PROHIBITION ON THE USE OF CERTAIN TOXIC COMPOUNDS (CHLOROFORM, ETHYLENE DICHLORIDE, METHYLENE CHLORIDE, PERCHLOROETHYLENE AND TRICHLOROETHYLENE), EXCEPT FOR AEROSOL PRODUCTS AS SPECIFIED IN SUBSECTION 2, BELOW.
2. AEROSOL ADHESIVES, AND SMALLER UNIT SIZES OF ADHESIVES, AND SEALANT OR CAULKING COMPOUNDS (IN UNITS OF PRODUCT, LESS PACKAGING, WHICH DO NOT WEIGH MORE THAN ONE POUND AND DO NOT CONSIST OF MORE THAN 16 FLUID OUNCES) SHALL COMPLY WITH STATEWIDE VOC STANDARDS AND OTHER REQUIREMENTS, INCLUDING PROHIBITIONS ON USE OF CERTAIN TOXIC COMPOUNDS, OF CALIFORNIA CODE OF REGULATIONS, TITLE 17, COMMENCING WITH SECTION 94507.

TABLE 5.504.4.1 ADHESIVE VOC LIMIT
LESS WATER AND LESS EXEMPT COMPOUNDS IN GRAMS PER LITER

SPECIALTY APPLICATIONS	CURRENT VOC LIMIT
PVC WELDING	510
CPVC WELDING	490
ABS WELDING	325
SPECIAL PURPOSE CONTACT ADHESIVE	250

1. IF AN ADHESIVE IS USED TO BOND DISSIMILAR SUBSTRATES TOGETHER THE ADHESIVE WITH THE HIGHEST VOC CONTENT SHALL BE ALLOWED.
2. FOR ADDITIONAL INFORMATION REGARDING METHODS TO MEASURE THE VOC CONTENT SPECIFIED IN THIS TABLE, SEE SOUTH COAST AIR QUALITY MANAGEMENT DISTRICT RULE 1168, HTTP://WWW.ARB.CA.GOV/DRDB/SC/CURHTML/R1168.PDF.

5.504.5.3 FILTERS. IN MECHANICALLY VENTILATED BUILDINGS, PROVIDE REGULARLY OCCUPIED AREAS OF THE BUILDING WITH AIR FILTRATION MEDIA FOR OUTSIDE AND RETURN AIR THAT PROVIDES AT LEAST A MINIMUM EFFICIENCY REPORTING VALUE (MERV) OF 13. MERV 13 FILTERS SHALL BE INSTALLED PRIOR TO OCCUPANCY, AND RECOMMENDATIONS FOR MAINTENANCE WITH FILTERS OF THE SAME VALUE SHALL BE INCLUDED IN THE OPERATION AND MAINTENANCE MANUAL. FILTERS SHALL BE CLEARLY LABELED BY THE MANUFACTURER INDICATING THE MERV RATING.

EXCEPTIONS:
1. EXISTING MECHANICAL EQUIPMENT.

SECTION 5.505 INDOOR MOISTURE CONTROL

5.505.1 INDOOR MOISTURE CONTROL. BUILDINGS SHALL MEET OR EXCEED THE PROVISIONS OF CALIFORNIA BUILDING CODE, CCR, TITLE 24, PART 2, SECTIONS 1202 (VENTILATION) AND CHAPTER 14 (EXTERIOR WALLS). FOR ADDITIONAL MEASURES NOT APPLICABLE TO LOW-RISE RESIDENTIAL OCCUPANCIES, SEE SECTION 5.407.2 OF THIS CODE.

SECTION 5.506 INDOOR AIR QUALITY

5.506.1 OUTSIDE AIR DELIVERY. FOR MECHANICALLY OR NATURALLY VENTILATED SPACES IN BUILDINGS, MEET THE MINIMUM REQUIREMENTS OF SECTION 120.1 (REQUIREMENTS FOR VENTILATION) OF THE 2022 CALIFORNIA ENERGY CODE, OR THE APPLICABLE LOCAL CODE, WHICHEVER IS MORE STRINGENT, AND DIVISION 1, CHAPTER 4 OF CCR, TITLE 8.

5.506.2 CARBON DIOXIDE (CO2) MONITORING. FOR BUILDINGS OR ADDITIONS EQUIPPED WITH DEMAND CONTROL VENTILATION, CO2 SENSORS AND VENTILATION CONTROLS SHALL BE SPECIFIED AND INSTALLED IN ACCORDANCE WITH THE REQUIREMENTS OF THE 2022 CALIFORNIA ENERGY CODE, SECTION 120.1(C)(4).

SECTION 5.508 OUTDOOR AIR QUALITY

5.508.1 OZONE DEPLETION AND GREENHOUSE GAS REDUCTIONS. INSTALLATIONS OF HVAC, REFRIGERATION AND FIRE SUPPRESSION EQUIPMENT SHALL COMPLY WITH SECTIONS 5.508.1.1 AND 5.508.1.2.

5.508.1.1 CHLOROFLUOROCARBONS (CFCS). INSTALL HVAC, REFRIGERATION AND FIRE SUPPRESSION EQUIPMENT THAT DO NOT CONTAIN CFCS.

5.508.1.2 HALONS. INSTALL HVAC, REFRIGERATION AND FIRE SUPPRESSION EQUIPMENT THAT DO NOT CONTAIN HALONS.

MECHANICAL LEGEND

SYMBOL	ABBREVIATION	DESCRIPTION
Ø	DIA	DIAMETER
		CEILING MOUNTED SUPPLY OR OUTSIDE AIR DIFFUSER
		CEILING MOUNTED RETURN AIR GRILLE
		CEILING MOUNTED EXHAUST AIR GRILLE
		SIDEWALL MOUNTED SUPPLY AIR DIFFUSER, RETURN AIR GRILLE, LOUVER
	24X12, 24X12 FO	RECTANGULAR, FLAT OVAL DUCT
	24X12L, 12ØL	LINED DUCT
		RECTANGULAR SUPPLY / OA, RETURN, EXHAUST / RELIEF DUCT PASSING THROUGH PLAIN OF VIEW
		RECTANGULAR SUPPLY / OA, RETURN, EXHAUST / RELIEF DUCT TURNING DOWN
	12Ø	ROUND DUCT
		ROUND DUCT TURNING DOWN, ROUND DUCT TURNING UP
		90° ELBOW WITH TURNING VAINS
		FLEXIBLE DUCT 60" MAX LENGTH
	FC	FLEXIBLE CONNECTION
	VD	MANUAL VOLUME DAMPER
	CVD	CABLE OPERATED VOLUME DAMPER
		ACCESS CLEARANCE
		ROOF CAP
		CEILING EXHAUST FAN
REF REF		REFRIGERATION LINES

CONTROLS LEGEND

SYMBOL	ABBREVIATION	DESCRIPTION
CO	CO	CARBON MONOXIDE SENSOR
DSD		DUCT MOUNTED SMOKE DETECTOR
FSC EF-X	FSC	FAN SPEED CONTROLLER, SUBSCRIPT INDICATES ASSOCIATED FAN
PP		PRESSURE PORT
$ EF-X		SINGLE POLE SWITCH, SUBSCRIPT INDICATES ASSOCIATED FAN
T AC-#		THERMOSTAT, SUBSCRIPT INDICATES UNIT CONTROLLED
TS	TS	TEMPERATURE SENSOR

PROJECT TEAM LIST

TITLE	NAME	DESK NUMBER	EMAIL ADDRESS
PRINCIPAL IN CHARGE	BRIAN STARRETT	805.540.5358	BSTARRETT@3CENG.COM
PROJECT MANAGER	DENVER STANGER	805.540.5388	DSTANGER@3CENG.COM
MECHANICAL DESIGNER	BEN SWANSON	805.540.3363 EXT 317	BSWANSON@3CENG.COM
PLUMBING DESIGNER	RANDY CARMINATI	805.540.3363 EXT 319	RCARMINATI@3CENG.COM
ENERGY COMPLIANCE	DANICA RESURRECCION	805.540.3363 EXT 313	DRESURRECCION@3CENG.COM

SHEET INDEX

SHEET NUMBER	SHEET TITLE
M-000	MECHANICAL GENERAL
M-001	MECHANICAL SCHEDULES
M-002	MECHANICAL SCHEDULES
M-003	MECHANICAL DETAILS
M-004	MECHANICAL DETAILS
M-005	MECHANICAL DETAILS
M-200	MECHANICAL OVERALL FLOOR PLAN
M-201	MECHANICAL FLOOR PLAN - WEST ENLARGED
M-202	MECHANICAL FLOOR PLAN - EAST ENLARGED
M-300	MECHANICAL OVERALL ROOF PLAN

MECHANICAL GENERAL NOTES

1 COMPLY WITH THE REQUIREMENTS OF THE FOLLOWING CODES:

2022 CALIFORNIA ADMINISTRATIVE CODE (CAC): PART 1, TITLE 24, CALIFORNIA CODE OF REGULATIONS (CCR)
2022 CALIFORNIA BUILDING CODE (CBC): PART 2, TITLE 24 CCR
2022 CALIFORNIA ELECTRICAL CODE (CEC): PART 3, TITLE 24 CCR
2022 CALIFORNIA MECHANICAL CODE (CMC): PART 4, TITLE 24 CCR
2022 CALIFORNIA PLUMBING CODE (CPC): PART 5, TITLE 24 CCR
2022 CALIFORNIA ENERGY CODE (CENC): PART 6, TITLE 24 CCR
2022 CALIFORNIA FIRE CODE (CFC): PART 9, TITLE 24 CCR
2022 CALIFORNIA GREEN BUILDING STANDARDS CODE (CAL GREEN): PART 11, TITLE 24 CCR

REPORT DEFICIENCIES WITHIN THIRTY (30) DAYS UPON AUTHORIZATION TO PROCEED.

2 THESE DRAWINGS ARE A GENERAL GRAPHIC PRESENTATION OF THE WORK. DUCTWORK, PIPING, AND EQUIPMENT, AS SHOWN, ARE SCHEMATIC. FABRICATE AND INSTALL BASED ON ACTUAL FIELD MEASUREMENT. COORDINATE WITH OTHER TRADES. ADHERE TO LOCATIONS AS CLOSELY AS POSSIBLE, VARY RUNS OR SHAPE OF DUCTWORK AS REQUIRED TO MEET STRUCTURAL AND OTHER INTERFERENCES AS REQUIRED BY THE ARCHITECT. PROVIDE A COMPLETE SET OF SHOP DRAWINGS REFLECTING ACTUAL DIMENSIONS, ACCESS REQUIREMENTS, AND DETAILS BASED UPON THE ACTUAL EQUIPMENT PROCURED. MAINTAIN AN UP TO DATE SET OF AS-BUILT DRAWINGS AT THE JOB SITE.

3 THE MECHANICAL CONTRACTOR SHALL COORDINATE ALL ITEMS RELATED TO MECHANICAL SYSTEMS WITH THE WORK OF OTHER TRADES BEFORE PROCEEDING WITH PROCURING OR FABRICATION OF EQUIPMENT, DUCTWORK, PIPING ETC. ITEMS TO BE COORDINATED SHALL INCLUDE BUT ARE NOT LIMITED TO THE FOLLOWING:

GRILLES, REGISTERS AND DIFFUSERS SHALL BE COORDINATED WITH THE REFLECTED CEILING PLAN.

DUCTWORK LOCATIONS AND POTENTIAL INTERFERENCES WITH STRUCTURAL MEMBERS, FRAMING, FIRE SPRINKLER LINES, PLUMBING WASTE LINES, CABLE TRAYS AND CONDUIT.

OPENINGS REQUIRED IN WALLS, FLOORS OR CEILINGS SHALL BE COORDINATED WITH THE GENERAL CONTRACTOR AND/OR FRAMING CONTRACTOR PRIOR TO THE START OF CONSTRUCTION TO AVOID REWORK. ANY REWORK REQUIRED SHALL BE AT NO ADDITIONAL COST TO THE OWNER.

PRIOR TO BIDDING THE PROJECT THE MECHANICAL CONTRACTOR SHALL COORDINATE WITH THE ELECTRICAL CONTRACTOR TO DETERMINE WHO WILL BE RESPONSIBLE FOR PROCURING AND INSTALLING MOTOR STARTERS, CONDUIT FOR LOW VOLTAGE CONTROLS AND LINE VOLTAGE CONTROL DEVICES, SUCH AS SINGLE POLE SWITCHES.

ACCESS TO VOLUME DAMPERS FOR BALANCING. ACCESS TO ALL EQUIPMENT, AS WELL AS PLATFORM AND CURB LOCATIONS.

CONSTRUCTION OF PLATFORMS AND SHAPED RUNNERS OR OTHER MEANS TO MOUNT CURBS LEVEL. ALL PLATFORMS AND CURBS SHALL BE LEVEL UNLESS OTHERWISE NOTED OR DETAILED ON THE MECHANICAL PLANS.

4 REVIEW ALL DRAWINGS AND SPECIFICATIONS INCLUDING ARCHITECTURAL, STRUCTURAL, CIVIL, MECHANICAL, PLUMBING, AND ELECTRICAL. ANY QUESTIONS SHALL BE BROUGHT UP, IN WRITING, TO THE ATTENTION OF THE ENGINEER BEFORE THE START OF CONSTRUCTION.

5 ALL EQUIPMENT SHALL BE INSTALLED WITH SUFFICIENT ACCESS TO CONTROLS, FILTERS, ELECTRIC MOTORS, ETC. ACCESS CLEARANCE SHALL BE 30" OR AS REQUIRED BY THE EQUIPMENT MANUFACTURER, WHICH EVER IS GREATER. CONTRACTORS SHALL PROVIDE ACCESS PANELS WHERE REQUIRED. WHERE VERTICAL SPACE ALLOWS, INSTALL DUCTWORK THAT IS IN CLOSE PROXIMITY TO MECHANICAL, ELECTRICAL OR ANY OTHER ITEM THAT REQUIRES ACCESS HIGH IN THE SPACE FOR EASE OF ACCESS.

6 PRIOR TO ROUGH-IN, COORDINATE THE ORIENTATION OF ELECTRICAL BOXES WITH THE DIMENSIONS OF THE DEVICE OR WALL PLATE THAT WILL BE INSTALLED IN OR ON THE ELECTRICAL BOX TO ENSURE THAT THE DEVICE IS CORRECTLY ORIENTED AND THE BOX IS PROPERLY ALIGNED TO BE COVERED BY THE DEVICE OR WALL PLATE.

7 HANDLE, STORE AND INSTALL EQUIPMENT PER MANUFACTURER'S INSTRUCTIONS.

8 BRACE AND SUPPORT PIPES, CONDUIT, AND DUCTWORK IN ACCORDANCE TO SMACNA GUIDELINES FOR SEISMIC RESTRAINTS OF MECHANICAL AND PLUMBING PIPING SYSTEM.

9 REFER TO ARCHITECTURAL REFLECTED CEILING PLAN FOR EXACT LOCATION OF DIFFUSERS, REGISTERS, GRILLES, AND ACCESS PANELS.

10 ALL DUCT DIMENSIONS, AS SHOWN ON MECHANICAL DRAWINGS ARE CLEAR INSIDE DIMENSIONS. INCREASE OUTER DUCT DIMENSION AS REQUIRED TO ACCOUNT FOR THE THICKNESS OF INTERNAL LINING WHERE APPLICABLE.

11 INSULATION AND FLEXIBLE DUCT SHALL COMPLY WITH STATE FIRE MARSHALL CRITERIA AND SHALL NOT EXCEED FLAME SPREAD OF 25 AND SMOKE DEVELOPED OF 50 PER ASTM-84, NFPA-223, AND UL 723.

12 INSULATE PIPING AND DUCTWORK IN ACCORDANCE TO THE GOVERNING CODES.

13 COMMISSION AND START-UP THE MECHANICAL SYSTEMS TO ASSURE A COMPLETE AND OPERATIONAL HVAC SYSTEM IN ACCORDANCE WITH ASHRAE AND NEBB.

14 ALL SQUARE ELBOWS IN SUPPLY DUCTWORK SHALL HAVE TURNING VANES. PROVIDE MANUAL VOLUME DAMPER AT EACH BRANCH DUCT TAKE-OFF SERVING EACH AIR TERMINAL DEVICE. PROVIDE BALANCING DAMPERS FOR EACH MAIN DUCT TAKE-OFF IN ACCORDANCE TO SMACNA IN ORDER TO ASSURE A COMPLETELY BALANCED SYSTEM.

15 CONTROLS AND SWITCHES INTENDED TO BE USED BY THE OCCUPANT OF A ROOM OR AREA TO CONTROL COOLING, HEATING AND VENTILATING EQUIPMENT SHALL BE MOUNTED AT THE HEIGHTS GIVEN BY SECTION 11B-308.1 OF THE 2022 CBC. NOTIFY THE ARCHITECT IMMEDIATELY IF THE MOUNTING HEIGHTS REQUIRED BY THE 2022 CBC CANNOT BE OBTAINED AT THE LOCATION WHERE THE CONTROL DEVICE IS SHOWN ON THE MECHANICAL FLOOR PLANS.

16 DUCT SMOKE DETECTORS WHEN NOT PROVIDED PRE-INSTALLED BY THE EQUIPMENT MANUFACTURER SHALL BE INSTALLED IN THE SUPPLY AIR DUCT OF AIR-MOVING SYSTEMS SUPPLYING AIR IN EXCESS OF 2000 CFM. DETECTORS SHALL BE LOCATED BETWEEN THE SUPPLY AIR DUCT CONNECTION AT THE EQUIPMENT AND THE FIRST BRANCH DUCT OR DIFFUSER. WHERE FIRE-DETECTION OR ALARM SYSTEMS ARE PROVIDED FOR THE BUILDING, ALL SMOKE DETECTORS SHALL BE SUPERVISED BY SUCH SYSTEMS IN AN APPROVED MANNER, AND INSTALLED IN ACCORDANCE WITH NFPA 72 AND THE CALIFORNIA BUILDING AND FIRE CODES.

17 ALL EQUIPMENT SHALL BE LABELED AS TO THE SPACE THEY ARE SERVING.

18 HABITABLE SPACE SHALL BE PROVIDED WITH A HEATING SYSTEM CAPABLE OF MAINTAINING A MINIMUM INDOOR TEMPERATURE OF 68°F AT A POINT 3 FEET ABOVE THE FLOOR PER 2022 CBC 1203.

19 MATERIALS EXPOSED WITHIN ANY SPACE BEING USED AS AN AIR PLENUM SHALL BE NON COMBUSTIBLE OR SHALL HAVE A FLAME SPREAD INDEX NOT GREATER THAN 25 AND A SMOKE DEVELOPED INDEX NOT GREATER THAN 50, WHEN TESTED AS A COMPOSITE PRODUCT IN ACCORDANCE WITH ONE OF THE FOLLOWING TEST METHODS: NFPA 255, METHOD OF TEST OF SURFACE BURNING CHARACTERISTICS OF BUILDING MATERIALS, ASTM E84, SURFACE BURNING CHARACTERISTICS OF BUILDING MATERIALS, OR UL 723, TEST FOR SURFACE BURNING CHARACTERISTIC OF BUILDING MATERIALS.

20 ANY MECHANICAL EQUIPMENT THAT PROVIDES POWER TO A ENERGIZED ACCESSORY MUST BE PROVIDED WITH A NAMEPLATE THAT REFLECTS THE ELECTRICAL CHARACTERISTICS OF THE COMPLETE SYSTEM AS INSTALLED WITH THE ENERGIZED ACCESSORY. NO EXCEPTIONS.

MECHANICAL TITLE 24 NOTES

1 HVAC EQUIPMENT AND APPLIANCES SHALL MEET THE LATEST REQUIREMENTS OF THE CA ENERGY EFFICIENCY STANDARDS.

2 HVAC SYSTEMS SHALL MEET THE LATEST CONTROL REQUIREMENTS OF THE CA ENERGY EFFICIENCY STANDARDS.

3 DOORS AND WINDOWS SHALL MEET MINIMUM INFILTRATION REQUIREMENTS OF THE CA ENERGY EFFICIENCY STANDARDS.

4 ALL WORK SHALL BE IN ACCORDANCE WITH CITY & COUNTY CODES, CALIFORNIA ENERGY CONSERVATION STANDARDS, TITLE - 24, AND ALL OTHER APPLICABLE CODES.

5 ALL PIPING AND DUCTWORK SHALL BE INSULATED CONSISTENT WITH THE LATEST REQUIREMENTS OF THE CA ENERGY EFFICIENCY STANDARDS.

rrm design group
rrmdesign.com | (805) 543-1794
3765 S. Higuera, San Luis Obispo, CA 93401

THE INCLUDED DRAWINGS, SPECIFICATIONS, IDEAS, DESIGNS AND ARRANGEMENTS REPRESENTED THEREBY ARE AND SHALL REMAIN THE PROPERTY OF RRM DESIGN GROUP AND NO PART THEREOF SHALL BE COPIED, DISCLOSED TO OTHERS OR USED IN CONNECTION WITH ANY WORK OR PROJECT OTHER THAN THE SPECIFIED PROJECT FOR WHICH THEY HAVE BEEN PREPARED AND DEVELOPED WITHOUT THE WRITTEN CONSENT OF RRM DESIGN GROUP. VISUAL CONTACT WITH THESE DRAWINGS OR SPECIFICATIONS SHALL CONSTITUTE CONCLUSIVE EVIDENCE OF ACCEPTANCE OF THESE RESTRICTIONS. SUBMITTAL OF THESE DOCUMENTS FOR PUBLIC AGENCY REVIEW SHALL NOT BE CONSIDERED A WAIVER OF RRM DESIGN GROUP'S RIGHTS.
RRM DESIGN GROUP COPYRIGHT 2021
RRM IS A CALIFORNIA CORPORATION

REGISTERED PROFESSIONAL ENGINEER
BRIAN P. STARRETT
M 34068
EXP. 6/30/24
MECHANICAL
STATE OF CALIFORNIA

CONSULTANT

3C | ENGINEERING
SMARTER BUILDINGS BY DESIGN
805. 540. 3363 WWW.3CENG.COM
1500 PALM ST. SAN LUIS OBISPO, CA 93401

BY 3C Engineering, Inc., ALL COMMON LAW COPYRIGHT AND OTHER PROPERTY RIGHTS RESERVE THIS DOCUMENT AS AN ORIGINAL AND UNPUBLISHED WORK PRODUCT. THIS WORK SHALL NOT BE DUPLICATED, COPIED, DISCLOSED OR USED IN CONNECTION WITH ANY WORK OR PROJECT OTHER THAN THE SPECIFIC PROJECT FOR WHICH IT AS BEEN PREPARED, NOR SHALL IT BE ASSIGNED TO ANY THIRD PARTY WITHOUT FIRST OBTAINING THE EXPRESS WRITTEN CONSENT OF VISUAL CONTACT. THIS DOCUMENT SHALL CONSTITUTE CONCLUSIVE EVIDENCE OF ACCEPTANCE OF THESE RESTRICTIONS.

AGENCY

FOURTH ST COMMUNITY CENTER AND PARK
HENDERSON AVE., PORTERVILLE, CA 93257
MECHANICAL GENERAL

100% CONSTRUCTION DOCUMENTS

NO.	REVISION	DATE
1	PLAN CHECK REVISION 1	5/17/24

PROJECT MANAGER DS
DRAWN BY BS | **CHECKED BY** BS
DATE 2024.05.17
PROJECT NUMBER 2883-01-RC22
SHEET M-000

S:\Shared\Jobs\ENG Projects\Porterville Community Center\Engineering\Porterville Community Center Mechanical Lead.dwg khanjiev May 15,2024-1:32pm

PACKAGED HEAT PUMP UNIT SCHEDULE

TAG	MAKE	MODEL	NOM CAPACITY TONS	DUCT CONFIGURATION	REFRIGERANT	COOLING STAGES	ELECTRICAL DATA			AHRI PERFORMANCE						AUXILIARY ELECTRIC HEAT		CONDENSATE CONNECTION SIZE	EVAPORATOR FAN DATA								MERV 13 FILTER QUANTITY AND SIZE	VENTILATION AIR BALANCE CFM			OPERATING WEIGHT LBS	REMARKS SEE BELOW	INSTALLATION DETAIL
										COOLING			HEATING																				
							POWER V/ϕ/HZ	MCA	FUSE SIZE	BTUH	IEER [SEER]	EER	BTUH AT 47°F	BTUH AT 17°F	COP [HSPF]	KW	BTUH		DRIVE	MIN CFM	CFM	ESP	WATTS [HP]	BHP	FAN SPEED	CONTROL		FIXED OAI	MINIMUM OAI	DCV MAX OAI			
PHP 1	TRANE	WHC074	6	VERTICAL	R-410A	2	460/3/60	33	35	78000	15.5	12.10	75000	40000	3.50	9	30,708	1-3/4"	DIRECT	1585	2400	0.60"	[2.75]	0.43	912	VARIABLE	(4)20X25X2	NA	225	500	1250	1,2,C1,C2,C3	1/M-003
PHP 2	TRANE	WSC036	3	VERTICAL	R-410A	1	460/3/60	20	20	39000	[14.3]	12.10	36000	20600	[8.0]	6	20,472	1-3/4"	DIRECT	NA	1200	0.65"	[0.75]	0.34	SPEED SET 3	CONSTANT	(2)20X35X2	200	NA	NA	825	3,C1	1/M-003
PHP 3	TRANE	WSC102	8.5	HORIZONTAL	R-410A	2	460/3/60	34	40	100000	14.1	11	92000	48500	3.40	9	30,708	1-3/4"	DIRECT	2265	3400	0.60"	[2]	0.99	1177	VARIABLE	(4)20X25X2	300	NA	NA	1335	1,4,C1,C4	1/M-003
PHP 4A	TRANE	WHJ300	25	HORIZONTAL	R-410A	4	460/3/60	61	80	246650	16.1	10.4	253880	157930	3.5	NA	NA	1"	DIRECT	6600	10000	0.70"	[4.6]	3.75	1490	VARIABLE	(4)20X24X2 (4)20X30X2	NA	700	2225	2785	5,6,7,C1,C2, C4	1/M-003
PHP 4B	TRANE	WHJ300	25	HORIZONTAL	R-410A	4	460/3/60	61	80	246650	16.1	10.4	253880	157930	3.5	NA	NA	1"	DIRECT	6600	10000	0.70"	[4.6]	3.75	1490	VARIABLE	(4)20X24X2 (4)20X30X2	NA	700	2225	2785	5,6,7,C1,C2, C4	1/M-003

GENERAL NOTES APPLICABLE TO ALL UNITS:
A. DISCONNECT PROVIDED BY ELECTRICAL CONTRACTOR.
B. PACKAGED HEAT PUMP UNITS THAT PROVIDE POWER FROM THE UNIT TO THE POWER EXHAUST OR ANY OTHER ENERGIZED ACCESSORY SHALL BE PROVIDED WITH A FACTORY NAMEPLATE THAT REFLECTS THE ELECTRICAL CHARACTERISTICS OF THE COMPLETE SYSTEM. NO EXCEPTIONS.

UNIT SPECIFIC NOTES:
1. PROVIDE WITH MANUFACTURER'S MULTI-SPEED INDOOR FAN SYSTEM.
2. PROVIDE WITH MICROMETL MODEL CRBV-PR20BHA-1412-P60 STRUCTURALLY CALCULATED ISOLATED KNOCKDOWN CURB. 14" BASE HEIGHT.
3. PROVIDE WITH MICROMETL MODEL CRBV-PR20AHA-1412-P10 STRUCTURALLY CALCULATED ISOLATED KNOCKDOWN CURB. 14" BASE HEIGHT.
4. PROVIDE WITH MICROMETL MODEL CRBV-PR20BHA-1412-050 STRUCTURALLY CALCULATED ISOLATED KNOCKDOWN CURB. 14" BASE HEIGHT.
5. PROVIDE WITH MICROMETL MODEL CRBV-PR20DHA-1412-P20 STRUCTURALLY CALCULATED ISOLATED KNOCKDOWN CURB. 14" BASE HEIGHT.
6. PROVIDE WITH MANUFACTURER'S MODEL FIAECON303 DRY BULB HORIZONTAL ECONOMIZER.
7. PROVIDE WITH MANUFACTURER'S MODEL FIAOPTN002 FRESH AIR OPTIONS MODULE TO BE USED WITH HORIZONTAL ECONOMIZER.

CONTROL NOTES:
C1. PROVIDE WITH HONEYWELL MODEL TH8321WF1001 VISION PRO WI-FI CAPABLE PROGRAMMABLE THERMOSTAT.
C2. PROVIDE WITH HONEYWELL MODEL C7232A WALL MOUNTED CO2 SENSOR WITH DISPLAY. CO2 SENSOR SHALL OVERRIDE ECONOMIZER MINIMUM OUTSIDE AIR POSITION WHEN CO2 LEVELS EXCEED 1000 PPM.
C3. UNIT SHALL HAVE AUTOMATIC SHUT DOWN UPON SMOKE DETECTION PER THE 2022 CMC SECTION 609. REFER TO DETAIL 2/M-003
C4. AUTOMATIC SHUT DOWN UPON SMOKE DETECTION NOT REQUIRED PER THE 2022 CMC SECTION 609, EXCEPTION 2.

COMBINATION ECONOMIZER AND POWER EXHAUST SCHEDULE

TAG	MATCHING UNIT TAG	MAKE	MODEL	ELECTRICAL DATA			FAN DATA					WEIGHT LBS	REMARKS SEE BELOW	INSTALLATION DETAIL
				POWER V/ϕ/HZ	FLA	POWERED BY ASSOCIATED UNIT	CFM	ESP	WATTS [HP]	TYPE	MODULATING			
PE 1	PHP 1	MICROMETL	PECD-PRCCECB-DYDB-4L1	460/3/60	2.8	NO	2400	0.7	[1.0]	CENTRIFUGAL	YES	285	C1,C2,C3	NA
PE 2	PHP 2	MICROMETL	PECD-PRC0BCB-DYDB-4LH	460/3/60	1.5	NO	1200	0.7	[0.5]	CENTRIFUGAL	YES	210	C1,C2,C3	NA
PE 3	PHP 3	MICROMETL	PECE-PRCCECB-DYDB-4L2R	460/3/60	4.5	NO	3400	0.7	[2.0]	CENTRIFUGAL	YES	370	C1,C2,C3	NA

GENERAL NOTES APPLICABLE TO ALL UNITS:
A. DISCONNECT PROVIDED BY ELECTRICAL CONTRACTOR.
B. ECONOMIZER SHALL MEET TITLE 24 MANDATORY REQUIREMENTS FOR DAMPER LEAKAGE, FAULT DETECTION AND DIAGNOSTIC CONTROLS.

CONTROL NOTES:
C1. ECONOMIZER SHALL BE DRY BULB CONTROLLED.
C2. ECONOMIZER SHALL BE PROVIDED WITH HONEYWELL JADE CONTROLLER AND BELIMO NON COMMUNICATING ACTUATORS.
C3. POWER EXHAUST SHALL MODULATE TO MAINTAIN 0.05" WC IN THE SPACE SERVED BY THE MATCHING UNIT.

DUCTLESS SPLIT SYSTEM HEAT PUMP SCHEDULE

TAG	MAKE	NOM TONS	REFRIGERANT	ARI PERFORMANCE						INDOOR UNIT							OUTDOOR UNIT						REMARKS SEE BELOW
				COOLING BTUH	HEATING BTUH AT 47°F	HEATING BTUH AT 17°F	SEER [SEER2]	EER [EER2]	HSPF [HSPF2]	MODEL	INSTALLATION TYPE	POWERED BY OUTDOOR UNIT	CFM	WATTS [HP]	OPERATING WEIGHT LBS	INSTALLATION DETAIL	MODEL	POWER V/ϕ/HZ	MCA	MOCP	OPERATING WEIGHT LBS	INSTALLATION DETAIL	
DS 1	MITSUBISHI	3.0	R-410A	36,000	NA	NA	[19.4]	[10.8]	NA	TPKA0A0361	HIGHWALL	YES	920	56	50	5/M-004	TRUYA0361	208/1/60	25	30	215	6/M-003	C1

GENERAL NOTES APPLICABLE TO ALL UNITS:
A. DISCONNECT PROVIDED BY ELECTRICAL CONTRACTOR.
B. UNIT SHALL BE CONFIGURED FOR COOLING ONLY.
C. SIZE REFRIGERATION LINES PER THE MANUFACTURERS REQUIREMENTS FOR TOTAL DEVELOPED LINE LENGTH.
D. PROVIDE WITH CONDENSATE PUMP. PUMP SHALL BE INTERNALLY MOUNTED WITHIN THE INDOOR UNIT AND WIRED TO THE TERMINAL STRIP. NO EXPOSED INSTALLATIONS ALLOWED.

CONTROL NOTES:
C1. PROVIDE WITH MANUFACTURER'S 7-DAY PROGRAMMABLE TAR-40MAAU WIRED CONTROLLER.

FAN COIL UNIT SCHEDULE

TAG	MATCHING UNIT TAG	MAKE	MODEL	NOM TONS	REFRIGERANT	FAN				OAI CFM	ELECTRICAL DATA			AHRI PERFORMANCE						MERV 13 FILTER QUANTITY AND SIZE	OPERATING WEIGHT LBS	REMARKS SEE BELOW	INSTALLATION DETAIL
						CFM	SPEED	ESP	WATTS [BHP]		POWER V/ϕ/HZ	MCA	MOCP	COOLING BTUH	SEER [SEER2]	EER [EER2]	HEATING BTUH AT 47°F	HEATING BTUH AT 17°F	HSPF [HSPF 2]				
FC 1	HPC 1	MITSUBISHI	TPVA0A0421AA70A	3.5	R-410A	1485	HIGH	0.8	430	150	NOTE 1			42000	[18.7]	[10.1]	48000	28400	[8.8]	(1)24x20x2	175	1,2,3,C1,C2	4/M-004
FC 2	HPC 2	MITSUBISHI	TPVFYP054AM141A	4.5	R-410A	1485	HIGH	0.8	430	175	208-230/1/60	5.63	15	48000	16.5	11.3	54000	35000	11.0	(1)24x20x2	195	1,2,3,C1,C3	9/M-005

GENERAL NOTES APPLICABLE TO ALL UNITS:
A. DISCONNECT PROVIDED BY ELECTRICAL CONTRACTOR.

UNIT SPECIFIC NOTES:
1. INDOOR UNIT IS POWERED BY THE OUTDOOR UNIT.
2. PROVIDE PROVENT FILTER BOX MODEL # FLTPVFY-7585-03.
3. PROVIDE WITH RECTORSEAL SAFE-T-SWITCH CONDENSATE SAFETY SWITCH INSTALLED IN THE COOLING COIL OVERFLOW DRAIN CONNECTION. SWITCH SHALL BE WIRED TO THE FAN COIL CONTROLS TO SHUT THE UNIT DOWN WHEN CONDENSATE OVERFLOW IS DETECTED.

CONTROL NOTES:
C1. PROVIDE WITH MANUFACTURER'S 7-DAY PROGRAMMABLE TAR-40MAAU WIRED CONTROLLER.
C2. UNIT TO OPERATE IN OCCUPIED STANDBY MODE WHEN ALL OF THE ROOMS THE SYSTEM IS SERVING ARE UNOCCUPIED FOR MORE THAN 5 MINUTES. IN OCCUPIED STANDBY MODE THE COOLING TEMPERATURE SETPOINT IS TO AUTOMATICALLY SETUP BY 2°F AND THE HEATING TEMPERATURE SETPOINT IS TO AUTOMATICALLY SETBACK BY 2°F OR MORE. OCCUPIED STANDBY MODE SHALL BE CONTROLLED BY OCCUPANCY SENSOR, PROVIDED BY ELECTRICAL, FOR THE SPACES SERVED.
C3. PROVIDE MANUFACTURER'S PAC-USSEN002-FM-1 SPACE TEMPERATURE SENSOR AS LOCATED ON PLANS AND TIE INTO SYSTEM TO OPERATE BASED ON THE SENSOR'S ROOM TEMPERATURE OUTPUT.

HEAT PUMP CONDENSING UNIT SCHEDULE

TAG	MATCHING UNIT TAG	MAKE	MODEL	NOM TONS	REFRIGERANT	ELECTRICAL DATA			AHRI PERFORMANCE						PIPING SIZE		OPERATING WEIGHT LBS	REMARKS SEE BELOW	INSTALLATION DETAIL
						POWER V/ϕ/HZ	MCA	MOCP	COOLING BTUH	SEER [SEER2]	EER [EER2]	HEATING BTUH AT 47°F	HEATING BTUH AT 17°F	HSPF [HSPF 2]	LIQUID	SUCTION			
HPC 1	FC 1	MITSUBISHI	TRUZA0421KA70BA	3.5	R-410A	208/1/60	25	30	42000	[18.7]	[10.1]	48000	28400	[8.8]	NOTE B	NOTE B	215	NA	6/M-003
HPC 5	FC 5	MITSUBISHI	TUMYP0481AK43	4.5	R-410A	208/1/60	29	45	48000	16.5	11.3	54000	35000	11.0	NOTE B	NOTE B	275	NA	6/M-003

GENERAL NOTES APPLICABLE TO ALL UNITS:
A. DISCONNECT PROVIDED BY ELECTRICAL CONTRACTOR.
B. SIZE REFRIGERATION LINES PER MANUFACTURERS REQUIREMENTS FOR TOTAL DEVELOPED LINE LENGTH.

rrm design group
rrmdesign.com | (805) 543-1794
3765 S. Higuera, San Luis Obispo, CA 93401

THE INCLUDED DRAWINGS, SPECIFICATIONS, IDEAS, DESIGNS AND ARRANGEMENTS REPRESENTED THEREBY ARE AND SHALL REMAIN THE PROPERTY OF RRM DESIGN GROUP AND NO PART THEREOF SHALL BE COPIED, DISCLOSED TO OTHERS OR USED IN CONNECTION WITH ANY WORK OR PROJECT OTHER THAN THE SPECIFIED PROJECT FOR WHICH THEY HAVE BEEN PREPARED AND DEVELOPED WITHOUT THE WRITTEN CONSENT OF RRM DESIGN GROUP. VISUAL CONTACT WITH THESE DRAWINGS OR SPECIFICATIONS SHALL CONSTITUTE CONCLUSIVE EVIDENCE OF ACCEPTANCE OF THESE RESTRICTIONS. SUBMITTAL OF THESE DOCUMENTS FOR PUBLIC AGENCY REVIEW SHALL NOT BE CONSIDERED A WAIVER OF RRM DESIGN GROUP'S RIGHTS.
RRM DESIGN GROUP COPYRIGHT 2021
RRM IS A CALIFORNIA CORPORATION

REGISTERED PROFESSIONAL ENGINEER BRIAN P. STARRETT M 34068 EXP. 6/30/24 MECHANICAL STATE OF CALIFORNIA

CONSULTANT

3C | ENGINEERING
SMARTER BUILDINGS BY DESIGN
805. 540. 3363 WWW.3CENG.COM
1500 PALM ST. SAN LUIS OBISPO, CA 93401

BY 3C Engineering, Inc., ALL COMMON LAW COPYRIGHT AND OTHER PROPERTY RIGHTS RESERVE THIS DOCUMENT AS AN ORIGINAL AND UNPUBLISHED WORK PRODUCT. THIS WORK SHALL NOT BE DUPLICATED, COPIED, DISCLOSED OR USED IN CONNECTION WITH ANY WORK OR PROJECT OTHER THAN THE SPECIFIC PROJECT FOR WHICH IT AS BEEN PREPARED, NOR SHALL IT BE ASSIGNED TO ANY THIRD PARTY WITHOUT FIRST OBTAINING THE EXPRESS WRITTEN CONSENT OF VISUAL CONTACT. THIS DOCUMENT SHALL CONSTITUTE CONCLUSIVE EVIDENCE OF ACCEPTANCE OF THESE RESTRICTIONS.

AGENCY

FOURTH ST COMMUNITY CENTER AND PARK
HENDERSON AVE., PORTERVILLE, CA 93257

MECHANICAL SCHEDULES

NO.	REVISION	DATE
1	PLAN CHECK REVISION 1	5/17/24

PROJECT MANAGER: DS
DRAWN BY: BS
CHECKED BY: BS
DATE: 2024.05.17
PROJECT NUMBER: 2883-01-RC22
SHEET: M-001

100% CONSTRUCTION DOCUMENTS

COMMERCIAL GRILLE, REGISTER, DIFFUSER, LOUVER SCHEDULE

FD = FIRE DAMPER
FSD = FIRE/SMOKE DAMPER
OAI = OUTSIDE AIR INTAKE
X"Ø = INLET SIZE (IF APPLICABLE)

FD (S1) 400 / 12x12

- 400 — CFM
- 12x12 — NECK SIZE (length x width or length x height)
- (S1) — MARK: S = SUPPLY; R = RETURN; E = EXHAUST; T = TRANSFER; L = LOUVER; O = OUTSIDE AIR
- DIFFUSER, GRILLE, LOUVER

CEILING SUPPLY DEFLECTION LEGEND (EXCEPT FOR 4-WAY DEFLECTION, SHADING INDICATES ACTIVE SECTION OF DIFFUSER)

4-WAY | 3-WAY | 2-WAY CORNER | 2-WAY OPPOSITE | 1-WAY

TAG	TYPE	MAKE	MODEL	BORDER TYPE		CONSTRUCTION	FINISH	IMAGE	REMARKS	INSTALLATION DETAIL
				GYP BOARD CEILING OR WALL	LAY-IN CEILING					
S1	CEILING SUPPLY	TITUS	TDC	1	3	STEEL	WHITE		MECHANICAL CONTRACTOR SHALL COORDINATE WITH THE GENERAL CONTRACTOR AND FRAMING CONTRACTOR TO INSURE OPENINGS IN HARD CEILINGS AND WALLS ARE CORRECTLY SIZED TO ACCOMMODATE THE SPECIFIED BORDER TYPE. NO EXCEPTIONS	6/M-004
S2	SIDEWALL MOUNTED SUPPLY DOUBLE DEFLECTION	TITUS	300RS	1	NA	STEEL	WHITE		MECHANICAL CONTRACTOR SHALL COORDINATE WITH THE GENERAL CONTRACTOR AND FRAMING CONTRACTOR TO INSURE OPENINGS IN HARD CEILINGS AND WALLS ARE CORRECTLY SIZED TO ACCOMMODATE THE SPECIFIED BORDER TYPE. NO EXCEPTIONS	NA
S3	EXPOSED DUCT MOUNTED SUPPLY	TITUS	S301FS	1-3/8" FLANGE		ALUMINUM	CLEAR ANODIZED		PROVIDE WITH OPTIONAL ASD-AIR SCOOP DEVICE	9/M-004
E1 R1 T1	CEILING OR SIDEWALL RETURN, EXHAUST AND TRANSFER	TITUS	350RL	1	3	STEEL	WHITE		MECHANICAL CONTRACTOR SHALL COORDINATE WITH THE GENERAL CONTRACTOR AND FRAMING CONTRACTOR TO INSURE OPENINGS IN HARD CEILINGS AND WALLS ARE CORRECTLY SIZED TO ACCOMMODATE THE SPECIFIED BORDER TYPE. NO EXCEPTIONS	6/M-004
R2	CEILING OR SIDEWALL RETURN	TITUS	30R	1	3	HEAVY DUTY STEEL	WHITE		MECHANICAL CONTRACTOR SHALL COORDINATE WITH THE GENERAL CONTRACTOR AND FRAMING CONTRACTOR TO INSURE OPENINGS IN HARD CEILINGS AND WALLS ARE CORRECTLY SIZED TO ACCOMMODATE THE SPECIFIED BORDER TYPE. NO EXCEPTIONS	NA
E2	CEILING EXHAUST	TITUS	SG-SD	3/16" STEEL FACE PLATE		STEEL	WHITE		MECHANICAL CONTRACTOR SHALL COORDINATE WITH THE GENERAL CONTRACTOR AND FRAMING CONTRACTOR TO INSURE OPENINGS IN HARD CEILINGS AND WALLS ARE CORRECTLY SIZED TO ACCOMMODATE THE SPECIFIED BORDER TYPE. NO EXCEPTIONS	NA

EXHAUST FAN SCHEDULE

TAG	MAKE	MODEL	TYPE	FAN					MOTOR		ACCESSORIES					OPERATING WEIGHT LBS	REMARKS SEE BELOW	INSTALLATION DETAIL
				CFM	ESP	RPM	SONES	DRIVE	POWER V/Ø/HZ	WATTS [HP]	BIRD GUARD	BACKDRAFT DAMPER	ROOF CURB	ROOF JACK	WALL CAP			
EF 1	GREENHECK	CSP-A700	IN-LINE	400	0.5	815	2.5	DIRECT	115/1/60	368	NO	YES	NO	NO	NO	40	C1	7/M-004
EF 2	GREENHECK	CUBE-100HP-4	UPBLAST	475	0.5	1515	7.6	BELT	115/1/60	[0.13]	YES	YES	YES	NO	NO	85	C2	7/M-003
EF 3	GREENHECK	CUBE-100HP-4	UPBLAST	475	0.5	1515	7.6	BELT	115/1/60	[0.13]	YES	YES	YES	NO	NO	85	C2	7/M-003
EF 4	GREENHECK	SP-A125	CEILING	125	0.125	1087	0.4	DIRECT	115/1/60	21	NO	YES	NO	YES	NO	20	C3	8/M-004

GENERAL NOTES APPLICABLE TO ALL UNITS:
A. DISCONNECT PROVIDED BY ELECTRICAL CONTRACTOR.
B. FAN SPEED CONTROLLERS SHALL BE PROVIDED FROM THE FACTORY WITH THE SPEED CONTROLLER INTERNALLY MOUNTED WITHIN THE FAN HOUSING AND WIRED.

CONTROL NOTES:
C1. INTERLOCK FAN WITH ROOM LIGHTING CONTROLS SO THAT THE FAN ENERGIZES WHEN THE ROOM LIGHTS IN EITHER ROOM ARE TURNED ON. PROVIDE 10 MINUTE TIMED DELAY OFF. INTERLOCKS AND TIME DELAY BY ELECTRICAL.
C2. CONTROL WITH SINGLE POLE SWITCH, REFER TO FLOOR PLAN FOR LOCATION. SWITCH PROVIDED AND INSTALLED BY ELECTRICAL.
C3. INTERLOCK FAN WITH ROOM LIGHTING CONTROLS SO THAT THE FAN ENERGIZES WHEN THE ROOM LIGHTS ARE TURNED ON. PROVIDE 10 MINUTE TIMED DELAY OFF. INTERLOCK AND TIME DELAY BY ELECTRICAL.

EXHAUST / INTAKE / RELIEF HOOD SCHEDULE

TAG	MAKE	MODEL	THROAT SIZE INCHES	THROAT AREA IN FT²	CFM	SP	THROAT VELOCITY FPM	ACCESSORIES			WEIGHT LBS	REMARKS SEE BELOW	INSTALLATION DETAIL
								BIRD GUARD	BACKDRAFT DAMPER	ROOF CURB			
EH 1	GREENHECK	GRSR-10	10	0.57	400	0.05	702	YES	NO	YES	30	NA	9/M-003
IH 1	GREENHECK	GRSI-8	8	0.37	150	0.05	405	YES	YES	YES	30	NA	9/M-003
IH 2	GREENHECK	GRSI-8	8	0.37	175	0.05	473	YES	YES	YES	30	NA	9/M-003
RH 1	GREENHECK	FRG	44X42	12.83	5000	0.05	390	YES	YES	YES	250	NA	8/M-003
RH 2	GREENHECK	FRG	44X42	12.83	5000	0.05	390	YES	YES	YES	250	NA	8/M-003
RH 3	GREENHECK	FRG	44X42	12.83	5000	0.05	390	YES	YES	YES	250	NA	8/M-003
RH 4	GREENHECK	FRG	44X42	12.83	5000	0.05	390	YES	YES	YES	250	NA	8/M-003

rrm design group
rrmdesign.com | (805) 543-1794
3765 S. Higuera, San Luis Obispo, CA 93401

THE INCLUDED DRAWINGS, SPECIFICATIONS, IDEAS, DESIGNS AND ARRANGEMENTS REPRESENTED THEREBY ARE AND SHALL REMAIN THE PROPERTY OF RRM DESIGN GROUP AND NO PART THEREOF SHALL BE COPIED, DISCLOSED TO OTHERS OR USED IN CONNECTION WITH ANY WORK OR PROJECT OTHER THAN THE SPECIFIC PROJECT FOR WHICH THEY HAVE BEEN PREPARED AND DEVELOPED WITHOUT THE WRITTEN CONSENT OF RRM DESIGN GROUP. VISUAL CONTACT WITH THESE DRAWINGS OR SPECIFICATIONS SHALL CONSTITUTE CONCLUSIVE EVIDENCE OF ACCEPTANCE OF THESE RESTRICTIONS. SUBMITTAL OF THESE DOCUMENTS FOR AGENCY REVIEW SHALL NOTBE CONSIDERED A WAIVER OF RRM DESIGN GROUP'S RIGHTS.

RRM DESIGN GROUP COPYRIGHT 2021
RRM IS A CALIFORNIA CORPORATION

REGISTERED PROFESSIONAL ENGINEER
BRIAN P. STARRETT
M 34068
EXP. 6/30/24
MECHANICAL
STATE OF CALIFORNIA

CONSULTANT

3C | ENGINEERING
SMARTER BUILDINGS BY DESIGN
✆ 805. 540. 3363 ⊕ WWW.3CENG.COM
1000 PALM ST. SAN LUIS OBISPO, CA 93401

BY 3C Engineering, Inc., ALL COMMON LAW COPYRIGHT AND OTHER PROPERTY RIGHTS RESERVE THIS DOCUMENT AS AN ORIGINAL AND UNPUBLISHED WORK PRODUCT. THIS WORK SHALL NOT BE DUPLICATED, COPIED, DISCLOSED OR USED IN CONNECTION WITH ANY WORK OR PROJECT OTHER THAN THE SPECIFIC PROJECT FOR WHICH IT AS BEEN PREPARED. NOR SHALL IT BE ASSIGNED TO ANY THIRD PARTY WITHOUT FIRST OBTAINING THE EXPRESS WRITTEN CONSENT OF VISUAL CONTACT. THIS DOCUMENT SHALL CONSTITUTE CONCLUSIVE EVIDENCE OF ACCEPTANCE OF THESE RESTRICTIONS.

AGENCY

100% CONSTRUCTION DOCUMENTS

FOURTH ST COMMUNITY CENTER AND PARK
HENDERSON AVE., PORTERVILLE, CA 93257

MECHANICAL SCHEDULES

NO.	REVISION	DATE
1	PLAN CHECK REVISION 1	5/17/24

PROJECT MANAGER DS
DRAWN BY BS
CHECKED BY BS
DATE 2024.05.17
PROJECT NUMBER 2883-01-RC22
SHEET M-002

S:\SharedJobs\ENG Projects\Porterville Community Center\Engineering\Porterville Community Center |Mechanical Lead.dwg khanijev May 15,2024-1:32pm

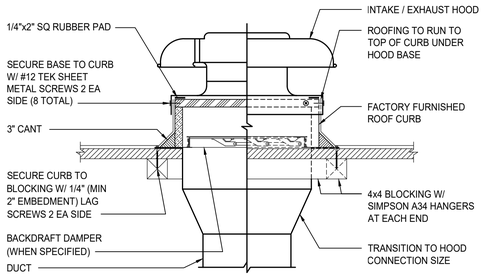

9 INTAKE / EXHAUST HOOD MOUNTING
NTS

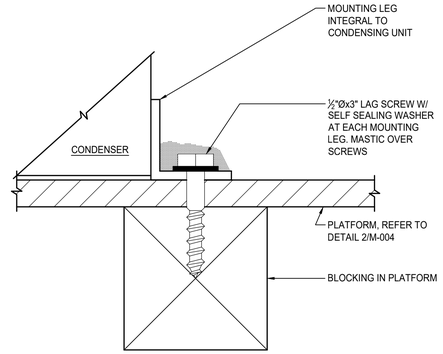

6 CONDENSING UNIT ANCHORAGE - PLATFORM
NTS

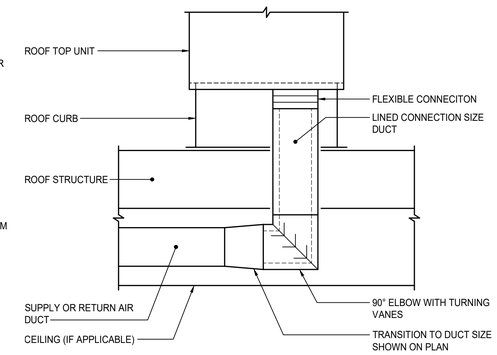

3 DUCT TAKE-OFF AT ROOF MOUNTED UNIT
NTS

HOLD DOWN CLIPS SHALL BE CENTERED OVER THE SPRING ISOLATOR. PROVIDE (2) CLIPS PER LONG DIMENSION. CLIPS ARE NOT REQUIRED ON THE SHORT DIMENSION. REFER TO 9/M0.3 FOR ADDITIONAL DIMENSIONAL DATA. CURB SHALL BE INSTALLED PER THE PLANS AND IN STRICT ACCORDANCE WITH THE MANUFACTURERS INSTALLATION INSTRUCTIONS.

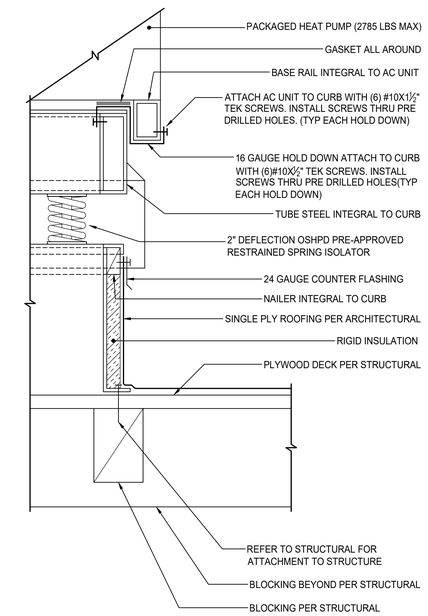

1 PACKAGED HEAT PUMP SPRING ISOLATION CURB
NTS

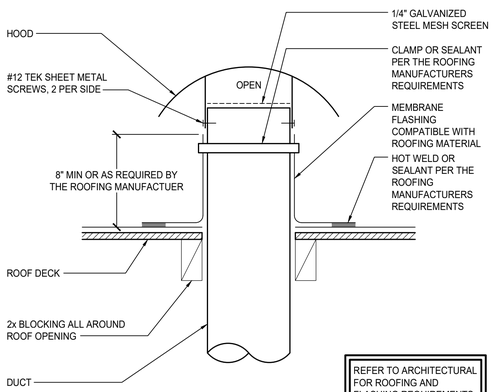

REFER TO ARCHITECTURAL FOR ROOFING AND FLASHING REQUIREMENTS

10 ROOF CAP
NTS

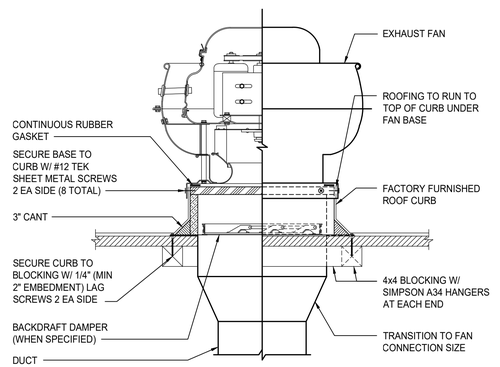

7 EXHAUST FAN MOUNTING
NTS

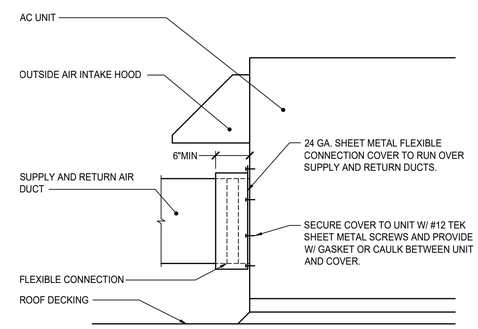

4 FLEXIBLE CONNECTION COVER
NTS

REFER TO ARCHITECTURAL FOR ROOFING AND FLASHING REQUIREMENTS

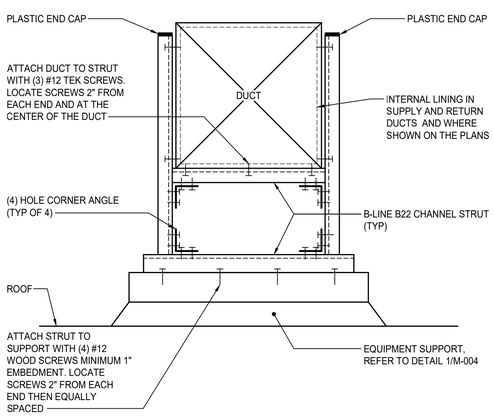

11 ROOF DUCT SUPPORT
NTS

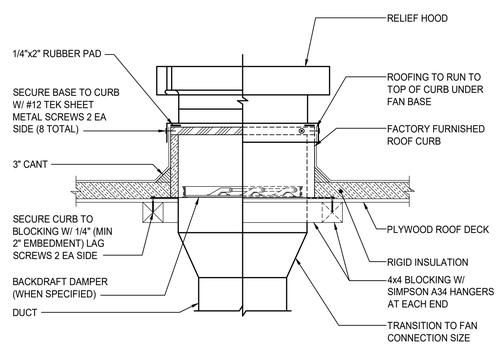

8 RELIEF HOOD MOUNTING
NTS

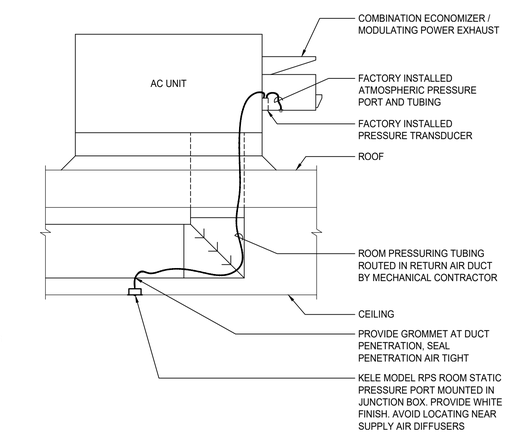

5 MODULATING POWER EXHAUST ROOM PRESSURE PORT
NTS

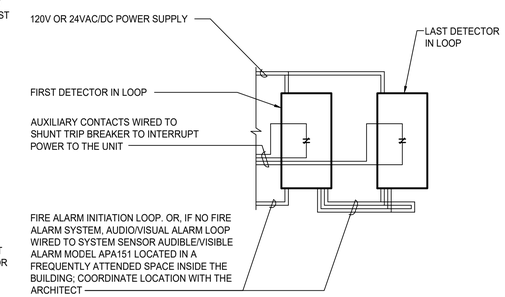

DUCT SMOKE DETECTOR: SYSTEM SENSOR MODEL D4120 WHEN LOCATED INSIDE THE BUILDING, MODEL D4120W WHEN LOCATED OUTSIDE OF THE BUILDING. UL LISTED #S911, FM APPROVED #3029700, CSFM LISTED #3242-1653:207 AND MSFM APPROVED #2202. PROVIDE DETECTORS IN THE SUPPLY AIR DUCTS OF SYSTEMS WITH AIR VOLUMES OF 2000 CFM OR GREATER, OR WHERE A SYSTEM SERVES A COMMON AREA IN CONJUNCTION WITH ANOTHER SYSTEM WITH A COMBINED CFM OF 2000 OR GREATER. UNIT MUST BE INSTALLED IN A LOCATION THAT MEETS THE MANUFACTURERS MOUNTING CRITERIA AND THAT IS ACCESSIBLE FOR MAINTENANCE/TESTING UPON COMPLETION OF CONSTRUCTION. SMOKE DETECTOR PROVIDED AND INSTALLED BY THE MECHANICAL CONTRACTOR. ALL WIRING BY THE ELECTRICAL CONTRACTOR

2 DUCT SMOKE DETECTOR
NTS

rrm design group
rrmdesign.com | (805) 543-1794
3765 S. Higuera, San Luis Obispo, CA 93401

THE INCLUDED DRAWINGS, SPECIFICATIONS, IDEAS, DESIGNS AND ARRANGEMENTS REPRESENTED THEREBY ARE AND SHALL REMAIN THE PROPERTY OF RRM DESIGN GROUP AND NO PART THEREOF SHALL BE COPIED, DISCLOSED TO OTHERS OR USED IN CONNECTION WITH ANY WORK OR PROJECT OTHER THAN THE SPECIFIC PROJECT FOR WHICH THEY HAVE BEEN PREPARED AND DEVELOPED WITHOUT THE WRITTEN CONSENT OF RRM DESIGN GROUP. VISUAL CONTACT WITH THESE DRAWINGS OR SPECIFICATIONS SHALL CONSTITUTE CONCLUSIVE EVIDENCE OF ACCEPTANCE OF THESE RESTRICTIONS. SUBMITTAL OF THESE DOCUMENTS FOR AGENCY REVIEW SHALL NOTBE CONSIDERED A WAIVER OF RRM DESIGN GROUP'S RIGHTS.

RRM DESIGN GROUP COPYRIGHT 2021
RRM IS A CALIFORNIA CORPORATION

REGISTERED PROFESSIONAL ENGINEER
BRYAN P. STARRETT
M 34068
EXP. 6/30/24
MECHANICAL
STATE OF CALIFORNIA

CONSULTANT

3C | ENGINEERING
SMARTER BUILDINGS BY DESIGN
t. 805. 540. 3363 w WWW.3CENG.COM
1 1000 PALM ST. SAN LUIS OBISPO, CA 93401

BY 3C Engineering, Inc., ALL COMMON LAW COPYRIGHT AND OTHER PROPERTY RIGHTS RESERVE THIS DOCUMENT AS AN ORIGINAL AND UNPUBLISHED WORK PRODUCT. THIS WORK SHALL NOT BE DUPLICATED, COPIED, DISCLOSED OR USED IN CONNECTION WITH ANY WORK OR PROJECT OTHER THAN THE SPECIFIC PROJECT FOR WHICH IT AS BEEN PREPARED. NOR SHALL IT BE ASSIGNED TO ANY THIRD PARTY WITHOUT FIRST OBTAINING THE EXPRESS WRITTEN CONSENT OF VISUAL CONTACT. THIS DOCUMENT SHALL CONSTITUTE CONCLUSIVE EVIDENCE OF ACCEPTANCE OF THESE RESTRICTIONS.

AGENCY

FOURTH ST COMMUNITY CENTER AND PARK
HENDERSON AVE., PORTERVILLE, CA 93257

MECHANICAL DETAILS

NO.	REVISION	DATE
1	PLAN CHECK REVISION 1	5/17/24

PROJECT MANAGER DS
DRAWN BY BS
CHECKED BY BS
DATE 2024.05.17
PROJECT NUMBER 2883-01-RC22
SHEET M-003

100% CONSTRUCTION DOCUMENTS

S:\Shared\Jobs\ENG Projects\Porterville Community Center\Engineering\Porterville Community Center Mechanical Lead.dwg bhanjiev May 15,2024-1:32pm

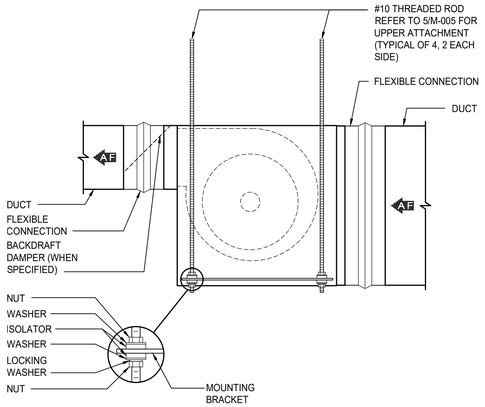

7 IN-LINE EXHAUST FAN
NTS

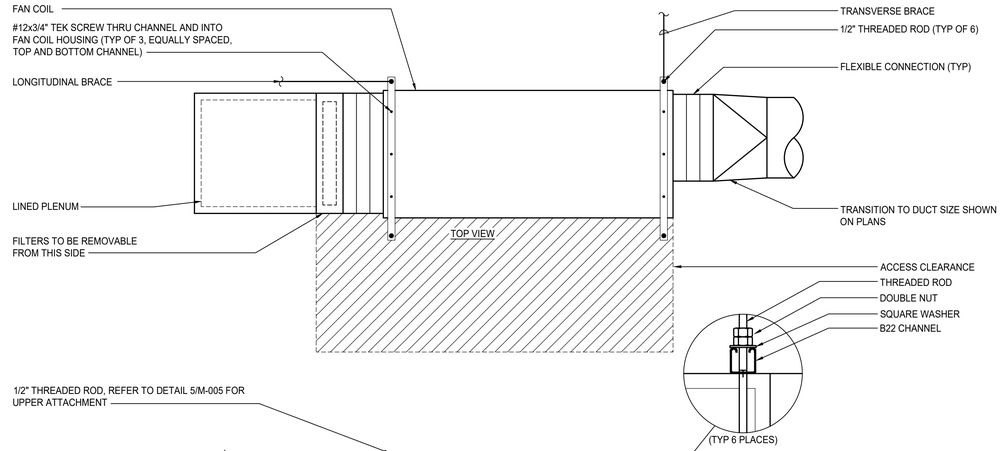

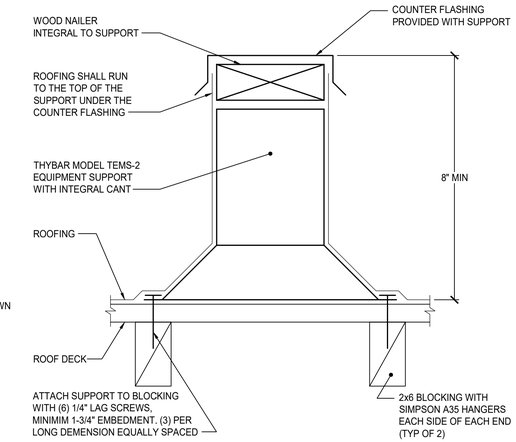

1 EQUIPMENT SUPPORT
NTS

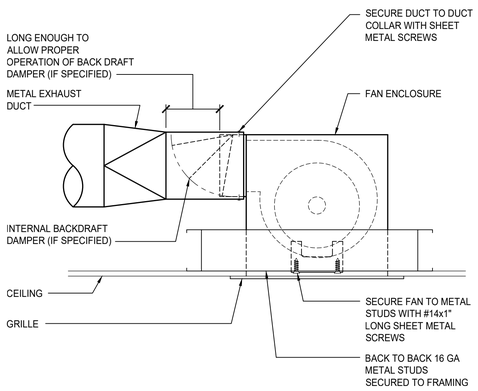

8 CEILING EXHAUST FAN
NTS

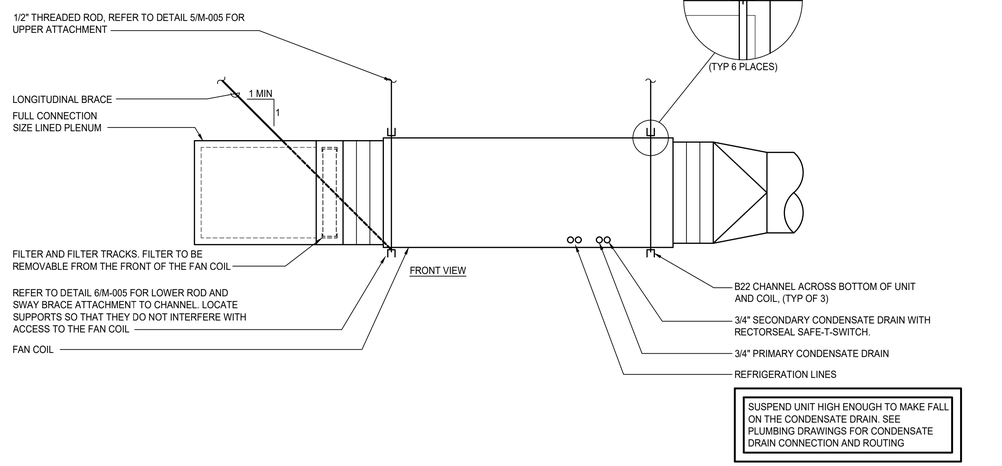

SUSPEND UNIT HIGH ENOUGH TO MAKE FALL ON THE CONDENSATE DRAIN. SEE PLUMBING DRAWINGS FOR CONDENSATE DRAIN CONNECTION AND ROUTING

4 SUSPENDED HORIZONTAL FAN COIL
NTS

PLATFORM SIZE TO VARY WITH EQUIPMENT SIZE. MAKE PLATFORM LEVEL.

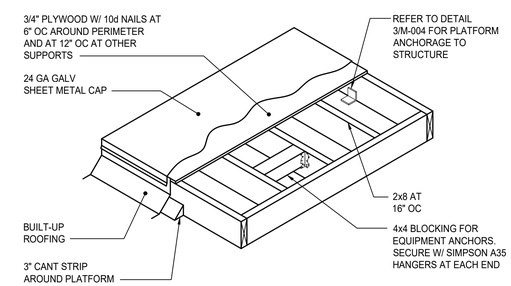

2 EQUIPMENT PLATFORM
NTS

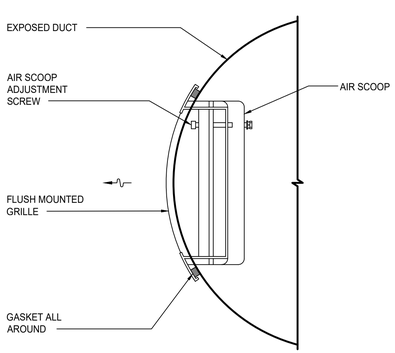

9 FLUSH MOUNTED EXPOSED GRILLE
NTS

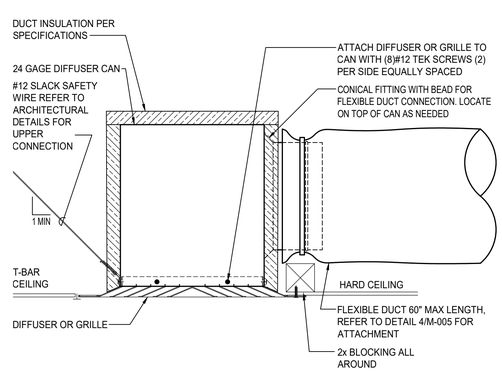

6 DIFFUSER OR GRILLE INSTALLATION
NTS

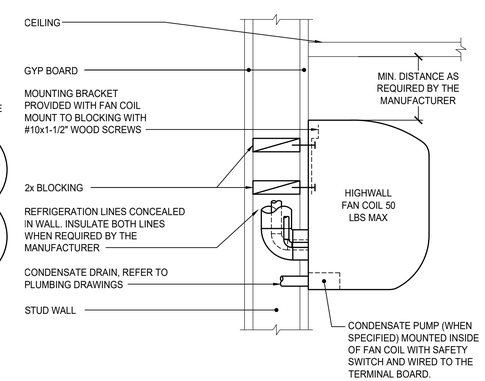

5 HIGH WALL FAN COIL MOUNTING (WOOD FRAMING)
NTS

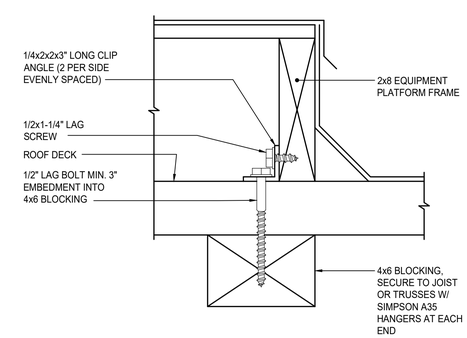

3 EQUIPMENT PLATFORM ANCHOR
NTS

rrm design group
rrmdesign.com | (805) 543-1794
3765 S. Higuera, San Luis Obispo, CA 93401

THE INCLUDED DRAWINGS, SPECIFICATIONS, IDEAS, DESIGNS AND ARRANGEMENTS REPRESENTED THEREBY ARE AND SHALL REMAIN THE PROPERTY OF RRM DESIGN GROUP AND NO PART THEREOF SHALL BE COPIED, DISCLOSED TO OTHERS OR USED IN CONNECTION WITH ANY WORK OR PROJECT OTHER THAN THE SPECIFIC PROJECT FOR WHICH THEY HAVE BEEN PREPARED AND DEVELOPED WITHOUT THE WRITTEN CONSENT OF RRM DESIGN GROUP. VISUAL CONTACT WITH THESE DRAWINGS OR SPECIFICATIONS SHALL CONSTITUTE CONCLUSIVE EVIDENCE OF ACCEPTANCE OF THESE RESTRICTIONS. SUBMITTAL OF THESE DRAWINGS FOR AGENCY REVIEW SHALL NOTBE CONSIDERED A WAIVER OF RRM DESIGN GROUP'S RIGHTS.

RRM DESIGN GROUP COPYRIGHT 2021
RRM IS A CALIFORNIA CORPORATION

REGISTERED PROFESSIONAL ENGINEER
BRIAN P. STARRETT
M 34068
EXP. 6/30/24
MECHANICAL
STATE OF CALIFORNIA

CONSULTANT

3C | ENGINEERING
SMARTER BUILDINGS BY DESIGN
t. 805. 540. 3363 w WWW.3CENG.COM
1 1000 Pacific St San Luis Obispo, CA 93401

BY 3C Engineering, Inc., ALL COMMON LAW COPYRIGHT AND OTHER PROPERTY RIGHTS RESERVE THIS DOCUMENT AS AN ORIGINAL AND UNPUBLISHED WORK PRODUCT. THIS WORK SHALL NOT BE DUPLICATED, COPIED, DISCLOSED OR USED IN CONNECTION WITH ANY WORK OR PROJECT OTHER THAN THE SPECIFIC PROJECT FOR WHICH IT AS BEEN PREPARED. NOR SHALL IT BE ASSIGNED TO ANY THIRD PARTY WITHOUT FIRST OBTAINING THE EXPRESS WRITTEN CONSENT OF VISUAL CONTACT. THIS DOCUMENT SHALL CONSTITUTE CONCLUSIVE EVIDENCE OF ACCEPTANCE OF THESE RESTRICTIONS.

AGENCY

FOURTH ST COMMUNITY CENTER AND PARK
HENDERSON AVE., PORTERVILLE, CA 93257

MECHANICAL DETAILS

NO.	REVISION	DATE
1	PLAN CHECK REVISION 1	5/17/24

PROJECT MANAGER: DS	
DRAWN BY: BS	CHECKED BY: BS
DATE: 2024.05.17	
PROJECT NUMBER: 2883-01-RC22	
SHEET: M-004	

100% CONSTRUCTION DOCUMENTS

S:\Shared\Jobs\ENG Projects\Portervile Community Center\Engineering\Porterville Community Center Mechanical Lead.dwg khanjiev May 15,2024-1:32pm

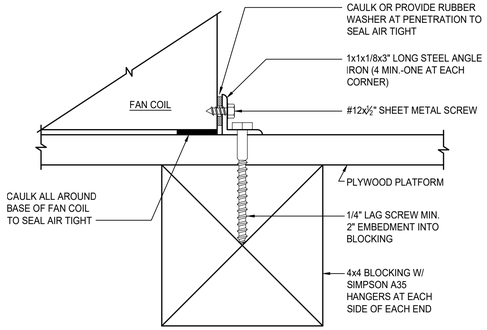

9 FAN COIL ANCHORAGE
NTS

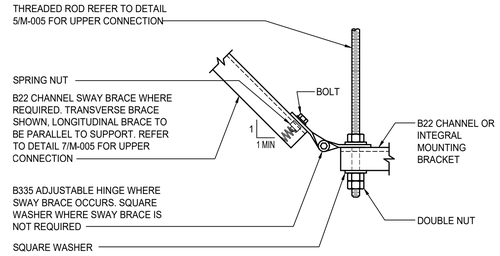

6 LOWER SUPPORT CONNECTIONS
NTS

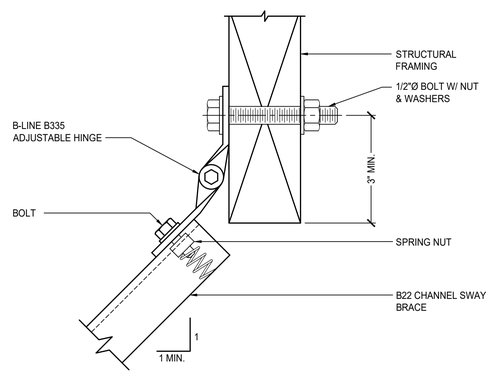

7 SWAY BRACE CONNECTION (STRUT)
NTS

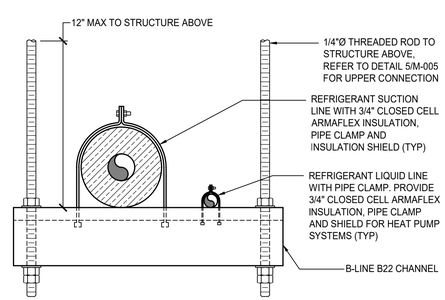

8 PIPE SUPPORT
NTS

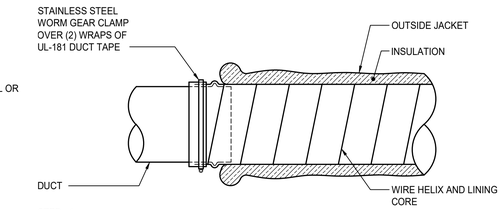

STEP - 1:
FOLD BACK JACKET AND INSULATION. SLIDE AT LEAST 1" OF CORE OVER DUCT AND PAST THE BEAD. SEAL CORE TO DUCT WITH AT LEAST (2) WRAPS OF UL-181 LISTED DUCT TAPE. SECURE CONNECTION WITH A CLAMP PLACED OVER THE CORE AND TAPE PAST THE BEAD.

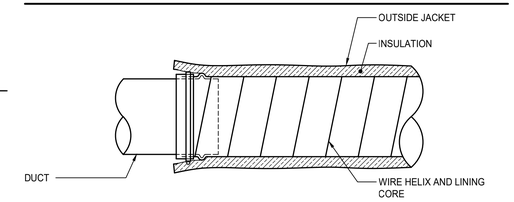

STEP - 2:
PULL THE INSULATION AND JACKET OVER THE TOP OF THE CORE AND THE CLAMP. TUCK THE OUTSIDE JACKET UNDER THE INSULATION.

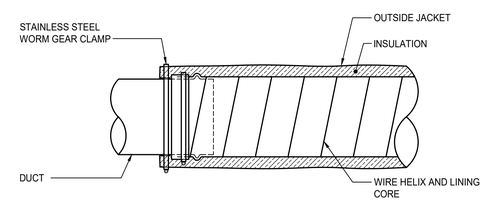

STEP - 3:
INSTALL A CLAMP AROUND THE ENTIRE FLEXIBLE DUCT ASSEMBLY

4 FLEXIBLE DUCT CONNECTION
NTS

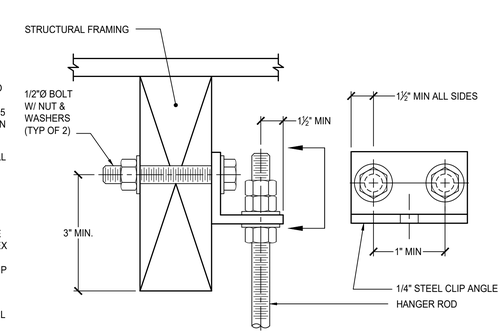

5 SUPPORT CONNECTION
NTS

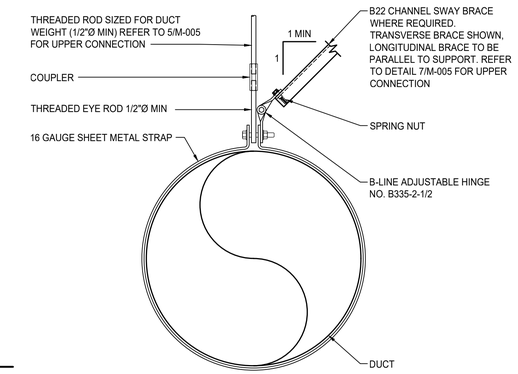

1 EXPOSED DUCT HANGER
NTS

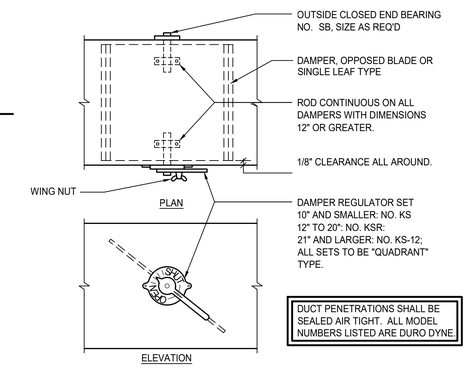

DUCT PENETRATIONS SHALL BE SEALED AIR TIGHT. ALL MODEL NUMBERS LISTED ARE DURO DYNE.

2 RECTANGULAR VOLUME DAMPER
NTS

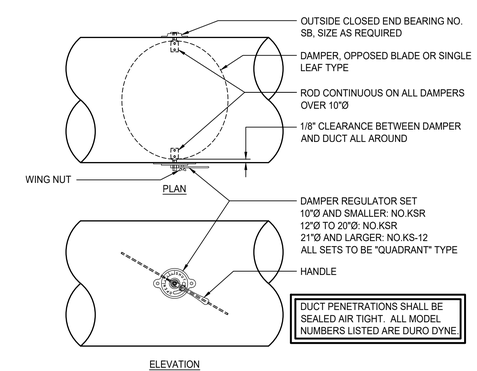

DUCT PENETRATIONS SHALL BE SEALED AIR TIGHT. ALL MODEL NUMBERS LISTED ARE DURO DYNE.

3 ROUND VOLUME DAMPER
NTS

rrm design group
rrmdesign.com | (805) 543-1794
3765 S. Higuera, San Luis Obispo, CA 93401

THE INCLUDED DRAWINGS, SPECIFICATIONS, IDEAS, DESIGNS AND ARRANGEMENTS REPRESENTED THEREBY ARE AND SHALL REMAIN THE PROPERTY OF RRM DESIGN GROUP AND NO PART THEREOF SHALL BE COPIED, DISCLOSED TO OTHERS OR USED IN CONNECTION WITH ANY WORK OR PROJECT OTHER THAN THE SPECIFIC PROJECT FOR WHICH THEY HAVE BEEN PREPARED AND DEVELOPED WITHOUT THE WRITTEN CONSENT OF RRM DESIGN GROUP. VISUAL CONTACT WITH THESE DRAWINGS OR SPECIFICATIONS SHALL CONSTITUTE CONCLUSIVE EVIDENCE OF ACCEPTANCE OF THESE RESTRICTIONS. SUBMITTAL OF THESE DOCUMENTS FOR AGENCY REVIEW SHALL NOTBE CONSIDERED A WAIVER OF RRM DESIGN GROUP'S RIGHTS.
RRM DESIGN GROUP COPYRIGHT 2021
RRM IS A CALIFORNIA CORPORATION

REGISTERED PROFESSIONAL ENGINEER
BRIAN P. STARRETT
M 34068
EXP. 6/30/24
MECHANICAL
STATE OF CALIFORNIA

CONSULTANT

3C | ENGINEERING
SMARTER BUILDINGS BY DESIGN
805. 540. 3363 WWW.3CENG.COM
1000 PALM ST. SAN LUIS OBISPO, CA 93401

BY 3C Engineering, Inc., ALL COMMON LAW COPYRIGHT AND OTHER PROPERTY RIGHTS RESERVE THIS DOCUMENT AS AN ORIGINAL AND UNPUBLISHED WORK PRODUCT. THIS WORK SHALL NOT BE DUPLICATED, COPIED, DISCLOSED OR USED IN CONNECTION WITH ANY WORK OR PROJECT OTHER THAN THE SPECIFIC PROJECT FOR WHICH IT AS BEEN PREPARED. NOR SHALL IT BE ASSIGNED TO ANY THIRD PARTY WITHOUT FIRST OBTAINING THE EXPRESS WRITTEN CONSENT OF VISUAL CONTACT. THIS DOCUMENT SHALL CONSTITUTE CONCLUSIVE EVIDENCE OF ACCEPTANCE OF THESE RESTRICTIONS.

AGENCY

100% CONSTRUCTION DOCUMENTS

FOURTH ST COMMUNITY CENTER AND PARK
HENDERSON AVE., PORTERVILLE, CA 93257

MECHANICAL DETAILS

NO.	REVISION	DATE
1	PLAN CHECK REVISION 1	5/17/24

PROJECT MANAGER: DS	
DRAWN BY: BS	CHECKED BY: BS
DATE: 2024.05.17	
PROJECT NUMBER: 2883-01-RC22	
SHEET: M-005	

S:\Shared\Jobs\ENG Projects\Porterville Community Center\Engineering\Porterville Community Center Mechanical Lead.dwg khanjiev May 15,2024-1:32pm

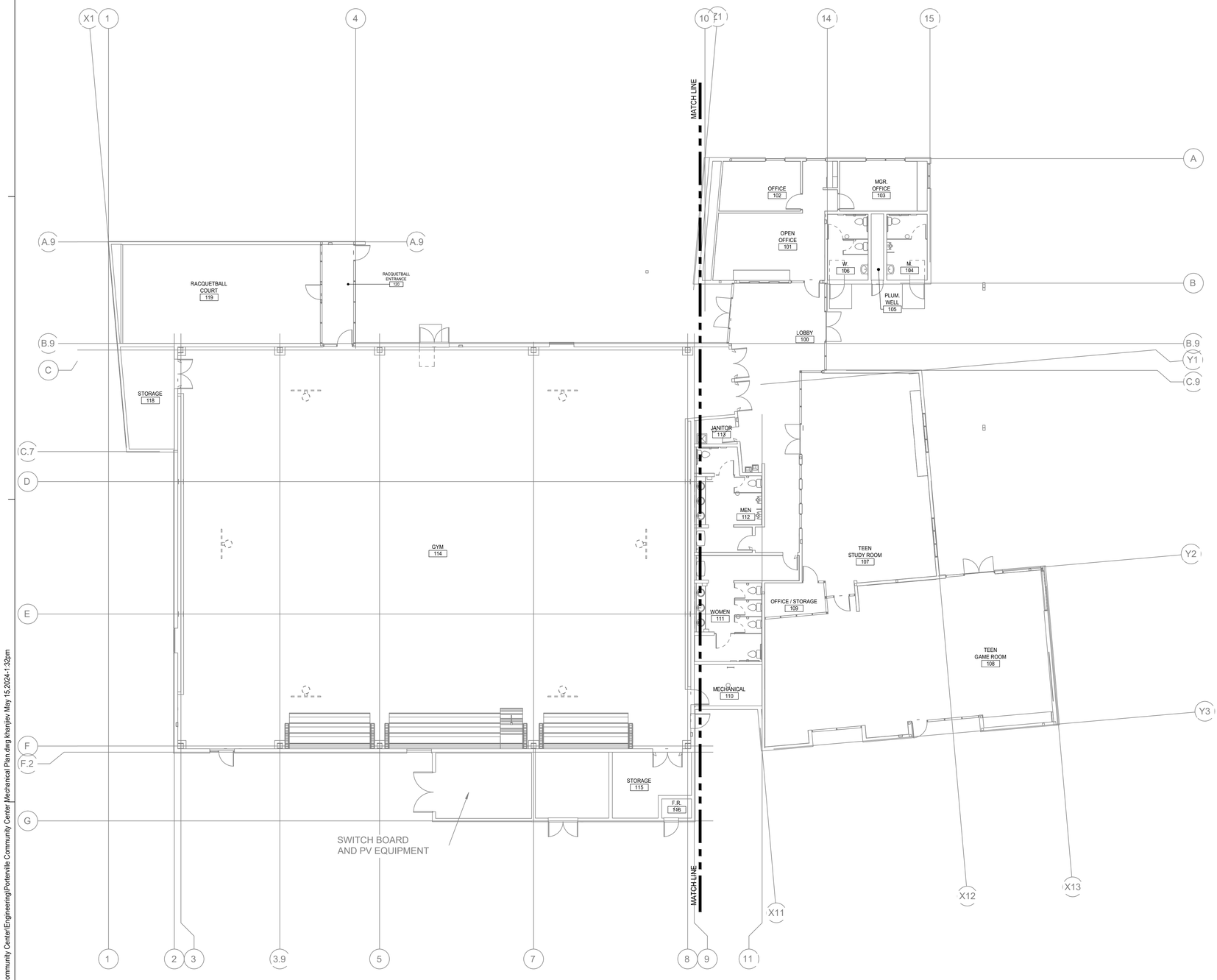

MECHANICAL OVERALL FLOOR PLAN

SCALE:3/32" = 1'-0"

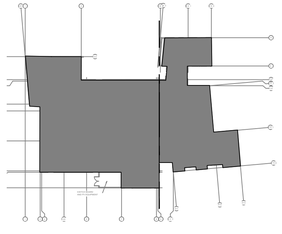

SHADING INDICATES AREA SHOWN

KEYPLAN

SCALE:1/64" = 1'-0"

S:\Shared\Jobs\ENG Projects\Porterville Community Center\Engineering\Porterville Community Center Mechanical Plan.dwg khanjiev May 15,2024-1:32pm

rrm design group

rrmdesign.com | (805) 543-1794

3765 S. Higuera, San Luis Obispo, CA 93401

THE INCLUDED DRAWINGS, SPECIFICATIONS, IDEAS, DESIGNS AND ARRANGEMENTS REPRESENTED THEREBY ARE AND SHALL REMAIN THE PROPERTY OF RRM DESIGN GROUP AND NO PART THEREOF SHALL BE COPIED, DISCLOSED TO OTHERS OR USED IN CONNECTION WITH ANY WORK OR PROJECT OTHER THAN THE SPECIFIED PROJECT FOR WHICH THEY HAVE BEEN PREPARED AND DEVELOPED WITHOUT THE WRITTEN CONSENT OF RRM DESIGN GROUP. VISUAL CONTACT WITH THESE DRAWINGS OR SPECIFICATIONS SHALL CONSTITUTE CONCLUSIVE EVIDENCE OF ACCEPTANCE OF THESE RESTRICTIONS. SUBMITTAL OF THESE DOCUMENTS FOR PUBLIC AGENCY REVIEW SHALL NOT BE CONSIDERED A WAIVER OF RRM DESIGN GROUP'S RIGHTS.

RRM DESIGN GROUP COPYRIGHT 2021
RRM IS A CALIFORNIA CORPORATION

REGISTERED PROFESSIONAL ENGINEER
LORIAN P. STARRETT
M 34068
EXP. 6/30/24
MECHANICAL
STATE OF CALIFORNIA

CONSULTANT

3C | ENGINEERING
SMARTER BUILDINGS BY DESIGN
1. 805. 540. 3363 ● WWW.3CENG.COM
1 1000 PALM ST. SAN LUIS OBISPO, CA 93401

BY 3C Engineering, Inc., ALL COMMON LAW COPYRIGHT AND OTHER PROPERTY RIGHTS RESERVE THIS DOCUMENT AS AN ORIGINAL AND UNPUBLISHED WORK PRODUCT. THIS WORK SHALL NOT BE DUPLICATED, COPIED, DISCLOSED OR USED IN CONNECTION WITH ANY WORK OR PROJECT OTHER THAN THE SPECIFIC PROJECT FOR WHICH IT AS BEEN PREPARED, NOR SHALL IT BE ASSIGNED TO ANY THIRD PARTY WITHOUT FIRST OBTAINING THE EXPRESS WRITTEN CONSENT OF VISUAL CONTACT. THIS DOCUMENT SHALL CONSTITUTE CONCLUSIVE EVIDENCE OF ACCEPTANCE OF THESE RESTRICTIONS.

AGENCY

FOURTH ST COMMUNITY CENTER AND PARK

HENDERSON AVE., PORTERVILLE, CA 93257

MECHANICAL OVERALL FLOOR PLAN

NO.	REVISION	DATE
1	PLAN CHECK REVISION 1	5/17/24

PROJECT MANAGER
DS

DRAWN BY
BS

CHECKED BY
BS

DATE
2024.05.17

PROJECT NUMBER
2883-01-RC22

SHEET
M-200

100% CONSTRUCTION DOCUMENTS

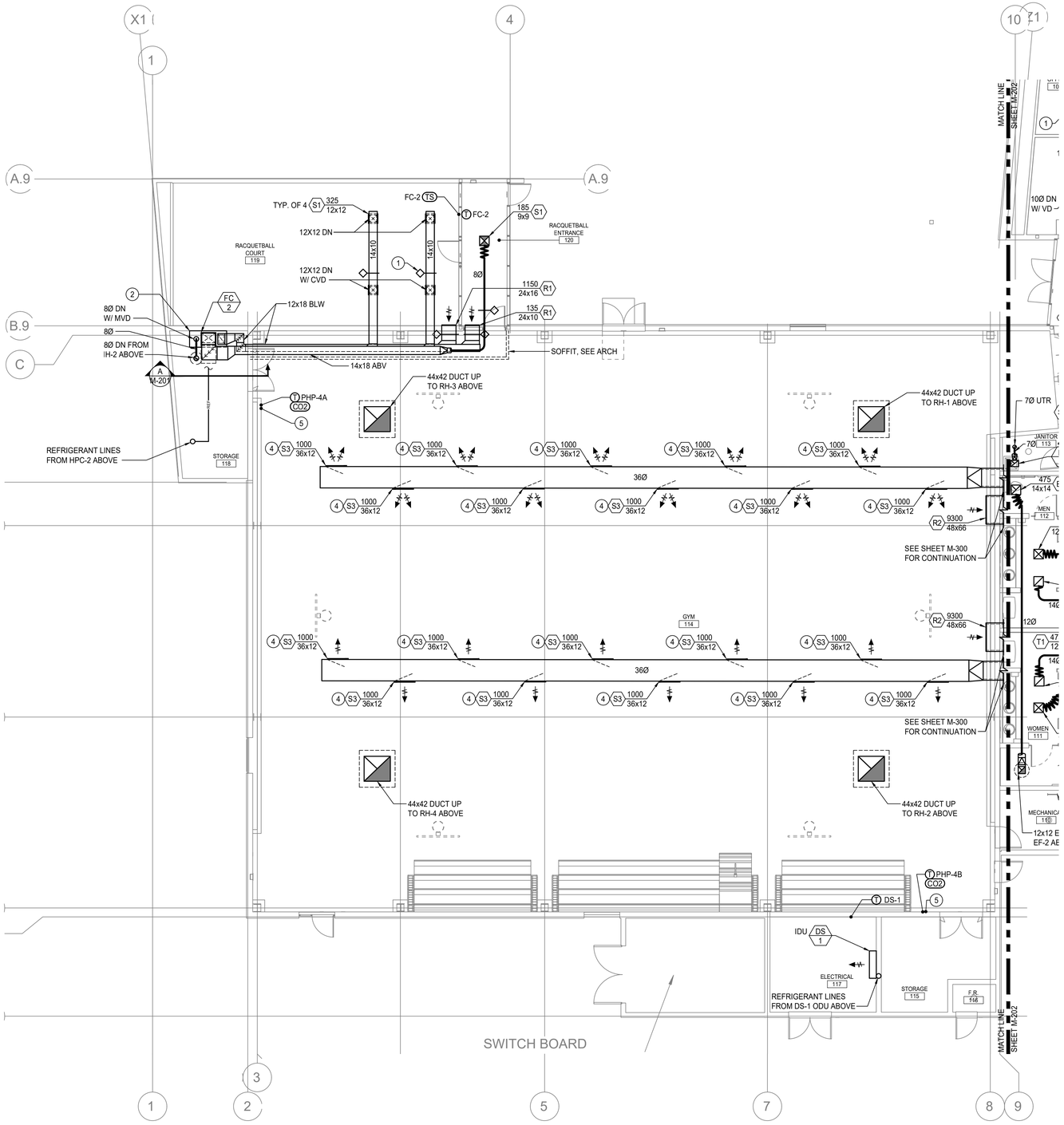

MECHANICAL FLOOR PLAN - NORTH ENLARGED

SCALE:1/8" = 1'-0"

KEY NOTES

APPLICABLE TO THIS SHEET ONLY

1	TYPICAL VOLUME DAMPER, REFER TO DETAILS 2/M-005 & 3/M-005.
2	24" TALL WOOD FRAMED PLENUM. INTERNALLY LINE PLENUM WITH 5/8" TYPE X GYP BOARD AND 1-1/2" DUCTLINER. DUCTLINER SHALL PROVIDE A MINIMUM INSTALLED R VALUE OF R-6. OMIT GYP BOARD AT CONCRETE SLAB. NO COMBUSTIBLE MATERIALS MAY BE EXPOSED TO THE AIRSTREAM WITHIN THE PLENUM.
3	PROVENT FILTER BOX MODEL # FLTPVFY-7585-03.
4	INSTALL GRILLES AT A 55° DOWNWARD ANGLE.
5	PROVIDE CAGE OR PLASTIC COVER TO PROTECT THERMOSTAT & CO2 SENSOR.

HVAC GENERAL NOTES

APPLICABLE TO THIS SHEET ONLY

1	VERIFY FINAL THERMOSTAT LOCATIONS WITH OWNER PRIOR TO INSTALLATION. IF OWNER INTENDS TO CHANGE LOCATION OF THERMOSTAT, CONTACT ENGINEER OF RECORD PRIOR TO FINALIZING LOCATION.
2	PROVIDE MANUAL VOLUME DAMPERS IN ALL BRANCH DUCTS TO AIR OUTLETS / INLETS. VOLUME DAMPERS ABOVE HARD LID CEILINGS TO BE CABLE OPERATED UNLESS NOTED OTHERWISE. CABLE TO BE ACCESSED THRU THE FACE OF GRILLE. AFTER BALANCING TUCK CABLE INTO DIFFUSER SO THAT IT IS NOT VISIBLE.
3	REFER TO DETAIL 8/M-005 FOR REFRIGERANT PIPING SUPPORT.
4	REFER TO DETAIL 1/M-005 FOR EXPOSED DUCT SUPPORT. ALL CONCEALED DUCT SHALL BE SUPPORTED IN ACCORDANCE WITH SMACNA HVAC DUCT CONSTRUCTION STANDARDS - METAL AND FLEXIBLE, 4TH EDITION. 1

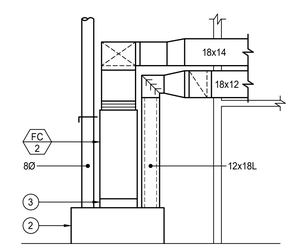

A FC-2 ELEVATION

SCALE:1/4" = 1'-0"

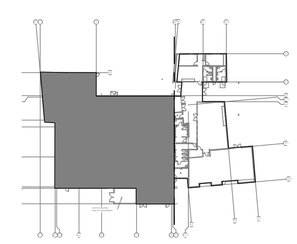

SHADING INDICATES AREA SHOWN

KEYPLAN

SCALE:1/64" = 1'-0"

rrm design group
rrmdesign.com | (805) 543-1794
3765 S. Higuera, San Luis Obispo, CA 93401

THE INCLUDED DRAWINGS, SPECIFICATIONS, IDEAS, DESIGNS AND ARRANGEMENTS REPRESENTED THEREBY ARE AND SHALL REMAIN THE PROPERTY OF RRM DESIGN GROUP AND NO PART THEREOF SHALL BE COPIED, DISCLOSED TO OTHERS OR USED IN CONNECTION WITH ANY WORK OR PROJECT OTHER THAN THE SPECIFIC PROJECT FOR WHICH THEY HAVE BEEN PREPARED AND DEVELOPED WITHOUT THE WRITTEN CONSENT OF RRM DESIGN GROUP. VISUAL CONTACT WITH THESE DRAWINGS OR SPECIFICATIONS SHALL CONSTITUTE CONCLUSIVE EVIDENCE OF ACCEPTANCE OF THESE RESTRICTIONS. SUBMITTAL OF THESE DRAWINGS FOR AGENCY REVIEW SHALL NOTBE CONSIDERED A WAIVER OF RRM DESIGN GROUP'S RIGHTS.

RRM DESIGN GROUP COPYRIGHT 2021
RRM IS A CALIFORNIA CORPORATION

REGISTERED PROFESSIONAL ENGINEER
BRYAN P. STARRETT
M 34068
EXP. 6/30/24
MECHANICAL
STATE OF CALIFORNIA

CONSULTANT

3C | ENGINEERING
SMARTER BUILDINGS BY DESIGN
t. 805. 540. 3363 w. WWW.3CENG.COM
1 1000 PALM ST. SAN LUIS OBISPO, CA 93401

BY 3C Engineering, Inc., ALL COMMON LAW COPYRIGHT AND OTHER PROPERTY RIGHTS RESERVE THIS DOCUMENT AS AN ORIGINAL AND UNPUBLISHED WORK PRODUCT. THIS WORK SHALL NOT BE DUPLICATED, COPIED, DISCLOSED OR USED IN CONNECTION WITH ANY WORK OR PROJECT OTHER THAN THE SPECIFIC PROJECT FOR WHICH IT AS BEEN PREPARED. NOR SHALL IT BE ASSIGNED TO ANY THIRD PARTY WITHOUT FIRST OBTAINING THE EXPRESS WRITTEN CONSENT OF VISUAL CONTACT. THIS DOCUMENT SHALL CONSTITUTE CONCLUSIVE EVIDENCE OF ACCEPTANCE OF THESE RESTRICTIONS.

AGENCY

FOURTH ST COMMUNITY CENTER AND PARK

HENDERSON AVE., PORTERVILLE, CA 93257

MECHANICAL FLOOR PLAN - NORTH ENLARGED

NO.	REVISION	DATE
1	PLAN CHECK REVISION 1	5/17/24

PROJECT MANAGER: DS
DRAWN BY: BS
CHECKED BY: BS
DATE: 2024.05.17
PROJECT NUMBER: 2883-01-RC22
SHEET: M-201

100% CONSTRUCTION DOCUMENTS

S:\Shared\Jobs\ENG Projects\Porterville Community Center\Engineering\Porterville Community Center Mechanical Plan.dwg khanjiev May 15,2024-1:32pm

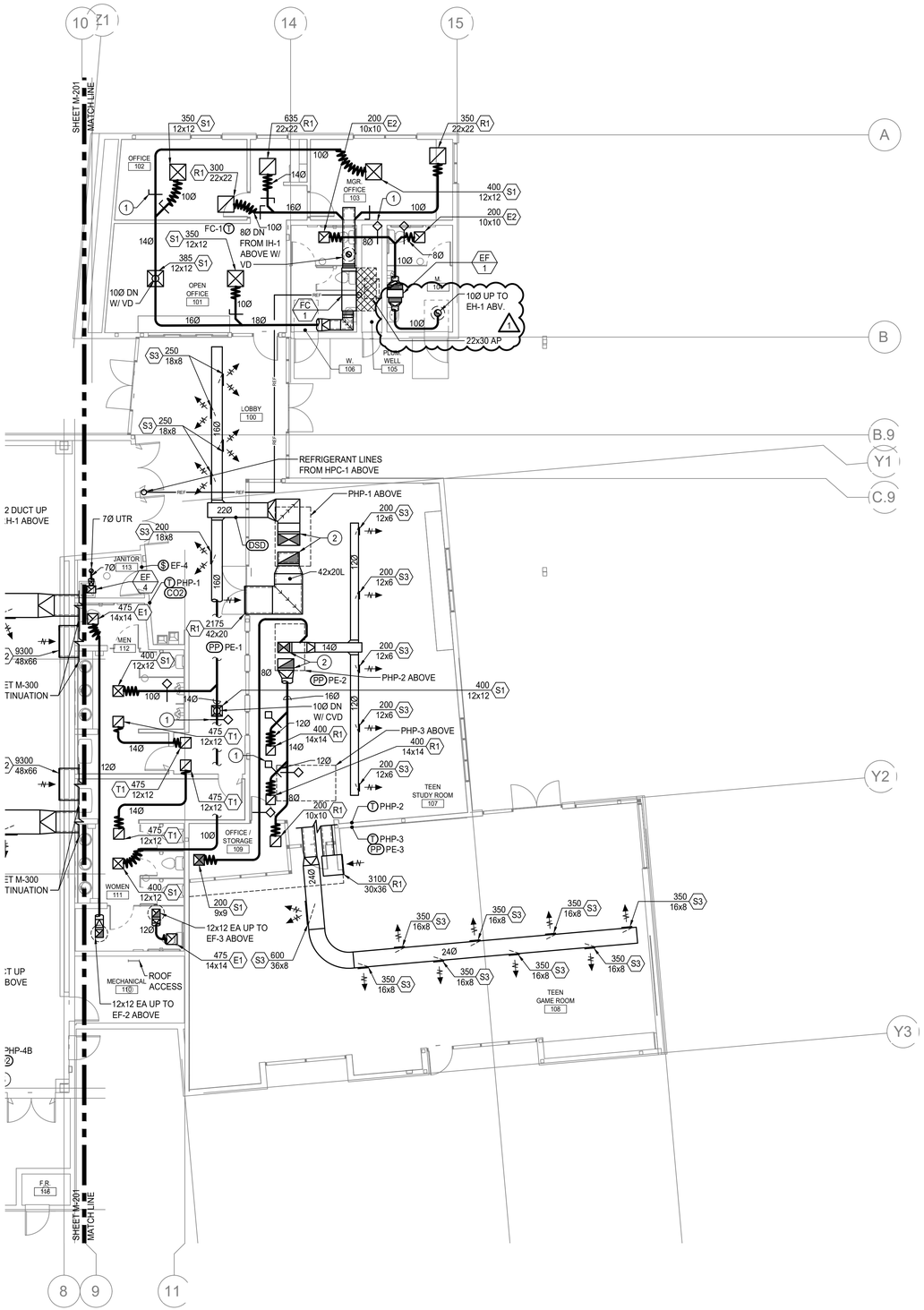

MECHANICAL FLOOR PLAN - SOUTH ENLARGED

SCALE:1/8" = 1'-0"

KEY NOTES

APPLICABLE TO THIS SHEET ONLY

1	TYPICAL VOLUME DAMPER, REFER TO DETAILS 2/M-005 & 3/M-005.
2	TYPICAL DUCT TAKE-OFF FROM UNIT ABOVE, REFER TO DETAIL 3/M-003.

HVAC GENERAL NOTES

APPLICABLE TO THIS SHEET ONLY

1	VERIFY FINAL THERMOSTAT LOCATIONS WITH OWNER PRIOR TO INSTALLATION. IF OWNER INTENDS TO CHANGE LOCATION OF THERMOSTAT, CONTACT ENGINEER OF RECORD PRIOR TO FINALIZING LOCATION.
2	PROVIDE MANUAL VOLUME DAMPERS IN ALL BRANCH DUCTS TO AIR OUTLETS / INLETS. VOLUME DAMPERS ABOVE HARD LID CEILINGS TO BE CABLE OPERATED UNLESS NOTED OTHERWISE. CABLE TO BE ACCESSED THRU THE FACE OF GRILLE. AFTER BALANCING TUCK CABLE INTO DIFFUSER SO THAT IT IS NOT VISIBLE.
3	REFER TO DETAIL 8/M-005 FOR REFRIGERANT PIPING SUPPORT.
4	REFER TO DETAIL 1/M-005 FOR EXPOSED DUCT SUPPORT. ALL CONCEALED DUCT SHALL BE SUPPORTED IN ACCORDANCE WITH SMACNA HVAC DUCT CONSTRUCTION STANDARDS - METAL AND FLEXIBLE, 4TH EDITION.

PASSIVE MAKE-UP AIR SCHEDULE

ROOM	DOOR LOUVER MINIMUM FREE AREA FT²	DOOR UNDER CUT
OFFICE 102	NA	1"
MGR. OFFICE 103	NA	1"
JAN 113	0.25	NA

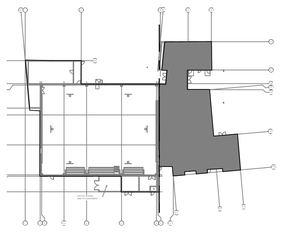

SHADING INDICATES AREA SHOWN

KEYPLAN

SCALE:1/64" = 1'-0"

rrm design group
rrmdesign.com | (805) 543-1794
3765 S. Higuera, San Luis Obispo, CA 93401

THE INCLUDED DRAWINGS, SPECIFICATIONS, IDEAS, DESIGNS AND ARRANGEMENTS REPRESENTED THEREBY ARE AND SHALL REMAIN THE PROPERTY OF RRM DESIGN GROUP AND NO PART THEREOF SHALL BE COPIED, DISCLOSED TO OTHERS OR USED IN CONNECTION WITH ANY WORK OR PROJECT OTHER THAN THE SPECIFIC PROJECT FOR WHICH THEY HAVE BEEN PREPARED AND DEVELOPED WITHOUT THE WRITTEN CONSENT OF RRM DESIGN GROUP. VISUAL CONTACT WITH THESE DRAWINGS OR SPECIFICATIONS SHALL CONSTITUTE CONCLUSIVE EVIDENCE OF ACCEPTANCE OF THESE RESTRICTIONS. THE REPRODUCTION FOR REVIEW OR ANY OTHER PURPOSE SHALL NOTBE CONSIDERED A WAIVER OF RRM DESIGN GROUP'S RIGHTS.

RRM DESIGN GROUP COPYRIGHT 2021
RRM IS A CALIFORNIA CORPORATION

REGISTERED PROFESSIONAL ENGINEER
JONATHAN P. STARRETT
M 34068
EXP. 6/30/24
MECHANICAL
STATE OF CALIFORNIA

CONSULTANT

3C | ENGINEERING
SMARTER BUILDINGS BY DESIGN
805. 540. 3363 WWW.3CENG.COM
1000 PALM ST. SAN LUIS OBISPO, CA 93401

BY 3C Engineering, Inc., ALL COMMON LAW COPYRIGHT AND OTHER PROPERTY RIGHTS RESERVE THIS DOCUMENT AS AN ORIGINAL AND UNPUBLISHED WORK PRODUCT. THIS WORK SHALL NOT BE DUPLICATED, COPIED, DISCLOSED OR USED IN CONNECTION WITH ANY WORK OR PROJECT OTHER THAN THE SPECIFIC PROJECT FOR WHICH IT AS BEEN PREPARED. NOR SHALL IT BE ASSIGNED TO ANY THIRD PARTY WITHOUT FIRST OBTAINING THE EXPRESS WRITTEN CONSENT OF VISUAL CONTACT. THIS DOCUMENT SHALL CONSTITUTE CONCLUSIVE EVIDENCE OF ACCEPTANCE OF THESE RESTRICTIONS.

AGENCY

FOURTH ST COMMUNITY CENTER AND PARK

HENDERSON AVE., PORTERVILLE, CA 93257

MECHANICAL FLOOR PLAN - SOUTH ENLARGED

NO.	REVISION	DATE
1	PLAN CHECK REVISION 1	5/17/24

PROJECT MANAGER: DS	
DRAWN BY: BS	CHECKED BY: BS
DATE: 2024.05.17	
PROJECT NUMBER: 2883-01-RC22	
SHEET: M-202	

100% CONSTRUCTION DOCUMENTS

S:\Shared\Jobs\ENG Projects\Porterville Community Center\Engineering\Porterville Community Center Mechanical Plan.dwg khanjiev May 15,2024-1:32pm

MECHANICAL OVERALL ROOF PLAN

SCALE:3/32" = 1'-0"

KEY NOTES

APPLICABLE TO THIS SHEET ONLY

1	TYPICAL ROOF DUCT SUPPORT, REFER TO DETAIL 11/M-003.
2	TYPICAL ROOF CAP, REFER TO DETAIL 10/M-003.
3	TYPICAL FLEXIBLE CONNECTION COVER, REFER TO DETAIL 4/M-003.

HVAC GENERAL NOTES

APPLICABLE TO THIS SHEET ONLY

1	THE FOLLOWING SHALL BE KEPT A MINIMUM OF 10 FT. AWAY FROM THE OUTSIDE AIR INTAKES: FUEL BURNING APPLIANCE VENT, EXHAUST VENTS OR APPLIANCE VENT OUTLET, AND PLUMBING DRAINAGE SYSTEM / VENTS.
2	OUTDOOR AIR INTAKES SHALL BE IN ACCORDANCE WITH CMC 402.4 AND CMC 402.4.1. 1

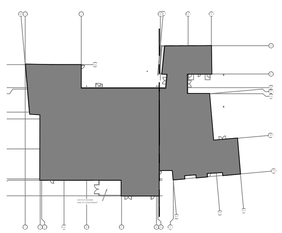

SHADING INDICATES AREA SHOWN

KEYPLAN

SCALE:1/64" = 1'-0"

rrm design group

rrmdesign.com | (805) 543-1794

3765 S. Higuera, San Luis Obispo, CA 93401

THE INCLUDED DRAWINGS, SPECIFICATIONS, IDEAS, DESIGNS AND ARRANGEMENTS REPRESENTED THEREBY ARE AND SHALL REMAIN THE PROPERTY OF RRM DESIGN GROUP AND NO PART THEREOF SHALL BE COPIED, DISCLOSED TO OTHERS OR USED IN CONNECTION WITH ANY WORK OR PROJECT OTHER THAN THE SPECIFIED PROJECT FOR WHICH THEY HAVE BEEN PREPARED AND DEVELOPED WITHOUT THE WRITTEN CONSENT OF RRM DESIGN GROUP. VISUAL CONTACT WITH THESE DRAWINGS OR SPECIFICATIONS SHALL CONSTITUTE CONCLUSIVE EVIDENCE OF ACCEPTANCE OF THESE RESTRICTIONS. SUBMITTAL OF THESE DOCUMENTS FOR PUBLIC AGENCY REVIEW SHALL NOT BE CONSIDERED A WAIVER OF RRM DESIGN GROUP'S RIGHTS.

RRM DESIGN GROUP COPYRIGHT 2021
RRM IS A CALIFORNIA CORPORATION

REGISTERED PROFESSIONAL ENGINEER
GRIAN P. STARRETT
M 34068
EXP. 6/30/24
MECHANICAL
STATE OF CALIFORNIA

CONSULTANT

3C | ENGINEERING
SMARTER BUILDINGS BY DESIGN
t. 805.540.3363 ● www.3CENG.COM
1000 PALM ST. SAN LUIS OBISPO, CA 93401

BY 3C Engineering, Inc., ALL COMMON LAW COPYRIGHT AND OTHER PROPERTY RIGHTS RESERVE THIS DOCUMENT AS AN ORIGINAL AND UNPUBLISHED WORK PRODUCT. THIS WORK SHALL NOT BE DUPLICATED, COPIED, DISCLOSED OR USED IN CONNECTION WITH ANY WORK OR PROJECT OTHER THAN THE SPECIFIC PROJECT FOR WHICH IT AS BEEN PREPARED, NOR SHALL IT BE ASSIGNED TO ANY THIRD PARTY WITHOUT FIRST OBTAINING THE EXPRESS WRITTEN CONSENT OF VISUAL CONTACT. THIS DOCUMENT SHALL CONSTITUTE CONCLUSIVE EVIDENCE OF ACCEPTANCE OF THESE RESTRICTIONS.

AGENCY

FOURTH ST COMMUNITY CENTER AND PARK

HENDERSON AVE., PORTERVILLE, CA 93257

MECHANICAL OVERALL ROOF PLAN

NO.	REVISION	DATE
1	PLAN CHECK REVISION 1	5/17/24

PROJECT MANAGER
DS

DRAWN BY
BS

CHECKED BY
BS

DATE
2024.05.17

PROJECT NUMBER
2883-01-RC22

SHEET
M-300

100% CONSTRUCTION DOCUMENTS

S:\Shared\Jobs\ENG Projects\Porterville Community Center\Engineering\Porterville Community Center Mechanical Plan.dwg khanjiev May 15,2024-1:32pm

PLUMBING LEGEND

SYMBOL	ABBREVIATION	DESCRIPTION
		BACK FLOW PREVENTOR
		BALL VALVE
	BFV	BUTTERFLY VALVE
		CHECKVALVE
	CP	CIRCULATION PUMP
	COTG	CLEAN OUT THROUGH GRADE
	FCO	FLOOR CLEAN OUT
	HB	HOSE BIBB
		RECESSED HOSE BIBB
		SHUT OFF VALVE IN PIPE DROP OR PIPE RISER
	TPV	TRAP PRIMER VALVE
		UNION
		PIPE DOWN
		PIPE UP
		PIPE TEE DOWN
		REDUCED PRESSURE BACK FLOW PREVENTOR
WCO	WCO	WALL CLEANOUT
	WHA	WATER HAMMER ARRESTOR
	CW	COLD WATER
CD	CD	CONDENSATE DRAIN
	HW	HOT WATER
	HWR	HOT WATER RETURN
	V	SANITARY VENT
TP TP	TP	TRAP PRIMER
	S/W	WASTE (BELOW GRADE)

PLUMBING ABBREVIATIONS

ABV	ABOVE	HD	HEAD
ADA	AMERICANS WITH DISABILITIES ACT	HP	HORSE POWER
AFF	ABOVE FINISHED FLOOR	HZ	HERTZ
AG	ABOVE GRADE	IE	INVERT ELEVATION
AHJ	AUTHORITY HAVING JURISDICTION	IWC	INCHES OF WATER COLUMN
ALUM	ALUMINUM	KW	KILOWATTS
AMB	AMBIENT	LAV	LAVATORY
AMP	AMPERAGE	LBS	POUNDS
ARCH	ARCHITECT, ARCHITECTURAL	LWT	LEAVING WATER TEMPERATURE
BEL	BELOW	MAX	MAXIMUM
BF	BELOW FLOOR	MBH	1000 BRITISH THERMAL UNITS PER HOUR
BG	BELOW GRADE	MCA	MINIMUM CIRCUIT AMPS
BFP	BACKFLOW PREVENTOR	MECH	MECHANICAL
BLDG	BUILDING	MFGR	MANUFACTURE OR MANUFACTURER
BOD	BASIS OF DESIGN	MIN	MINIMUM
BTUH	BRITISH THERMAL UNIT PER HOUR	MU	MAKE-UP
CA	COMBUSTION AIR	(N)	NEW
CD	CONDENSATE DRAIN	NOM	NOMINAL
CFH	CUBIC FEET PER HOUR	NPS	NOMINAL PIPE SIZE
CONN	CONNECTION	NTS	NOT TO SCALE
CONT	CONTINUATION	OPT	OPERATING
CI	CAST IRON	OSHPD	OFFICE OF STATEWIDE HEALTH PLANNING AND DEVELOPMENT
CP	CHROME PLATED	PD	PRESSURE DROP
DFU	DRAINAGE FIXTURE UNITS	PH	PHASE
DN	DOWN	PSI	POUNDS PER SQUARE INCH
DSA	DIVISION OF THE STATE ARCHITECT	PW	PROCESS WASTE
(E)	EXISTING	RM	ROOM
EC	EVAPORATIVE COOLER	RPM	REVOLUTIONS PER MINUTE
EFF	EFFICIENCY	SDL	STORM DRAIN LEADER
ELEC	ELECTRICAL	SDO	STORM DRAIN OVERFLOW
EQPT	EQUIPMENT	SHT	SHEET
EWT	ENTERING WATER TEMPERATURE	SOV	SHUT OFF VALVE
FA	FROM ABOVE	SS	STAINLESS STEEL
FC	FLEXIBLE CONNECTION	TEMP	TEMPORARY, TEMPERATURE
FLA	FULL LOAD AMPS	TYP	TYPICAL
FLR	FLOOR	UON	UNLESS OTHERWISE NOTED
FPS	FEET PER SECOND	UTR	UP TO OR UP THROUGH ROOF
FR	FROM	V	VENT
FT	FLUSH TANK	VAC	VACUUM
FV	FLUSH VALVE	VTR	VENT THROUGH ROOF
GA	GAGE OR GAUGE	WC	WATER CLOSET
GALV	GALVANIZED	W	WASTE
GPC	GALLONS PER CYCLE	W/	WITH
GPF	GALLONS PER FLUSH	W/O	WITHOUT
GPM	GALLONS PER MINUTE	WSFU	WATER SUPPLY FIXTURE UNIT
GYP	GYPSUM	WT	WEIGHT EXPRESSED IN POUNDS
GW	GREASE WASTE		

CAL GREEN CODE NONRESIDENTIAL MANDATORY MEASURES

5.504.5.3 FILTERS. IN MECHANICALLY VENTILATED BUILDINGS, PROVIDE REGULARLY OCCUPIED AREAS OF THE BUILDING WITH AIR FILTRATION MEDIA FOR OUTSIDE AND RETURN AIR THAT PROVIDES AT LEAST A MINIMUM EFFICIENCY REPORTING VALUE (MERV) OF 13. MERV 13 FILTERS SHALL BE INSTALLED PRIOR TO OCCUPANCY, AND RECOMMENDATIONS FOR MAINTENANCE WITH FILTERS OF THE SAME VALUE SHALL BE INCLUDED IN THE OPERATION AND MAINTENANCE MANUAL. FILTERS SHALL BE CLEARLY LABELED BY THE MANUFACTURER INDICATING THE MERV RATING.

EXCEPTIONS:
1. EXISTING MECHANICAL EQUIPMENT.

SECTION 5.505 INDOOR MOISTURE CONTROL

5.505.1 INDOOR MOISTURE CONTROL. BUILDINGS SHALL MEET OR EXCEED THE PROVISIONS OF CALIFORNIA BUILDING CODE, CCR, TITLE 24, PART 2, SECTIONS 1202 (VENTILATION) AND CHAPTER 14 (EXTERIOR WALLS). FOR ADDITIONAL MEASURES NOT APPLICABLE TO LOW-RISE RESIDENTIAL OCCUPANCIES, SEE SECTION 5.407.2 OF THIS CODE.

SECTION 5.506 INDOOR AIR QUALITY

5.506.1 OUTSIDE AIR DELIVERY. FOR MECHANICALLY OR NATURALLY VENTILATED SPACES IN BUILDINGS, MEET THE MINIMUM REQUIREMENTS OF SECTION 120.1 (REQUIREMENTS FOR VENTILATION) OF THE 2022 CALIFORNIA ENERGY CODE, OR THE APPLICABLE LOCAL CODE, WHICHEVER IS MORE STRINGENT, AND DIVISION 1, CHAPTER 4 OF CCR, TITLE 8.

5.506.2 CARBON DIOXIDE (CO2) MONITORING. FOR BUILDINGS OR ADDITIONS EQUIPPED WITH DEMAND CONTROL VENTILATION, CO2 SENSORS AND VENTILATION CONTROLS SHALL BE SPECIFIED AND INSTALLED IN ACCORDANCE WITH THE REQUIREMENTS OF THE 2022 CALIFORNIA ENERGY CODE, SECTION 120.1(C)(4).

5.506.3 CARBON DIOXIDE (CO2) MONITORING IN CLASSROOMS. EACH PUBLIC K-12 SCHOOL CLASSROOM, AS LISTED IN TABLE 120.1-A OF THE CALIFORNIA ENERGY CODE, SHALL BE EQUIPPED WITH A CARBON DIOXIDE MONITOR OR SENSOR THAT MEETS THE FOLLOWING REQUIREMENTS:
1. THE MONITOR OR SENSOR SHALL BE PERMANENTLY AFFIXED IN A TAMPER-PROOF MANNER IN EACH CLASSROOM BETWEEN 3 AND 6 FEET ABOVE THE FLOOR AND AT LEAST 5 FEET AWAY FROM DOORS AND OPERABLE WINDOWS.
2. WHEN THE MONITOR OR SENSOR IS NOT INTEGRAL TO A DIRECT DIGITAL CONTROL (DDC) SYSTEM, THE MONITOR OR SENSOR SHALL DISPLAY THE CARBON DIOXIDE READINGS ON THE DEVICE. WHEN THE SENSOR IS INTEGRAL TO A DDC SYSTEM, THE CARBON DIOXIDE READINGS SHALL BE AVAILABLE TO AND REGULARLY MONITORED BY FACILITY PERSONNEL.
3. A MONITOR SHALL PROVIDE NOTIFICATION THROUGH A VISUAL INDICATOR ON THE MONITOR WHEN THE CARBON DIOXIDE LEVELS IN THE CLASSROOM HAVE EXCEEDED 1,100 PPM. A SENSOR INTEGRAL TO A DDC SYSTEM SHALL PROVIDE NOTIFICATION TO FACILITY PERSONNEL THROUGH A VISUAL AND/OR AUDIBLE INDICATOR WHEN THE CARBON DIOXIDE LEVELS IN THE CLASSROOM HAVE EXCEEDED 1,100 PPM.
4. THE MONITOR OR SENSOR SHALL MEASURE CARBON DIOXIDE LEVELS AT MINIMUM 15-MINUTE INTERVALS AND SHALL MAINTAIN A RECORD OF PREVIOUS CARBON DIOXIDE MEASUREMENTS OF NOT LESS THAN 30 DAYS DURATION.
5. THE MONITOR OR SENSOR USED TO MEASURE CARBON DIOXIDE LEVELS SHALL HAVE THE CAPACITY TO MEASURE CARBON DIOXIDE LEVELS WITH A RANGE OF 400 PPM TO 2000 PPM OR GREATER.
6. THE MONITOR OR SENSOR SHALL BE CERTIFIED BY THE MANUFACTURER TO BE ACCURATE WITHIN 75 PPM AT 1,000 PPM CARBON DIOXIDE CONCENTRATION AND SHALL BE CERTIFIED BY THE MANUFACTURER TO REQUIRE CALIBRATION NO MORE FREQUENTLY THAN ONCE EVERY 5 YEARS.

SECTION 5.508 OUTDOOR AIR QUALITY

5.508.1 OZONE DEPLETION AND GREENHOUSE GAS REDUCTIONS. INSTALLATIONS OF HVAC, REFRIGERATION AND FIRE SUPPRESSION EQUIPMENT SHALL COMPLY WITH SECTIONS 5.508.1.1 AND 5.508.1.2.

5.508.1.1 CHLOROFLUOROCARBONS (CFCS). INSTALL HVAC, REFRIGERATION AND FIRE SUPPRESSION EQUIPMENT THAT DO NOT CONTAIN CFCS.

5.508.1.2 HALONS. INSTALL HVAC, REFRIGERATION AND FIRE SUPPRESSION EQUIPMENT THAT DO NOT CONTAIN HALONS.

SECTION 702.1 INSTALLER TRAINING

HVAC SYSTEM INSTALLERS SHALL BE TRAINED AND CERTIFIED IN THE PROPER INSTALLATION OF HVAC SYSTEMS INCLUDING DUCTS AND EQUIPMENT BY A NATIONALLY OR REGIONALLY RECOGNIZED TRAINING OR CERTIFICATION PROGRAM. UNCERTIFIED PERSONS MAY PERFORM HVAC INSTALLATIONS WHEN UNDER THE DIRECT SUPERVISION AND RESPONSIBILITY OF A PERSON TRAINED AND CERTIFIED TO INSTALL HVAC SYSTEMS OR CONTRACTOR LICENSED TO INSTALL HVAC SYSTEMS. EXAMPLES OF ACCEPTABLE HVAC TRAINING AND CERTIFICATION PROGRAMS INCLUDE BUT ARE NOT LIMITED TO THE FOLLOWING:
1. STATE CERTIFIED APPRENTICESHIP PROGRAMS.
2. PUBLIC UTILITY TRAINING PROGRAMS.
3. TRAINING PROGRAMS SPONSORED BY TRADE, LABOR OR STATE-WIDE ENERGY CONSULTING OR VERIFICATION ORGANIZATIONS.
4. PROGRAMS SPONSORED BY MANUFACTURING ORGANIZATIONS.
5. OTHER PROGRAMS ACCEPTABLE TO THE ENFORCING AGENCY

CAL GREEN CODE NONRESIDENTIAL MANDATORY MEASURES

DIVISION 5.4-MATERIAL CONSERVATION AND RESOURCE EFFICIENCY

5.410.2 COMMISSIONING. FOR NEW BUILDINGS 10,000 SQUARE FEET AND OVER, BUILDING COMMISSIONING SHALL BE INCLUDED IN THE DESIGN AND CONSTRUCTION PROCESSES OF THE BUILDING PROJECT TO VERIFY THAT THE BUILDING SYSTEMS AND COMPONENTS MEET THE OWNER'S OR OWNER REPRESENTATIVE'S PROJECT REQUIREMENTS.

REFER TO THE PROJECT SPECIFICATIONS FOR COMMISSIONING REQUIREMENTS.

5.410.4 TESTING AND ADJUSTING. TESTING AND ADJUSTING OF SYSTEMS SHALL BE REQUIRED FOR NEW BUILDINGS LESS THAN 10,000 SQUARE FEET OR NEW SYSTEMS TO SERVE AN ADDITION OR ALTERATION SUBJECT TO 2022 CGBSC 303.1.
5.410.4.2 SYSTEMS. DEVELOP A WRITTEN PLAN OF PROCEDURES FOR TESTING AND ADJUSTING SYSTEMS. SYSTEMS TO BE INCLUDED FOR TESTING AND ADJUSTING SHALL INCLUDE AT A MINIMUM, AS APPLICABLE TO THE PROJECT:
1. HVAC SYSTEMS AND CONTROLS
2. WATER HEATING SYSTEMS
3. WATER REUSE SYSTEMS
5.410.4.3 PROCEDURES. PERFORM TESTING AND ADJUSTING PROCEDURES IN ACCORDANCE WITH MANUFACTURER'S SPECIFICATIONS AND APPLICABLE STANDARDS ON EACH SYSTEM.

AT A MINIMUM THE MECHANICAL CONTRACTOR SHALL OBTAIN THE LATEST START-UP CHECK LIST(S) FROM THE EQUIPMENT MANUFACTURER AND PERFORM ALL TESTS AND CHECKS APPLICABLE. AFTER COMPLETION OF THE START-UP CHECK LIST THE MECHANICAL CONTRACTOR SHALL MAKE ADJUSTMENTS TO PUT THE EQUIPMENT IN PEAK WORKING ORDER. MECHANICAL CONTRACTOR SHALL DOCUMENT ALL WORK PERFORMED. CLOSE OUT DOCUMENTATION PROVIDED TO THE GENERAL CONTRACTOR SHALL INCLUDE ALL COMPLETED CHECK LIST(S) AND DOCUMENTATION FOR ANY WORK PERFORMED. THE GENERAL CONTRACTOR SHALL SUBMIT THE CHECK LIST(S) AND WORK DOCUMENTATION TO ENGINEER OF RECORD.

5.410.4.3.1 HVAC BALANCING. IN ADDITION TO TESTING AND ADJUSTING, BEFORE A NEW SPACE-CONDITIONING SYSTEM SERVING A BUILDING OR SPACE IS OPERATED FOR NORMAL USE, THE SYSTEM SHALL BE BALANCED IN ACCORDANCE WITH THE PROCEDURES DEFINED BY THE TESTING ADJUSTING AND BALANCING BUREAU NATIONAL STANDARDS; THE NATIONAL ENVIRONMENTAL BALANCING BUREAU PROCEDURAL STANDARDS; ASSOCIATED AIR BALANCE COUNCIL NATIONAL STANDARDS OR AS APPROVED BY THE BUILDING ENFORCING AGENCY.

SEE SPECIFICATION SECTION 23 00 13 FOR HVAC BALANCING REQUIREMENTS.

5.410.4.4 REPORTING. AFTER COMPLETION OF TESTING, ADJUSTING AND BALANCING, PROVIDE A FINAL REPORT OF TESTING SIGNED BY THE INDIVIDUAL RESPONSIBLE FOR PERFORMING THESE SERVICES.

5.410.4.5 OPERATION AND MAINTENANCE (O&M) MANUAL. PROVIDE THE BUILDING OWNER OR REPRESENTATIVE WITH DETAILED OPERATING AND MAINTENANCE INSTRUCTIONS AND COPIES OF GUARANTIES/WARRANTIES FOR EACH SYSTEM. O&M INSTRUCTIONS SHALL BE CONSISTENT WITH OSHA REQUIREMENTS IN CCR, TITLE 8, SECTION 5142, AND OTHER RELATED REGULATIONS.

5.410.4.5.1 INSPECTIONS AND REPORTS. INCLUDE A COPY OF ALL INSPECTION VERIFICATIONS AND REPORTS REQUIRED BY THE ENFORCING AGENCY.

DIVISION 5.5-ENVIRONMENTAL QUALITY

SECTION 5.504 POLLUTANT CONTROL

5.504.1 TEMPORARY VENTILATION. THE PERMANENT HVAC SYSTEM SHALL ONLY BE USED DURING CONSTRUCTION IF NECESSARY TO CONDITION THE BUILDING WITHIN THE REQUIRED TEMPERATURE RANGE FOR MATERIAL AND EQUIPMENT INSTALLATION. IF THE HVAC SYSTEM IS USED DURING CONSTRUCTION, USE RETURN AIR FILTERS WITH A MINIMUM EFFICIENCY REPORTING VALUE (MERV) OF 8, BASED ON ASHRAE 52.2-1999, OR AN AVERAGE EFFICIENCY OF 30% BASED ON ASHRAE 52.1-1992. REPLACE ALL FILTERS IMMEDIATELY PRIOR TO OCCUPANCY, OR, IF THE BUILDING IS OCCUPIED DURING ALTERATION, AT THE CONCLUSION OF CONSTRUCTION.

5.504.3 COVERING OF DUCT OPENINGS AND PROTECTION OF MECHANICAL EQUIPMENT DURING CONSTRUCTION. AT THE TIME OF ROUGH INSTALLATION AND DURING STORAGE ON THE CONSTRUCTION SITE UNTIL FINAL STARTUP OF THE HEATING, COOLING AND VENTILATING EQUIPMENT, ALL DUCT AND OTHER RELATED AIR DISTRIBUTION COMPONENT OPENINGS SHALL BE COVERED WITH TAPE, PLASTIC, SHEET METAL OR OTHER METHODS ACCEPTABLE TO THE ENFORCING AGENCY TO REDUCE THE AMOUNT OF DUST, WATER AND DEBRIS WHICH MAY ENTER THE SYSTEM.

5.504.4.1 ADHESIVES, SEALANTS AND CAULKS. ADHESIVES, SEALANTS, AND CAULKS USED ON THE PROJECT SHALL MEET THE REQUIREMENTS OF THE FOLLOWING STANDARDS:
1. ADHESIVES, ADHESIVE BONDING PRIMERS, ADHESIVE PRIMERS, SEALANTS, SEALANT PRIMERS AND CAULKS SHALL COMPLY WITH LOCAL OR REGIONAL AIR POLLUTION CONTROL OR AIR QUALITY MANAGEMENT DISTRICT RULES WHERE APPLICABLE, OR SCAQMD RULE 1168 VOC LIMITS, AS SHOWN IN TABLES 5.504.4.1 AND 5.504.4.2. SUCH PRODUCTS ALSO SHALL COMPLY WITH THE RULE 1168 PROHIBITION ON THE USE OF CERTAIN TOXIC COMPOUNDS (CHLOROFORM, ETHYLENE DICHLORIDE, METHYLENE CHLORIDE, PERCHLOROETHYLENE AND TRICHLOROETHYLENE), EXCEPT FOR AEROSOL PRODUCTS AS SPECIFIED IN SUBSECTION 2, BELOW.
2. AEROSOL ADHESIVES, AND SMALLER UNIT SIZES OF ADHESIVES, AND SEALANT OR CAULKING COMPOUNDS (IN UNITS OF PRODUCT, LESS PACKAGING, WHICH DO NOT WEIGH MORE THAN ONE POUND AND DO NOT CONSIST OF MORE THAN 16 FLUID OUNCES) SHALL COMPLY WITH STATEWIDE VOC STANDARDS AND OTHER REQUIREMENTS, INCLUDING PROHIBITIONS ON USE OF CERTAIN TOXIC COMPOUNDS, OF CALIFORNIA CODE OF REGULATIONS, TITLE 17, COMMENCING WITH SECTION 94507.

TABLE 5.504.4.1 ADHESIVE VOC LIMIT
LESS WATER AND LESS EXEMPT COMPOUNDS IN GRAMS PER LITER

SPECIALTY APPLICATIONS	CURRENT VOC LIMIT
PVC WELDING	510
CPVC WELDING	490
ABS WELDING	325
SPECIAL PURPOSE CONTACT ADHESIVE	250

1. IF AN ADHESIVE IS USED TO BOND DISSIMILAR SUBSTRATES TOGETHER THE ADHESIVE WITH THE HIGHEST VOC CONTENT SHALL BE ALLOWED.
2. FOR ADDITIONAL INFORMATION REGARDING METHODS TO MEASURE THE VOC CONTENT SPECIFIED IN THIS TABLE, SEE SOUTH COAST AIR QUALITY MANAGEMENT DISTRICT RULE 1168, HTTP://WWW.ARB.CA.GOV/DRDB/SC/CURHTML/R1168.PDF.

PLUMBING GENERAL NOTES

1 COMPLY WITH THE REQUIREMENTS OF THE FOLLOWING CODES:

2022 CALIFORNIA ADMINISTRATIVE CODE (CAC): PART 1, TITLE 24, CALIFORNIA CODE OF REGULATIONS (CCR)
2022 CALIFORNIA BUILDING CODE (CBC): PART 2, TITLE 24 CCR
2022 CALIFORNIA ELECTRICAL CODE (CEC): PART 3, TITLE 24 CCR
2022 CALIFORNIA MECHANICAL CODE (CMC): PART 4, TITLE 24 CCR
2022 CALIFORNIA PLUMBING CODE (CPC): PART 5, TITLE 24 CCR
2022 CALIFORNIA ENERGY CODE (CENC): PART 6, TITLE 24 CCR
2022 CALIFORNIA FIRE CODE (CFC): PART 9, TITLE 24 CCR
2022 CALIFORNIA GREEN BUILDING STANDARDS CODE (CAL GREEN): PART 11, TITLE 24 CCR

REPORT DEFICIENCIES WITHIN THIRTY (30) DAYS UPON AUTHORIZATION TO PROCEED.

2 NO PLUMBING SHALL BE INSTALLED UNTIL ALL REQUIRED PLUMBING PLAN CHECK PERMITS AND APPROVALS HAVE BEEN OBTAINED FROM ALL REQUIRED AGENCIES.
3 LAVATORY FAUCETS, SINK FAUCETS (NOT INCLUDING SERVICE SINK FAUCETS OR FAUCETS DESIGNATED AS INSTITUTIONAL) SHALL MEET THE FLOW REQUIREMENTS OUTLINED IN THE APPLIANCE EFFICIENCY STANDARDS.
4 COORDINATE WITH THE ARCHITECTURAL DRAWINGS FOR EXACT LOCATION OF PLUMBING FIXTURES AND DRAINS.
5 PROVIDE ALL TAILPIECES, TRAPS, STOPS, AND SUPPLY PIPES TO LAVATORIES DESIGNED AS ACCESSIBLE, WITH PREFORMED INSULATION JACKET.
6 COORDINATE AND SCHEDULE TIMING FOR ALL UTILITY SERVICE CONNECTIONS.
7 ALL LINES BELOW SLAB ON GRADE TO BE LOCATED AWAY FROM ALL LOAD BEARING FOOTINGS.
8 ALL VENTS THRU ROOF SHALL BE MINIMUM OF 36 INCHES ABOVE AND MECHANICAL VENTILATION AIR INTAKE WITHIN 10 FEET. PROVIDE VANDAL PROOF HOODS ON ALL VENTS THROUGH ROOF.
9 CONTRACTOR SHALL BE RESPONSIBLE FOR ALL CUTTING AND PATCHING OF WALLS, ROOFS, FOOTINGS, FLOORS, INCLUDING ALL SAW CUTTING AND CORE DRILLING. COORDINATE ALL SAW CUTTING AND CORE DRILLING WITH STRUCTURAL DRAWINGS. ANY CUTTING AND DRILLING REQUIRED OF STRUCTURAL ELEMENTS THAT IS NOT SPECIFICALLY SHOWN ON THE PLANS SHALL BE BROUGHT TO THE ARCHITECTS ATTENTION PRIOR TO CUTTING AND DRILLING. CONTRACTOR SHALL SUBMIT PROPOSED LOCATION AND SIZES OF SUCH CUTTING AND DRILLING FOR THE ARCHITECTS AND STRUCTURAL ENGINEERS APPROVAL.
10 COORDINATE ALL EQUIPMENT LOCATIONS, PIPE PENETRATIONS AND EQUIPMENT PAD LOCATIONS WITH STRUCTURAL DRAWING PRIOR TO WORK.
11 COORDINATE INSTALLATION OF ALL EQUIPMENT AND PIPING WITH OTHER TRADES PRIOR TO INSULATION. ENSURE THAT ALL CONTROL DEVICES, SHUT-OFF VALVES, ETC. ARE ACCESSIBLE FOR MAINTENANCE. WHERE ACCESS PANELS IN FINISHED SPACES, OTHER THAN THAT SHOWN, CONTRACTOR SHALL PROVIDE AND COORDINATE EXACT LOCATION OF PANELS WITH ARCHITECT PRIOR TO INSTALLATION.
12 ANY STRUCTURAL FIREPROOFING DAMAGED DURING INSTALLATION OF PLUMBING EQUIPMENT, PIPING, ETC. SHALL BE REPAIRED AT NO COST TO THE OWNER. REPAIRS SHALL BE AS DIRECTED BY THE ARCHITECT.
13 ALL PIPING PASSING THROUGH CONCRETE/MASONRY WALLS AND FLOORS ARE TO BE SLEEVED.
14 NEW OR REPAIRED POTABLE WATER SYSTEMS SHALL BE DISINFECTED PRIOR TO USE PER 2022 CPC 609.10. THE METHOD TO BE FOLLOWED SHALL BE THAT PRESCRIBED BY THE HEALTH AUTHORITY OR, IN CASE NO METHOD IS PRESCRIBED BY IT, THE FOLLOWING:
A) THE PIPE SYSTEM SHALL BE FLUSHED WITH CLEAN, POTABLE WATER UNTIL POTABLE WATER APPEARS AT THE POINTS OF OUTLET.
B) THE SYSTEM OR PARTS THEREOF SHALL BE FILLED WITH A WATER-CHLORINE SOLUTION CONTAINING NOT LESS THAN 50 PARTS PER MILLION OF CHLORINE, AND THE SYSTEM OR PART THEREOF SHALL BE VALVED-OFF AND ALLOWED TO STAND FOR 24 HOURS; OR, THE SYSTEM OF PART THEREOF SHALL BE FILLED WITH A WATER-CHLORINE SOLUTION CONTAINING NOT LESS THAN 200 PARTS PER MILLION OF CHLORINE AND ALLOWED TO STAND FOR 3 HOURS.
C) FOLLOWING THE ALLOWED STANDING TIME, THE SYSTEM SHALL BE FLUSHED WITH CLEAN, POTABLE WATER UNTIL THE CHLORINE RESIDUAL IN THE WATER COMING FROM THE SYSTEM DOES NOT EXCEED THE CHLORINE RESIDUAL IN THE FLUSHING WATER.
D) THE PROCEDURE SHALL BE REPEATED WHERE IT IS SHOWN BY BACTERIOLOGICAL EXAMINATION MADE BY AN APPROVED AGENCY THAT CONTAMINATION PERSISTS IN THE SYSTEM.
15 PRIOR TO APPLYING TEST PRESSURE TO ANY PIPING SYSTEM, THE CONTRACTOR SHALL BE RESPONSIBLE FOR ISOLATING ALL EQUIPMENT, E.G. CONTROL VALVES, REGULATORS, RELIEF DEVICES, TANKS, AND ANY OTHER LINE ACCESSORIES, WHICH WOULD OTHERWISE BE DAMAGED BY THE TEST PRESSURE.
A) SOIL, WASTE, VENT, ROOF AND CONDENSATE DRAINAGE:
I - ENTIRE SYSTEM: TIGHTLY CLOSE ALL OPENINGS EXCEPT THE HIGHEST ONE. FILL TO OVERFLOWING WITH WATER.
II - SECTIONS OF SYSTEM: TIGHTLY CLOSE ALL OPENINGS EXCEPT THE HIGHEST OPENING OF THE SECTION UNDER TEST. FILL SECTION WITH WATER TO TEST EACH SECTION WITH A MINIMUM 10-FOOT HEAD OF WATER EXCEPT FOR THE UPPERMOST 10 FEET OF THE SYSTEM.
III - ALLOW TO STAND FOR FOUR HOURS OR LONGER, AS REQUIRED TO COMPLETE.
B) DOMESTIC WATER: FILL WITH WATER AND TEST AT 150 PSIG. RETAIN FOR FOUR HOURS.

PLUMBING TITLE 24 NOTES

1 PROVIDE WATER HEATERS CERTIFIED IN COMPLIANCE WITH CALIFORNIA ENERGY APPLIANCE EFFICIENCY STANDARDS.
2 PROVIDE DOMESTIC HOT WATER PIPING INSULATION IN ACCORDANCE WITH THE CALIFORNIA ENERGY EFFICIENCY STANDARDS.

WATER & SEWER SIZING TABLE

PIPING SIZED PER 2022 CPC

DOMESTIC WATER SERVICE

TOTAL WATER SUPPLY FIXTURE UNITS			FT/FV	GPM	PIPE SIZE (INCHES)	METER SIZE (INCHES)	INCOMING PSI	REGULATED PSI	PSI/100'
96			FLUSH VALVE	66.3	2	2	53	Not Regulated	8
MAXIMUM FIXTURE UNITS ALLOWED	PIPE SIZE (INCHES)	1/2	3/4	1	1-1/4	1-1/2	2	2-1/2	3
	FLUSH VALVES (8 FPS MAX.)	0	0	0	12	35	132	329	666
	FLUSH TANK (8 FPS MAX.)	3	10	23	51	103	254	455	719
	HOT WATER (5 FPS MAX.)	3	8	16	28	46	119	245	406

SEWER LINE

TOTAL DRAINAGE FIXTURE UNITS	PIPE SIZE REQUIRED (INCHES)	PIPE SIZE PROVIDED (INCHES)	BUILDING DRAIN SLOPE	BUILDING SEWER SLOPE
88.75	4	4	2%	SEE CIVIL

WATER PIPE SIZING CRITERIA CALCULATION

ELEMENT	PRESSURE (PSI)	PRESSURE (FT H2O)
STATIC PRESSURE IN MAIN	53.0	122.3
LOSS THROUGH METER	3.7	8.5
LOSS THROUGH BACKFLOW PREVENTER	12.0	27.7
PRESSURE LOSS THROUGH PRV	0.0	0.0
OTHER DOWNSTREAM PRESSURE LOSSES (BOOSTER PUMP)	-50.0	-115.3
PRESSURE LOSS THROUGH ELEVATION HEAD (@0.434 PSI PER FOOT H2O) (IF LOSS IS NEGATIVE, THIS INDICATES FINAL FIXTURE IS LOWER THAN THE MAIN LINE AND THERE IS A GAIN IN PRESSURE)	3.0	7.0
PRESSURE REQUIRED AT FINAL FIXTURE	25.0	57.7
REMAINING PRESSURE FOR FRICTION LOSSES	59.3	136.7
NOMINAL DISTANCE BETWEEN MAIN AND FINAL FIXTURE (FT)	403.0	
TOTAL DEVELOPED LENGTH BETWEEN MAIN AND FINAL FIXTURE (FT) (ACCOUNTING FOR MINOR LOSSES WITH NOMINAL DISTANCE X 1.4)	564.2	
PRESSURE SIZING CRITERIA (PSI LOSS / 100'-0" OF PIPING)	8.0	
PRESSURE SIZING CRITERIA (FT H2O LOSS / 100'-0" OF PIPING)	18.4	
CW VELOCITY SIZING CRITERIA (FT/S)	8.0	
HW VELOCITY SIZING CRITERIA (FT/S)	5.0	
ASSUMED GPM FROM FIXTURE UNIT COUNT	66.3	

DOMESTIC WATER PIPING IS SIZED BASED ON PRESSURE LOSS IN PSI PER 100 FEET OF PIPING. IF THE ALLOWABLE PRESSURE LOSS STATED ABOVE IS GREATER THAN 8 PSI PER 100 FEET OF PIPE, SIZING SHALL BE BASED ON A PRESSURE LOSS OF 8 PSI PER 100 FEET OF PIPE WITH A MAXIMUM VELOCITY OF 8 FEET PER SECOND FOR COLD WATER AND 5 FEET PER SECOND FOR HOT WATER.

PROJECT TEAM LIST

TITLE	NAME	DESK NUMBER	EMAIL ADDRESS
PRINCIPAL IN CHARGE	BRIAN STARRETT	805.540.5358	BSTARRETT@3CENG.COM
PROJECT MANAGER	DENVER STANGER	805.540.5388	DSTANGER@3CENG.COM
MECHANICAL DESIGNER	BEN SWANSON	805.540.3363 EXT 317	BSWANSON@3CENG.COM
PLUMBING DESIGNER	RANDY CARMINATI	805.540.3363 EXT 319	RCARMINATI@3CENG.COM
ENERGY COMPLIANCE	DANICA RESURRECCION	805.540.3363 EXT 313	DRESURRECCION@3CENG.COM

SHEET LIST

SHEET NUMBER	SHEET TITLE
P-000	PLUMBING GENERAL
P-001	PLUMBING SCHEDULES
P-002	PLUMBING DETAILS
P-003	PLUMBING DETAILS
P-200	PLUMBING FLOOR PLAN
P-201	PLUMBING FLOOR PLANS - ENLARGED
P-202	PLUMBING FLOOR PLANS - ENLARGED
P-300	PLUMBING ROOF PLAN

rrm design group
rrmdesign.com | (805) 543-1794
3765 S. Higuera, San Luis Obispo, CA 93401

THE INCLUDED DRAWINGS, SPECIFICATIONS, IDEAS, DESIGNS AND ARRANGEMENTS REPRESENTED THEREBY ARE AND SHALL REMAIN THE PROPERTY OF RRM DESIGN GROUP AND NO PART THEREOF SHALL BE COPIED, DISCLOSED TO OTHERS OR USED IN CONNECTION WITH ANY WORK OR PROJECT OTHER THAN THE SPECIFIED PROJECT FOR WHICH THEY HAVE BEEN PREPARED AND DEVELOPED WITHOUT THE WRITTEN CONSENT OF RRM DESIGN GROUP. VISUAL CONTACT WITH THESE DRAWINGS OR SPECIFICATIONS SHALL CONSTITUTE CONCLUSIVE EVIDENCE OF ACCEPTANCE OF THESE RESTRICTIONS. SUBMITTAL OF THESE DOCUMENTS FOR PUBLIC AGENCY REVIEW SHALL NOT BE CONSIDERED A WAIVER OF RRM DESIGN GROUP'S RIGHTS.
RRM DESIGN GROUP COPYRIGHT 2021
RRM IS A CALIFORNIA CORPORATION

REGISTERED PROFESSIONAL ENGINEER BRIAN P. STARRETT M 34068 EXP. 6/30/24 MECHANICAL STATE OF CALIFORNIA

CONSULTANT

3C | ENGINEERING
SMARTER BUILDINGS BY DESIGN
805. 540. 3363 WWW.3CENG.COM
1500 PALM ST. SAN LUIS OBISPO, CA 93401

BY 3C Engineering, Inc., ALL COMMON LAW COPYRIGHT AND OTHER PROPERTY RIGHTS RESERVE THIS DOCUMENT AS AN ORIGINAL AND UNPUBLISHED WORK PRODUCT. THIS WORK SHALL NOT BE DUPLICATED, COPIED, DISCLOSED OR USED IN CONNECTION WITH ANY WORK OR PROJECT OTHER THAN THE SPECIFIC PROJECT FOR WHICH IT AS BEEN PREPARED, NOR SHALL IT BE ASSIGNED TO ANY THIRD PARTY WITHOUT FIRST OBTAINING THE EXPRESS WRITTEN CONSENT OF VISUAL CONTACT. THIS DOCUMENT SHALL CONSTITUTE CONCLUSIVE EVIDENCE OF ACCEPTANCE OF THESE RESTRICTIONS.

AGENCY

FOURTH ST COMMUNITY CENTER AND PARK

HENDERSON AVE., PORTERVILLE, CA 93257

PLUMBING GENERAL

NO.	REVISION	DATE
1	PLAN CHECK REVISION 1	5/17/24

PROJECT MANAGER DS

DRAWN BY BS **CHECKED BY** BS

DATE 2024.05.17

PROJECT NUMBER 2883-01-RC22

SHEET P-000

100% CONSTRUCTION DOCUMENTS

C:\Users\eferman\appdata\local\temp\AcPublish_9044\Porterville Community Center Plumbing Lead.dwg eferman May 15,2024-1:52pm

BOOSTER PUMP SCHEDULE

TAG	MAKE	MODEL	MATERIAL	PUMP				TOTAL FEET OF HEAD	SUCTION (PSI)	BOOST (PSI)	SET (PSI)	ELECTRICAL DATA			REMARKS SEE BELOW	INSTALLATION DETAIL
				QTY	HP	RPM	GPM					V/PH/HZ	AMPS	MOCP		
BP 1	QUANTUMFLO	PRODIGY DUPLEX QES_ 331-3-2-6.30	STAINLESS STEEL	2	1.5	3341.25	27.5	115.87	26	50.16	71.16	460/3/60	10.2	30	1, 2, 3, 4, 5, 6, 7, 8, 9, 10, 11	SEE DETAIL 7/P-002

NOTES:
1. NET BOOST PRESSURE IS CALCULATED BY SYSTEM SET PRESSURE MINUS SUCTION PRESSURE LESS SYSTEM LOSSES OF 5 PSI
2. SYSTEM SUBMITTALS SHALL INCLUDE CERTIFICATE NUMBER FOR NSF61 CERTIFICATION, UL508A AND QCZJ 3RD PARTY COMPLIANCE.
3. SYSTEM CONTROLS MUST COMPLY WITH AND PROVIDE FOR EITHER CONTROL LOGIC OR REMOTE SENSOR IN ACCORDANCE WITH ANSI/ASHRAE/IES STANDARD 90.1 ENERGY STANDARD
4. PROVIDE 5-YEAR WARRANTY ON COMPLETE SYSTEM AND INCLUDE WARRANTY CERTIFICATE WITH DETAILS IN SUBMITTALS
5. SYSTEM SHALL BE PRE-SET BY THE FACTORY TO SYSTEM SITE CONDITIONS BY SIMULATING SUCTION PRESSURE. HYDROSTATIC-ONLY TESTING IS NOT ACCEPTABLE.
6. THE INDUSTRIAL CONTROLLER SHALL BE IN COMPLIANCE WITH CURRENT NEC, SECTION 409.110 HAVING A MAXIMUM 100K AVAILABLE FAULT CURRENT.
7. SCCR RATINGS MUST BE INCLUSIVE OF ALL COMPONENTS WITHIN THE ENCLOSURE WITHOUT THE NEED TO PROVIDE ADDITIONAL UPSTREAM PROTECTION.
8. EQUAL SYSTEMS MUST SHOW MATHEMATICAL ANALYSIS PROVING THAT THE ALTERNATE SUPPLIER MEETS OR EXCEEDS THE KW CAPACITY LISTED.
9. PROVIDE THE FOLLOWING OPTIONS: GENERAL ALARM DRY CONTACT RELAY; MONITORS: SENSOR FAIL, LOW SUCTION/LEVEL & HIGH SYSTEM AND VFD FAULTS, VIBRATION ISOLATION KIT
10. REPRESENTATIVE: SPECIFICATION SALES. PHONE: 909-594-7088
11. BASED ON PROJECT: PORTERVILLE COMMUNITY CENTER (036060)

HEAT PUMP - ELECTRIC STORAGE WATER HEATER SCHEDULE

TAG	MAKE	MODEL	STORAGE (GALLONS)	DIMENSIONS (Ø" x HEIGHT")	INLET CONNECTION (INCHES)	SET TEMP °F	UEF	INSTALLATION LOCATION	ELECTRICAL DATA		OPERATING WEIGHT (LBS)	NOTES (SEE BELOW)	INSTALLATION DETAIL
									POWER V/ϕ/HZ	MOCP			
WH 1	RHEEM	PRO H50 T2RH375-SO	50	22-1/4"Ø X 61"	3/4	120	3.5	MECHANICAL / 110	208/1/60	30	600	1	5/P-002

NOTES: 1. DISCONNECT PROVIDED BY ELECTRICAL CONTRACTOR.

CIRCULATION PUMP SCHEDULE

TAG	MAKE	MODEL	MOTOR TYPE	GPM	FEET OF HEAD	INLET WATER TEMP °F	ELECTRICAL DATA		OPERATING WEIGHT LBS	REMARKS SEE BELOW	INSTALLATION DETAIL
							POWER V/ϕ/HZ	WATTS			
CP 1	BELL & GOSSETT	E3-6V/BUPRC	ECM	5	5	110	120/1/60	27		1, 2	5/P-002

GENERAL NOTES APPLICABLE TO ALL UNITS:
A. DISCONNECT PROVIDED AND INSTALLED BY ELECTRICAL CONTRACTOR.

UNIT SPECIFIC NOTES:
1. PROVIDE WITH E3 TIMER KIT.
2. 120 VOLT RECEPTACLE PROVIDED BY ELECTRICAL CONTRACTOR. CONTRACTOR SHALL REVIEW OWNERS MANUAL OF EQUIPMENT PRIOR TO INSTALLATION OF RECEPTACLE FOR PROPER OUTLET RATING.

PLUMBING FIXTURE SCHEDULE

TAG	FIXTURE	BRANCH SIZE				ELECTRICAL	MODEL & FITTINGS
		W	V	CW	HW		
DF-1	DRINKING FOUNTAIN - ACCESSIBLE	2"	1-1/2"	1/2"	NA	NA	HAWS #1117LN, IN-WALL MOUNTED, DUAL HEIGHT, STAINLESS STEEL PUSH BUTTON DRINKING FOUNTAIN, 36" STAINLESS STEEL PANEL. PROVIDE WITH STOPS AND SUPPLIES, INSTALL PER ACCESSIBLE FACILITIES REQUIREMENTS.
FD-1	FLOOR DRAIN	2"	1-1/2"	NA	NA	NA	WATTS #FD-100-A-2-NH-A5-6-7, 5"Ø, CAST IRON W/ROUND BRONZE STRAINER. PROVIDE WITH VANDAL PROOF SCREWS, HEEL PROOF STRAINER AND TRAP PRIMER CONNECTION. SEE DETAIL 4/P-002 FOR TRAP PRIMER INFORMATION.
FS-1	FLOOR SINK	2"	1-1/2"	NA	NA	NA	WATTS #FS-730-2-NH-150, 12"X12"X6-1/4" ENAMELED CAST IRON W/HALF GRATE AND DOME STRAINER.
HB-1	HOSE BIBB	NA	NA	3/4"	NA	NA	WALL MOUNT, WOODFORD #24-3/4-PC, POLISHED CHROME BRASS WITH VACUUM BREAKER. PROVIDE W/LOOSE TEE KEY
HB-2	HOSE BIBB	NA	NA	1"	NA	NA	ROOF MOUNTED, WOODFORD #RHY2-1-MS, FREEZE-LESS W/ VACUUM BREAKER.
LAV-1	LAVATORY - ACCESSIBLE	2"	1-1/2"	1/2"	1/2"	BATTERY	WALL MOUNT, ACORN DURA-WARE #1953-MVC2-DMS-H1-GT-OF-TE, STAINLESS STEEL. PROVIDED WITH METERING FAUCET, 0.35 GPM, GRID STRAINER W/TAILPIECE, LAVATORY OVERFLOW, STOPS, SUPPLIES, & WALL SUPPORT. INSTALL PER ACCESSIBLE FACILITIES REQUIREMENTS. PROVIDE POINT OF USE THERMOSTATIC MIXING VALVE, WATTS MINIMIXING OR APPROVED EQUAL. THERMOSTATIC MIXING VALVE SHALL LIMIT OUTLET TEMPERATURE TO 110°F AND BE ASSE 1070 COMPLIANT.
LAV-2	LAVATORY - ACCESSIBLE	2"	1-1/2"	1/2"	1/2"	BATTERY	COUNTER MOUNT, SLOAN #SS-3002, 19-1/4" X 16-1/4", VITREOUS CHINA, OVAL, WHITE. SLOAN FAUCET #EBF-85, 0.35 GPM, SENSOR OPERATED. PROVIDE STOPS, SUPPLIES, C.P. BRASS "P" TRAP, & WATTS WALL SUPPORT #TCA-411. INSTALL PER ACCESSIBLE FACILITIES REQUIREMENTS. PROVIDE POINT OF USE THERMOSTATIC MIXING VALVE, WATTS MINIMIXING OR APPROVED EQUAL. THERMOSTATIC MIXING VALVE SHALL LIMIT OUTLET TEMPERATURE TO 110°F AND BE ASSE 1070 COMPLIANT.
MSK-1	MOP SINK	3"	2"	3/4"	3/4"	NA	FLOOR MOUNTED, ZURN #Z5850-D3, 28"X28"X13", TERRAZZO, CORNER PLACEMENT, WITH T&S BRASS FAUCET #B-0665-BSTP-963, PROVIDE WITH VACUUM BREAKER, DRAIN, RIM GUARD, HOSE, MOP HANGER AND WALL GUARDS
RD-1	ROOF DRAIN & OVERFLOW COMBO	3"	NA	NA	NA	NA	FLUSH MOUNTED, WATTS #RD-700-F-W2, 21"L X 13-1/16"W X 5-1/16"T(ABOVE ROOF). CAST IRON BODY WITH DUCTILE IRON DOME AND NO HUB CONNECTIONS. OVERFLOW PROVIDED WITH 2" WATER DAM.
UR-1	URINAL	2"	1-1/2"	1-1/4"	NA	BATTERY	WALL MOUNTED, ACORN #1709HEU-T-1-0.125 GPF-FVL-, STAINLESS STEEL. PROVIDE WITH FLUSH VALVE, 0.125 GPF. INSTALL PER ACCESSIBLE FACILITIES REQUIREMENTS.
UR-2	URINAL	2"	1-1/2"	1-1/4"	NA	BATTERY	WALL MOUNTED, SLOAN #WEUS-7000.1201, 14-3/4"X14-1/4"X23-1/2", VITREOUS CHINA, WHITE. PROVIDE WITH SENSOR OPERATED SLOAN "SOLIS" FLUSH VALVE #8186, 0.125 GPF. INSTALL PER ACCESSIBLE FACILITIES REQUIREMENTS.
WC-1	WATER CLOSET - ADA	3"	2"	1-1/4"	NA	NA	WALL MOUNTED, ACORN DURA-WARE #2100-T-1-HET-FVBO-HS-OFLC, 14 GA.STAINLESS STEEL. PROVIDE WITH SLOAN #113, 1.28 GPF TOP MOUNTED FLUSH VALVE, ELONGATED BOWL, HINGED SEAT, OPEN FRONT LESS COVER. INSTALL PER ADA REQUIREMENTS.
WC-2	WATER CLOSET	3"	2"	1-1/4"	NA	NA	WALL MOUNTED, ACORN DURA-WARE #2100-T-1-HET-FV-HS-OFLC, 14 GA.STAINLESS STEEL, 1.28 GPF TOP MOUNTED FLUSH VALVE, ELONGATED BOWL, HINGED SEAT, OPEN FRONT LESS COVER.
WC-3	WATER CLOSET - ACCESSIBLE	3"	2"	1-1/4"	NA	BATTERY	FLOOR MOUNTED, SLOAN #WETS-2021.1201, ELONGATED, SENSOR OPERATED, 26-3/4"X14"X17" RIM, VITREOUS CHINA, WHITE. PROVIDE WITH SLOAN FLUSH VALVE #8111-1.1-OR, 1.1 GPF AND & BEMIS OPEN FRONT SEAT #1955SSCT-000. INSTALL PER ACCESSIBLE FACILITIES REQUIREMENTS, LOCATE HANDLE ON WIDE SIDE OF FIXTURE
WC-4	WATER CLOSET	3"	2"	1-1/4"	NA	BATTERY	FLOOR MOUNTED, SLOAN #WETS-2001.1201, ELONGATED, SENSOR OPERATED, 26-3/4"X14"X15" RIM, VITREOUS CHINA, WHITE. PROVIDE WITH SLOAN FLUSH VALVE #8111-1.1-OR, 1.1 GPF AND & BEMIS OPEN FRONT SEAT #1955SSCT-000. INSTALL PER ACCESSIBLE FACILITIES REQUIREMENTS, LOCATE HANDLE ON WIDE SIDE OF FIXTURE

NOTES:
1. CONTRACTOR SHALL SUBMIT CATALOG CUT SHEETS TO THE ARCHITECT AND OWNER FOR APPROVAL, PRIOR TO PURCHASING FIXTURES. DATA GIVEN IN SCHEDULE PROVIDES CODE REQUIRED FLOW RATES AND MINIMUM BRANCH PIPING SIZES.
2. BRANCH LINE SIZE MINIMUMS ARE TO BE AS SPECIFIED IN THIS CHART UNLESS OTHERWISE NOTED.

rrm design group
rrmdesign.com | (805) 543-1794
3765 S. Higuera, San Luis Obispo, CA 93401

THE INCLUDED DRAWINGS, SPECIFICATIONS, IDEAS, DESIGNS AND ARRANGEMENTS REPRESENTED THEREBY ARE AND SHALL REMAIN THE PROPERTY OF RRM DESIGN GROUP AND NO PART THEREOF SHALL BE COPIED, DISCLOSED TO OTHERS OR USED IN CONNECTION WITH ANY WORK OR PROJECT OTHER THAN THE SPECIFIED PROJECT FOR WHICH THEY HAVE BEEN PREPARED AND DEVELOPED WITHOUT THE WRITTEN CONSENT OF RRM DESIGN GROUP. VISUAL CONTACT WITH THESE DRAWINGS OR SPECIFICATIONS SHALL CONSTITUTE CONCLUSIVE EVIDENCE OF ACCEPTANCE OF THESE RESTRICTIONS. SUBMITTAL OF THESE DOCUMENTS FOR PUBLIC AGENCY REVIEW SHALL NOT BE CONSIDERED A WAIVER OF RRM DESIGN GROUP'S RIGHTS.
RRM DESIGN GROUP COPYRIGHT 2021
RRM IS A CALIFORNIA CORPORATION

REGISTERED PROFESSIONAL ENGINEER BRIAN P. STARRETT M 34068 EXP. 6/30/24 MECHANICAL STATE OF CALIFORNIA

CONSULTANT

3C | ENGINEERING
SMARTER BUILDINGS BY DESIGN
805. 540. 3363 WWW.3CENG.COM
1500 PALM ST. SAN LUIS OBISPO, CA 93401

BY 3C Engineering, Inc., ALL COMMON LAW COPYRIGHT AND OTHER PROPERTY RIGHTS RESERVE THIS DOCUMENT AS AN ORIGINAL AND UNPUBLISHED WORK PRODUCT. THIS WORK SHALL NOT BE DUPLICATED, COPIED, DISCLOSED OR USED IN CONNECTION WITH ANY WORK OR PROJECT OTHER THAN THE SPECIFIC PROJECT FOR WHICH IT AS BEEN PREPARED, NOR SHALL IT BE ASSIGNED TO ANY THIRD PARTY WITHOUT FIRST OBTAINING THE EXPRESS WRITTEN CONSENT OF VISUAL CONTACT. THIS DOCUMENT SHALL CONSTITUTE CONCLUSIVE EVIDENCE OF ACCEPTANCE OF THESE RESTRICTIONS.

AGENCY

FOURTH ST COMMUNITY CENTER AND PARK
HENDERSON AVE., PORTERVILLE, CA 93257
PLUMBING SCHEDULES

NO.	REVISION	DATE
1	PLAN CHECK REVISION 1	5/17/24

100% CONSTRUCTION DOCUMENTS

PROJECT MANAGER: DS
DRAWN BY: BS
CHECKED BY: BS
DATE: 2024.05.17
PROJECT NUMBER: 2883-01-RC22
SHEET: P-001

C:\Users\eferman\appdata\local\temp\AcPublish_9044\Porterville Community Center Plumbing Lead.dwg eferman May 15,2024-1:52pm

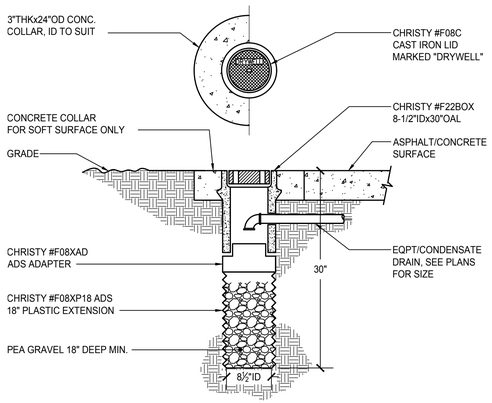

10 DRYWELL

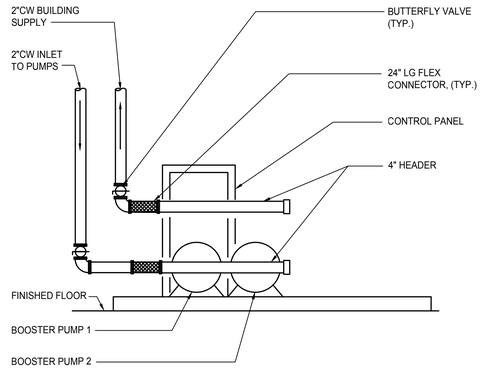

7 BOOSTER PUMP SYSTEM DETAIL
NTS

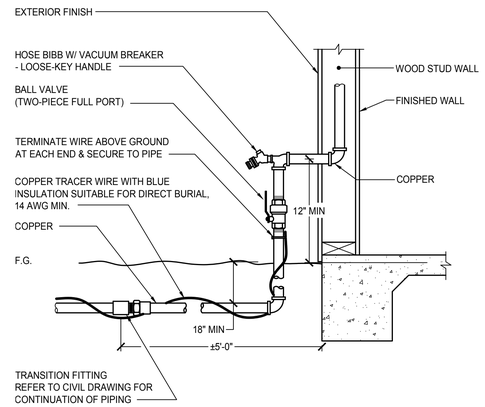

3 BUILDING WATER SUPPLY
NTS

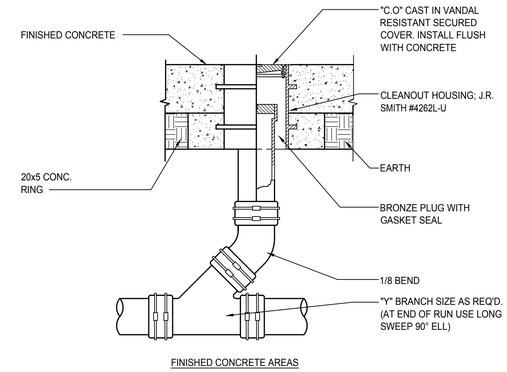

FINISHED CONCRETE AREAS

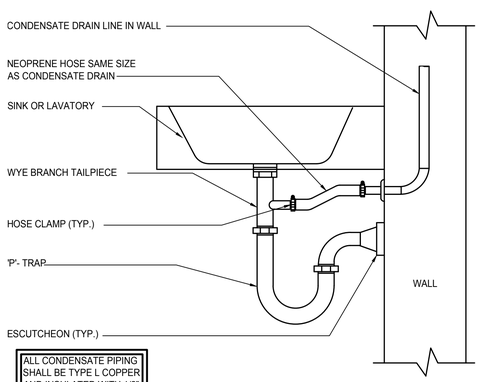

11 CONDENSATE TO TAIL PIECE DETAIL
NTS

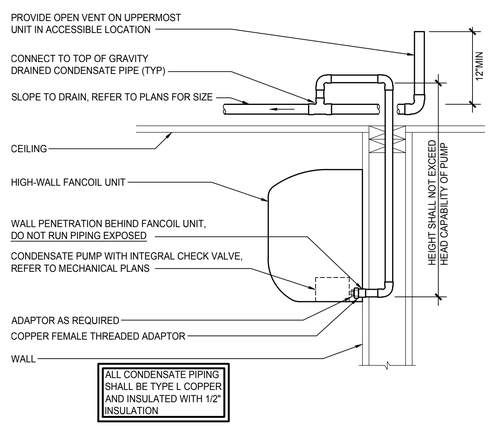

8 HIGH-WALL FANCOIL CONDENSATE DRAIN
NTS

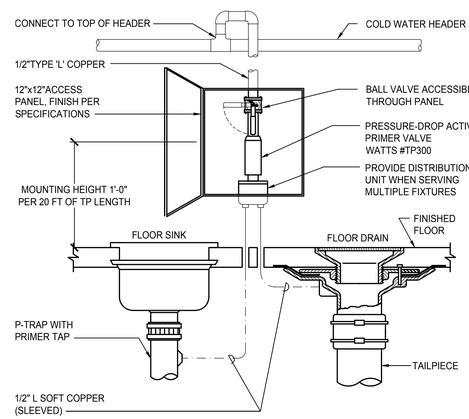

4 TRAP PRIMER
NTS

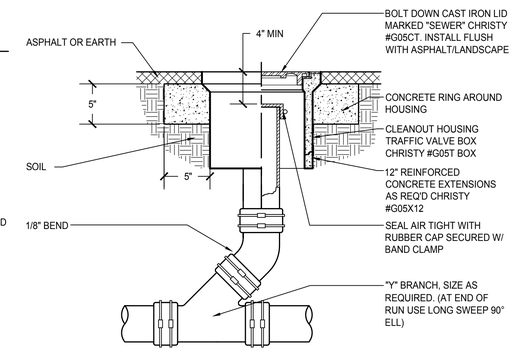

ASPHALT & LANDSCAPED AREAS

CLEANOUTS IN PIPING 2" OR LESS SHALL HAVE A CLEARANCE OF NOT LESS THAN 18" X 18" IN FRONT OF THE CLEANOUT, CLEANOUTS IN PIPING LARGER THAN 2" INCHES SHALL HAVE A CLEARANCE OF NOT LESS THAN 24" X 24".		
CLEANOUTS: CPC TABLE 707.1		
PIPE SIZE	CLEANOUT SIZE	THREADS (PER INCH)
1-1/2" - 2"	1-1/2"	11-1/2
2-1/2" - 3"	2-1/2"	8
4" & LARGER	3-1/2"	8

1 CLEANOUT TO GRADE
NTS

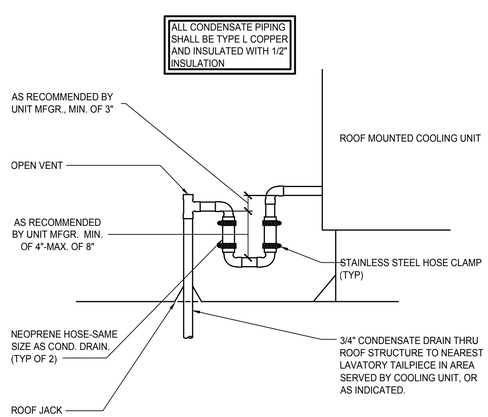

9 UNIT CONDENSATE DRAIN
NTS

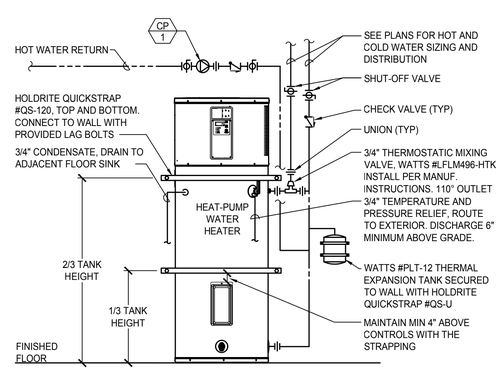

NOTES:
1. COORDINATE ALL ELECTRICAL CONNECTIONS AND POWER REQUIREMENTS WITH ELECTRICAL CONTRACTOR.
2. WHEN INSTALLED IN A CLOSET OR CONFINED SPACE, WATER HEATER SHALL BE PROVIDED WITH DUCTING PER MANUFACTURERS REQUIREMENTS.

5 HEATPUMP WATER HEATER DETAIL
NTS

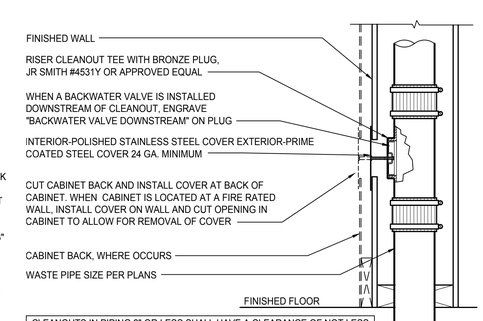

CLEANOUTS IN PIPING 2" OR LESS SHALL HAVE A CLEARANCE OF NOT LESS THAN 18" X 18" IN FRONT OF THE CLEANOUT, CLEANOUTS IN PIPING LARGER THAN 2" INCHES SHALL HAVE A CLEARANCE OF NOT LESS THAN 24" X 24".		
CLEANOUTS: CPC TABLE 707.1		
PIPE SIZE	CLEANOUT SIZE	THREADS (PER INCH)
1-1/2" - 2"	1-1/2"	11-1/2
2-1/2" - 3"	2-1/2"	8
4" & LARGER	3-1/2"	8

2 WALL CLEANOUT
NTS

rrm design group
rrmdesign.com | (805) 543-1794
3765 S. Higuera, San Luis Obispo, CA 93401

THE INCLUDED DRAWINGS, SPECIFICATIONS, IDEAS, DESIGNS AND ARRANGEMENTS REPRESENTED THEREBY ARE AND SHALL REMAIN THE PROPERTY OF RRM DESIGN GROUP AND NO PART THEREOF SHALL BE COPIED, DISCLOSED TO OTHERS OR USED IN CONNECTION WITH ANY WORK OR PROJECT OTHER THAN THE SPECIFIC PROJECT FOR WHICH THEY HAVE BEEN PREPARED AND DEVELOPED WITHOUT THE WRITTEN CONSENT OF RRM DESIGN GROUP. VISUAL CONTACT WITH THESE DRAWINGS OR SPECIFICATIONS SHALL CONSTITUTE CONCLUSIVE EVIDENCE OF ACCEPTANCE OF THESE RESTRICTIONS. ANY REPRODUCTION OR DISTRIBUTION BY ANY ENTITY OTHER THAN THE OWNER FOR WHOM THIS WORK WAS PREPARED FOR IS STRICTLY PROHIBITED AND SHALL NOTBE CONSIDERED A WAIVER OF RRM DESIGN GROUP'S RIGHTS.
RRM DESIGN GROUP COPYRIGHT 2021
RRM IS A CALIFORNIA CORPORATION

REGISTERED PROFESSIONAL ENGINEER
BRIAN P. STARRETT
M 34068
EXP. 6/30/24
MECHANICAL
STATE OF CALIFORNIA

CONSULTANT

3C | ENGINEERING
SMARTER BUILDINGS BY DESIGN

805. 540. 3363 www.3CENG.COM
1 1003 Pacific St San Luis Obispo, CA 93401

BY 3C Engineering, Inc., ALL COMMON LAW COPYRIGHT AND OTHER PROPERTY RIGHTS RESERVE THIS DOCUMENT AS AN ORIGINAL AND UNPUBLISHED WORK PRODUCT. THIS WORK SHALL NOT BE DUPLICATED, COPIED, DISCLOSED OR USED IN CONNECTION WITH ANY WORK OR PROJECT OTHER THAN THE SPECIFIC PROJECT FOR WHICH IT AS BEEN PREPARED. NOR SHALL IT BE ASSIGNED TO ANY THIRD PARTY WITHOUT FIRST OBTAINING THE EXPRESS WRITTEN CONSENT OF VISUAL CONTACT. THIS DOCUMENT SHALL CONSTITUTE CONCLUSIVE EVIDENCE OF ACCEPTANCE OF THESE RESTRICTIONS.

AGENCY

FOURTH ST COMMUNITY CENTER AND PARK
HENDERSON AVE., PORTERVILLE, CA 93257

PLUMBING DETAILS

NO.	REVISION	DATE
1	PLAN CHECK REVISION 1	5/17/24

PROJECT MANAGER: DS
DRAWN BY: BS
CHECKED BY: BS
DATE: 2024.05.17
PROJECT NUMBER: 2883-01-RC22
SHEET: P-002

100% CONSTRUCTION DOCUMENTS

C:\Users\eferman\appdata\local\temp\AcPublish_30444\Porterville Community Center Plumbing Lead.dwg.eferman May 15,2024-1:52pm

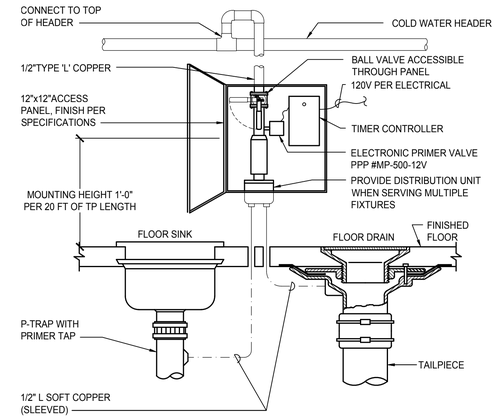

1 TRAP PRIMER
NTS

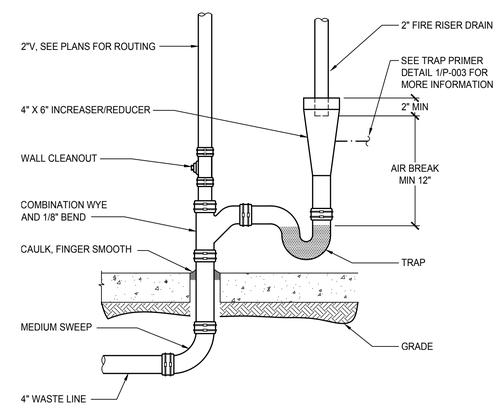

2 STANDPIPE FUNNEL DRAIN
NTS

rrm design group
rrmdesign.com | (805) 543-1794
3765 S. Higuera, San Luis Obispo, CA 93401

THE INCLUDED DRAWINGS, SPECIFICATIONS, IDEAS, DESIGNS AND ARRANGEMENTS REPRESENTED THEREBY ARE AND SHALL REMAIN THE PROPERTY OF RRM DESIGN GROUP AND NO PART THEREOF SHALL BE COPIED, DISCLOSED TO OTHERS OR USED IN CONNECTION WITH ANY WORK OR PROJECT OTHER THAN THE SPECIFIC PROJECT FOR WHICH THEY HAVE BEEN PREPARED AND DEVELOPED WITHOUT THE WRITTEN CONSENT OF RRM DESIGN GROUP. VISUAL CONTACT WITH THESE DRAWINGS OR SPECIFICATIONS SHALL CONSTITUTE CONCLUSIVE EVIDENCE OF ACCEPTANCE OF THESE RESTRICTIONS. THE REUSE OF THESE DRAWINGS FOR ANY AGENCY REVIEW SHALL NOTBE CONSIDERED A WAIVER OF RRM DESIGN GROUP'S RIGHTS.
RRM DESIGN GROUP COPYRIGHT 2021
RRM IS A CALIFORNIA CORPORATION

REGISTERED PROFESSIONAL ENGINEER
BRYAN P. STARRETT
M 34068
EXP. 6/30/24
MECHANICAL
STATE OF CALIFORNIA

CONSULTANT

3C | ENGINEERING
SMARTER BUILDINGS BY DESIGN
805. 540. 3363 www.3CENG.COM
© 2022 PLAN (F.S) SAN LUIS OBISPO, CA 93401

BY 3C Engineering, Inc., ALL COMMON LAW COPYRIGHT AND OTHER PROPERTY RIGHTS RESERVE THIS DOCUMENT AS AN ORIGINAL AND UNPUBLISHED WORK PRODUCT. THIS WORK SHALL NOT BE DUPLICATED, COPIED, DISCLOSED OR USED IN CONNECTION WITH ANY WORK OR PROJECT OTHER THAN THE SPECIFIC PROJECT FOR WHICH IT AS BEEN PREPARED. NOR SHALL IT BE ASSIGNED TO ANY THIRD PARTY WITHOUT FIRST OBTAINING THE EXPRESS WRITTEN CONSENT OF VISUAL CONTACT. THIS DOCUMENT SHALL CONSTITUTE CONCLUSIVE EVIDENCE OF ACCEPTANCE OF THESE RESTRICTIONS.

AGENCY

FOURTH ST COMMUNITY CENTER AND PARK
HENDERSON AVE., PORTERVILLE, CA 93257

PLUMBING DETAILS

NO.	REVISION	DATE
1	PLAN CHECK REVISION 1	5/17/24

100% CONSTRUCTION DOCUMENTS

PROJECT MANAGER
DS
DRAWN BY BS
CHECKED BY BS
DATE
2024.05.17
PROJECT NUMBER
2883-01-RC22
SHEET
P-003

C:\Users\eferman\appdata\local\temp\AcPublish_9044\Porterville Community Center Plumbing Lead.dwg eferman May 15,2024-1:52pm

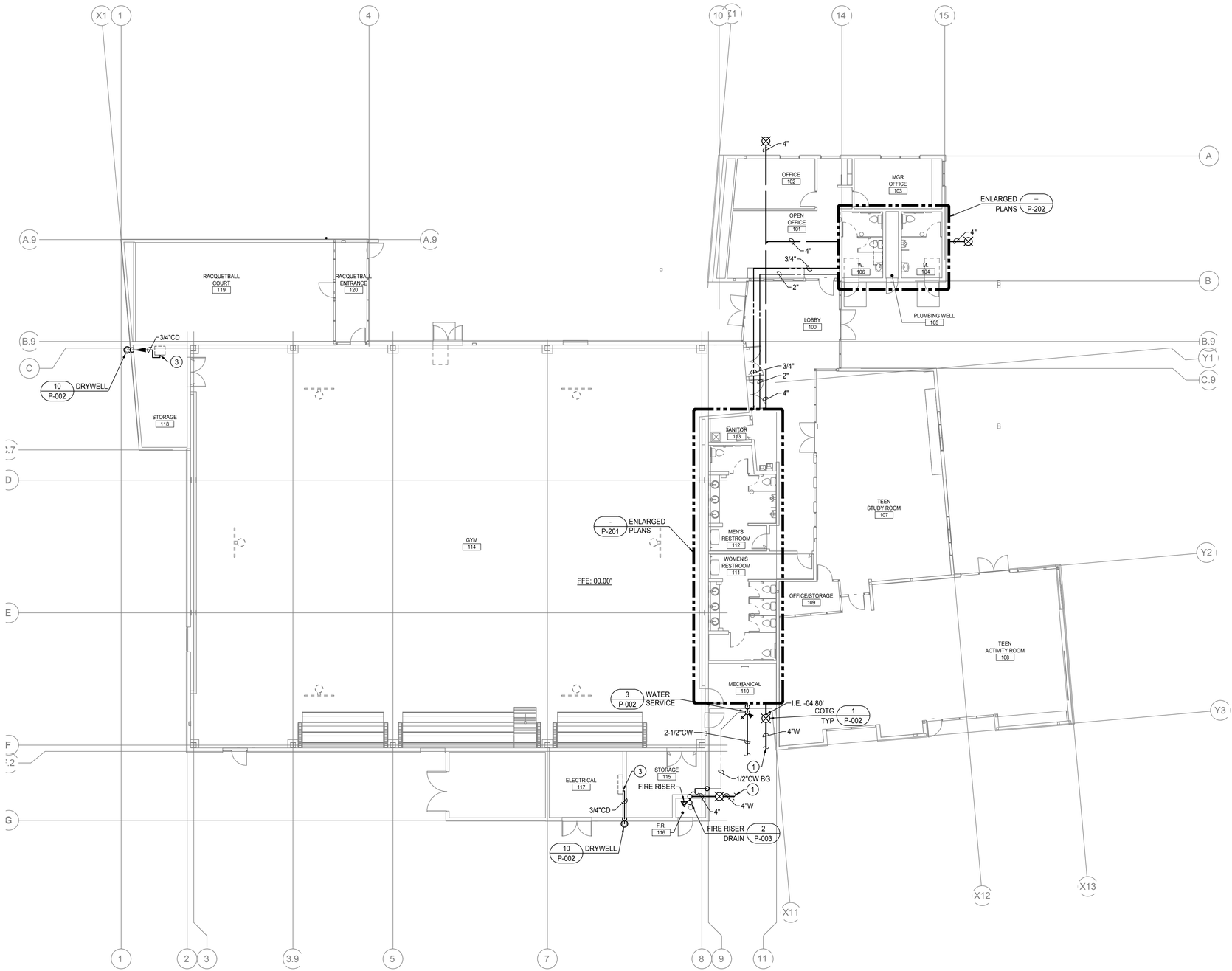

PLUMBING FLOOR PLAN

SCALE:3/32" = 1'-0"

KEY NOTES

APPLICABLE TO THIS SHEET ONLY

1	REFER TO CIVIL PLANS FOR CONTINUATION OF PIPING.
2	INVERT ELEVATION WHERE THE BUILDING DRAIN AND BUILDING SEWER MEET SHALL BE 4.80' MINIMUM BELOW THE FINISHED FLOOR ELEVATION.
3	3/4" CONDENSATE CONNECTION TO MECHANICAL EQUIPMENT. SEE DETAIL 8/P-002 FOR MORE INFORMATION.

PLUMBING GENERAL NOTES

APPLICABLE TO THIS SHEET ONLY

1	SEE PLUMBING FIXTURE SCHEDULE FOR BRANCH PIPE SIZING.
2	PROVIDE ANGLE STOPS FOR ALL PLUMBING FIXTURE BRANCH PIPING LINES.
3	SLOPE SANITARY WASTE PIPING MIN 2% IN DIRECTION OF FLOW.
4	SLOPE VENT PIPING UP TOWARDS VTR MIN 1%.
5	SLOPE CONDENSATE PIPING MIN 1% IN DIRECTION OF FLOW.
6	ALL ROOMS WITH FLOOR DRAINAGE MUST HAVE FLOORS SLOPED TOWARD DRAIN. SEE ARCHITECTURAL PLANS FOR REQUIRED SLOPE.
7	PROVIDE CLEANOUTS IN ALL LOCATIONS SHOWN. COORDINATE ALL WALL CLEANOUTS WITH PLUMBING FIXTURES, CASEWORK, AND ARCHITECTURAL ELEVATIONS. SEE DETAIL 2/P-002 FOR SIZING AND CLEARANCES REQUIRED.
8	PLUMBING VENTS SHALL TERMINATE NOT LESS THAN 6" ABOVE THE ROOF, NOR LESS THAN 12" FROM A VERTICAL SURFACE. MAINTAIN 10'-0" CLEARANCE FROM BUILDING AIR INTAKES.
9	HORIZONTAL RAIN WATER PIPING HAS BEEN SIZED PER 2022 CPC TABLE 1103.2 USING A RAINFALL RATE OF 2"(IN/H) & 1/4"/FT SLOPE
10	REFER TO MECHANICAL PLANS FOR LOCATIONS OF MECHANICAL EQUIPMENT AND DUCTWORK. COORDINATE ALL WORK TO FIT IN AVAILABLE SPACE.
11	COORDINATE PIPE ROUTING WITH LOCATION OF ELECTRICAL AND DATA PANELS. PIPING SHALL NOT BE ROUTED ABOVE THE PANELS.

rrm design group
rrmdesign.com | (805) 543-1794
3765 S. Higuera, San Luis Obispo, CA 93401

THE INCLUDED DRAWINGS, SPECIFICATIONS, IDEAS, DESIGNS AND ARRANGEMENTS REPRESENTED THEREBY ARE AND SHALL REMAIN THE PROPERTY OF RRM DESIGN GROUP AND NO PART THEREOF SHALL BE COPIED, DISCLOSED TO OTHERS OR USED IN CONNECTION WITH ANY WORK OR PROJECT OTHER THAN THE SPECIFIC PROJECT FOR WHICH THEY HAVE BEEN PREPARED AND DEVELOPED WITHOUT THE WRITTEN CONSENT OF RRM DESIGN GROUP. VISUAL CONTACT WITH THESE DRAWINGS OR SPECIFICATIONS SHALL CONSTITUTE CONCLUSIVE EVIDENCE OF ACCEPTANCE OF THESE RESTRICTIONS. SUBMITTAL OF THESE DRAWINGS FOR AGENCY REVIEW SHALL NOTBE CONSIDERED A WAIVER OF RRM DESIGN GROUP'S RIGHTS.

RRM DESIGN GROUP COPYRIGHT 2021
RRM IS A CALIFORNIA CORPORATION

REGISTERED PROFESSIONAL ENGINEER
BRIAN P. STARRETT
M 34068
EXP. 6/30/24
MECHANICAL
STATE OF CALIFORNIA

CONSULTANT

3C | ENGINEERING
SMARTER BUILDINGS BY DESIGN
✆ 805. 540. 3363 ⊕ WWW.3CENG.COM
© 2022 RIUM JT SAN LUIS OBISPO, CA 93401

BY 3C Engineering, Inc., ALL COMMON LAW COPYRIGHT AND OTHER PROPERTY RIGHTS RESERVE THIS DOCUMENT AS AN ORIGINAL AND UNPUBLISHED WORK PRODUCT. THIS WORK SHALL NOT BE DUPLICATED, COPIED, DISCLOSED OR USED IN CONNECTION WITH ANY WORK OR PROJECT OTHER THAN THE SPECIFIC PROJECT FOR WHICH IT AS BEEN PREPARED. NOR SHALL IT BE ASSIGNED TO ANY THIRD PARTY WITHOUT FIRST OBTAINING THE EXPRESS WRITTEN CONSENT OF VISUAL CONTACT. THIS DOCUMENT SHALL CONSTITUTE CONCLUSIVE EVIDENCE OF ACCEPTANCE OF THESE RESTRICTIONS.

AGENCY

FOURTH ST COMMUNITY CENTER AND PARK

HENDERSON AVE., PORTERVILLE, CA 93257

PLUMBING FLOOR PLAN

NO.	REVISION	DATE
1	PLAN CHECK REVISION 1	5/17/24

100% CONSTRUCTION DOCUMENTS

PROJECT MANAGER: DS
DRAWN BY: BS
CHECKED BY: BS
DATE: 2024.05.17
PROJECT NUMBER: 2883-01-RC22
SHEET: P-200

C:\Users\eferman\appdata\local\temp\AcPublish_9044\Porterville Community Center Plumbing Plan.dwg eferman May 15,2024-1:52pm

KEY NOTES

APPLICABLE TO THIS SHEET ONLY

1	REFER TO SHEET P-200 FOR CONTINUATION OF PIPING
2	1-1/4" CONDENSATE DOWN IN WALL. TERMINATE TO FIXTURE TAILPIECE SEE DETAIL 11/P-002 FOR MORE INFORMATION.

PLUMBING GENERAL NOTES

APPLICABLE TO THIS SHEET ONLY

1	SEE PLUMBING FIXTURE SCHEDULE FOR BRANCH PIPE SIZING.
2	PROVIDE ANGLE STOPS FOR ALL PLUMBING FIXTURE BRANCH PIPING LINES.
3	SLOPE SANITARY WASTE PIPING MIN 2% IN DIRECTION OF FLOW.
4	SLOPE VENT PIPING UP TOWARDS VTR MIN 1%.
5	SLOPE CONDENSATE PIPING MIN 1% IN DIRECTION OF FLOW.
6	ALL ROOMS WITH FLOOR DRAINAGE MUST HAVE FLOORS SLOPED TOWARD DRAIN. SEE ARCHITECTURAL PLANS FOR REQUIRED SLOPE.
7	PROVIDE CLEANOUTS IN ALL LOCATIONS SHOWN. COORDINATE ALL WALL CLEANOUTS WITH PLUMBING FIXTURES, CASEWORK, AND ARCHITECTURAL ELEVATIONS. SEE DETAIL 2/P-002 FOR SIZING AND CLEARANCES REQUIRED.
8	PLUMBING VENTS SHALL TERMINATE NOT LESS THAN 6" ABOVE THE ROOF, NOR LESS THAN 12" FROM A VERTICAL SURFACE. MAINTAIN 10'-0" CLEARANCE FROM BUILDING AIR INTAKES.
9	HORIZONTAL RAIN WATER PIPING HAS BEEN SIZED PER 2022 CPC TABLE 1103.2 USING A RAINFALL RATE OF 2"(IN/H) & 1/4"/FT SLOPE
10	REFER TO MECHANICAL PLANS FOR LOCATIONS OF MECHANICAL EQUIPMENT AND DUCTWORK. COORDINATE ALL WORK TO FIT IN AVAILABLE SPACE.
11	COORDINATE PIPE ROUTING WITH LOCATION OF ELECTRICAL AND DATA PANELS. PIPING SHALL NOT BE ROUTED ABOVE THE PANELS.

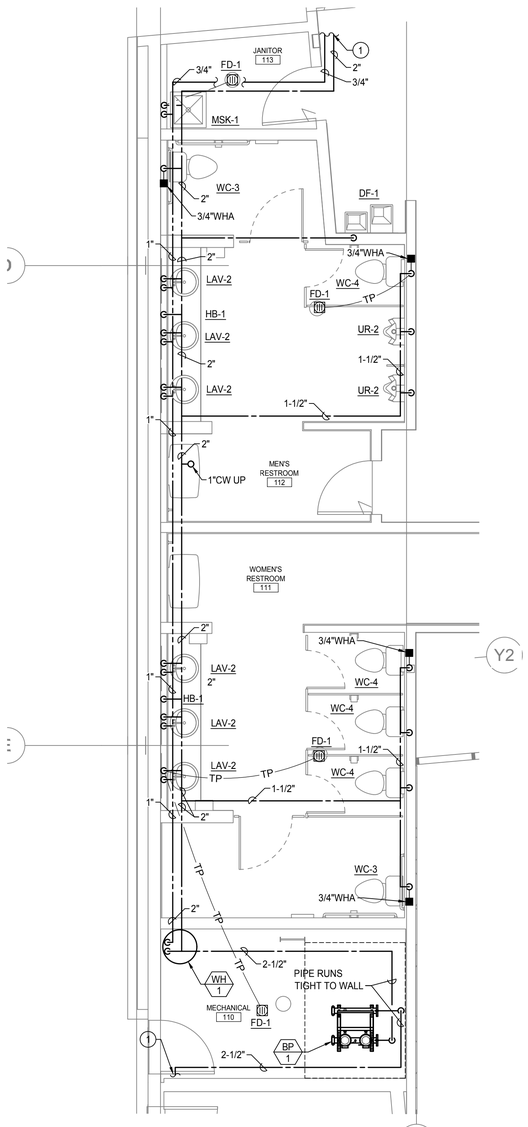

HOT & COLD WATER 11

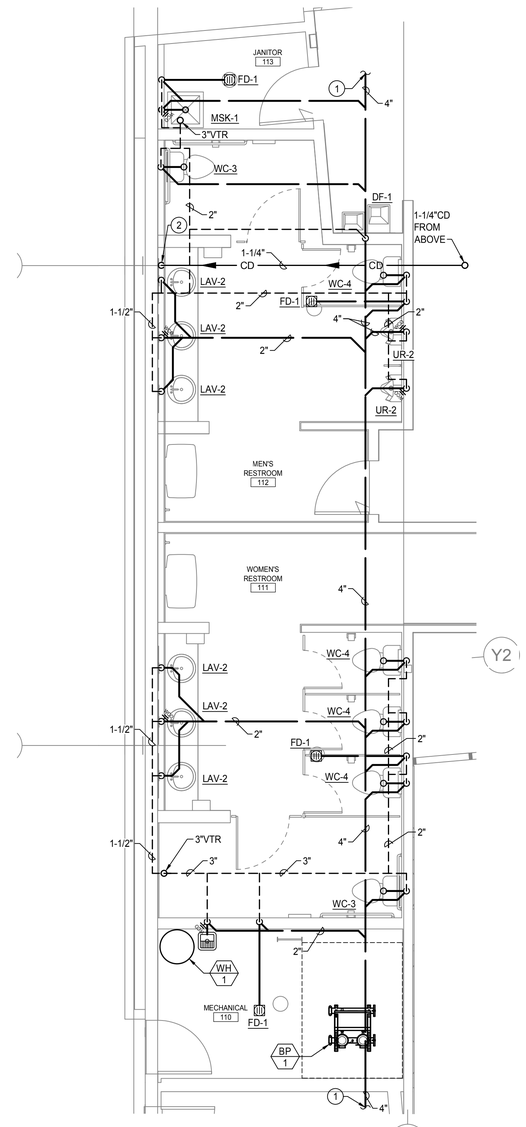

WASTE & VENT 11

PLUMBING RESTROOM - ENLARGED PLANS

SCALE:1/4" = 1'-0"

rrm design group

rrmdesign.com | (805) 543-1794

3765 S. Higuera, San Luis Obispo, CA 93401

THE INCLUDED DRAWINGS, SPECIFICATIONS, IDEAS, DESIGNS AND ARRANGEMENTS REPRESENTED THEREBY ARE AND SHALL REMAIN THE PROPERTY OF RRM DESIGN GROUP AND NO PART THEREOF SHALL BE COPIED, DISCLOSED TO OTHERS OR USED IN CONNECTION WITH ANY WORK OR PROJECT OTHER THAN THE SPECIFIC PROJECT FOR WHICH THEY HAVE BEEN PREPARED AND DEVELOPED WITHOUT THE WRITTEN CONSENT OF RRM DESIGN GROUP. VISUAL CONTACT WITH THESE DRAWINGS OR SPECIFICATIONS SHALL CONSTITUTE CONCLUSIVE EVIDENCE OF ACCEPTANCE OF THESE RESTRICTIONS. ANY REPRODUCTION OR ALTERATION WITHOUT PRIOR WRITTEN CONSENT SHALL NOTBE CONSIDERED A WAIVER OF RRM DESIGN GROUP'S RIGHTS.

RRM DESIGN GROUP COPYRIGHT 2021
RRM IS A CALIFORNIA CORPORATION

REGISTERED PROFESSIONAL ENGINEER
BRIAN P. STARRETT
M 34068
EXP. 6/30/24
MECHANICAL
STATE OF CALIFORNIA

CONSULTANT

3C | ENGINEERING
SMARTER BUILDINGS BY DESIGN
805. 540. 3363 www.3CENG.COM
© 2022 PLAN 3 SAN LUIS OBISPO, CA 93401

BY 3C Engineering, Inc., ALL COMMON LAW COPYRIGHT AND OTHER PROPERTY RIGHTS RESERVE THIS DOCUMENT AS AN ORIGINAL AND UNPUBLISHED WORK PRODUCT. THIS WORK SHALL NOT BE DUPLICATED, COPIED, DISCLOSED OR USED IN CONNECTION WITH ANY WORK OR PROJECT OTHER THAN THE SPECIFIC PROJECT FOR WHICH IT AS BEEN PREPARED. NOR SHALL IT BE ASSIGNED TO ANY THIRD PARTY WITHOUT FIRST OBTAINING THE EXPRESS WRITTEN CONSENT OF VISUAL CONTACT. THIS DOCUMENT SHALL CONSTITUTE CONCLUSIVE EVIDENCE OF ACCEPTANCE OF THESE RESTRICTIONS.

AGENCY

100% CONSTRUCTION DOCUMENTS

FOURTH ST COMMUNITY CENTER AND PARK

HENDERSON AVE., PORTERVILLE, CA 93257

PLUMBING FLOOR PLANS - ENLARGED

NO.	REVISION	DATE
1	PLAN CHECK REVISION 1	5/17/24

PROJECT MANAGER
DS

DRAWN BY BS
CHECKED BY BS

DATE
2024.05.17

PROJECT NUMBER
2883-01-RC22

SHEET
P-201

C:\Users\efernan\appdata\local\temp\AcPublish_9044\Porterville Community Center Plumbing Plan.dwg efernan May 15,2024-1:52pm

KEY NOTES

	APPLICABLE TO THIS SHEET ONLY
1	REFER TO SHEET P-200 FOR CONTINUATION OF PIPING
2	3/4" CONDENSATE CONNECTION TO MECHANICAL EQUIPMENT. SEE DETAIL 8/P-002 FOR MORE INFORMATION.
3	3/4" CONDENSATE DOWN IN WALL. TERMINATE TO FLOOR SINK WITH MINIMUM 1" AIR GAP.

PLUMBING GENERAL NOTES

	APPLICABLE TO THIS SHEET ONLY
1	SEE PLUMBING FIXTURE SCHEDULE FOR BRANCH PIPE SIZING.
2	PROVIDE ANGLE STOPS FOR ALL PLUMBING FIXTURE BRANCH PIPING LINES.
3	SLOPE SANITARY WASTE PIPING MIN 2% IN DIRECTION OF FLOW.
4	SLOPE VENT PIPING UP TOWARDS VTR MIN 1%.
5	SLOPE CONDENSATE PIPING MIN 1% IN DIRECTION OF FLOW.
6	ALL ROOMS WITH FLOOR DRAINAGE MUST HAVE FLOORS SLOPED TOWARD DRAIN. SEE ARCHITECTURAL PLANS FOR REQUIRED SLOPE.
7	PROVIDE CLEANOUTS IN ALL LOCATIONS SHOWN. COORDINATE ALL WALL CLEANOUTS WITH PLUMBING FIXTURES, CASEWORK, AND ARCHITECTURAL ELEVATIONS. SEE DETAIL 2/P-002 FOR SIZING AND CLEARANCES REQUIRED.
8	PLUMBING VENTS SHALL TERMINATE NOT LESS THAN 6" ABOVE THE ROOF, NOR LESS THAN 12" FROM A VERTICAL SURFACE. MAINTAIN 10'-0" CLEARANCE FROM BUILDING AIR INTAKES.
9	REFER TO MECHANICAL PLANS FOR LOCATIONS OF MECHANICAL EQUIPMENT AND DUCTWORK. COORDINATE ALL WORK TO FIT IN AVAILABLE SPACE.
10	COORDINATE PIPE ROUTING WITH LOCATION OF ELECTRICAL AND DATA PANELS. PIPING SHALL NOT BE ROUTED ABOVE THE PANELS.

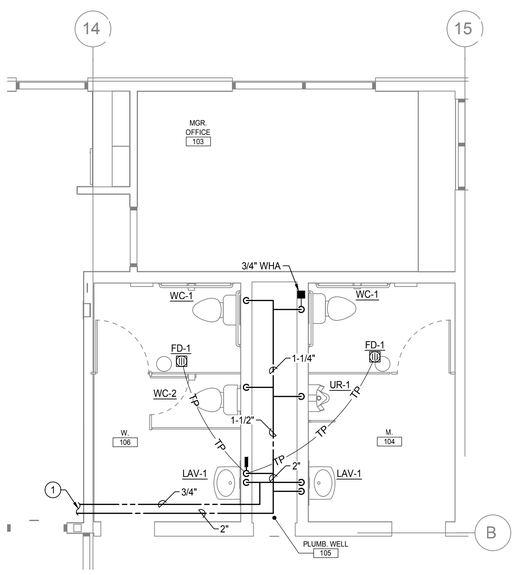

HOT & COLD WATER

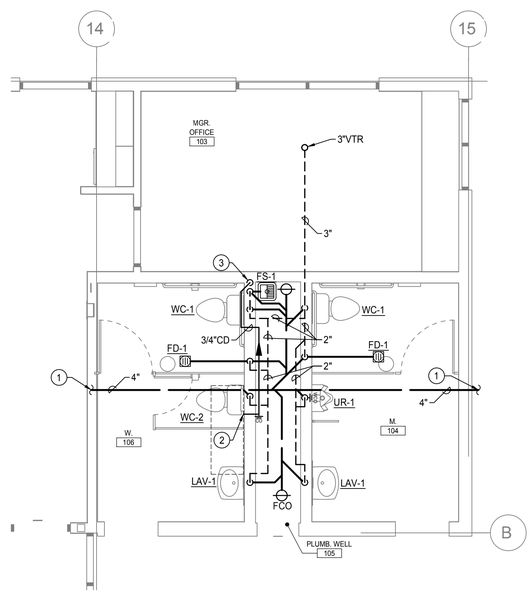

WASTE & VENT

PLUMBING RESTROOM - ENLARGED PLANS

SCALE:1/4" = 1'-0"

C:\Users\efermanappdata\local\temp\AcPublish_9044\Porterville Community Center Plumbing Plan.dwg efermanMay 15,2024-1:53pm

rrm design group
rrmdesign.com | (805) 543-1794
3765 S. Higuera, San Luis Obispo, CA 93401

THE INCLUDED DRAWINGS, SPECIFICATIONS, IDEAS, DESIGNS AND ARRANGEMENTS REPRESENTED THEREBY ARE AND SHALL REMAIN THE PROPERTY OF RRM DESIGN GROUP AND NO PART THEREOF SHALL BE COPIED, DISCLOSED TO OTHERS OR USED IN CONNECTION WITH ANY WORK OR PROJECT OTHER THAN THE SPECIFIC PROJECT FOR WHICH THEY HAVE BEEN PREPARED AND DEVELOPED WITHOUT THE WRITTEN CONSENT OF RRM DESIGN GROUP. VISUAL CONTACT WITH THESE DRAWINGS OR SPECIFICATIONS SHALL CONSTITUTE CONCLUSIVE EVIDENCE OF ACCEPTANCE OF THESE RESTRICTIONS. THE ABOVE RESTRICTIONS ON ANY PRELIMINARY REVIEW SHALL NOTBE CONSIDERED A WAIVER OF RRM DESIGN GROUP'S RIGHTS.

RRM DESIGN GROUP COPYRIGHT 2021
RRM IS A CALIFORNIA CORPORATION

LICENSED PROFESSIONAL ENGINEER
BRYAN P. STARRETT
M 34068
EXP. 6/30/24
MECHANICAL
STATE OF CALIFORNIA

CONSULTANT

3C | ENGINEERING
SMARTER BUILDINGS BY DESIGN
805. 540. 3363 WWW.3CENG.COM

© 2020 PALM ST SAN LUIS OBISPO, CA 93401

BY 3C Engineering, Inc., ALL COMMON LAW COPYRIGHT AND OTHER PROPERTY RIGHTS RESERVE THIS DOCUMENT AS AN ORIGINAL AND UNPUBLISHED WORK PRODUCT. THIS WORK SHALL NOT BE DUPLICATED, COPIED, DISCLOSED OR USED IN CONNECTION WITH ANY WORK OR PROJECT OTHER THAN THE SPECIFIC PROJECT FOR WHICH IT AS BEEN PREPARED. NOR SHALL IT BE ASSIGNED TO ANY THIRD PARTY WITHOUT FIRST OBTAINING THE EXPRESS WRITTEN CONSENT OF VISUAL CONTACT. THIS DOCUMENT SHALL CONSTITUTE CONCLUSIVE EVIDENCE OF ACCEPTANCE OF THESE RESTRICTIONS.

AGENCY

100% CONSTRUCTION DOCUMENTS

FOURTH ST COMMUNITY CENTER AND PARK

HENDERSON AVE., PORTERVILLE, CA 93257

PLUMBING FLOOR PLANS - ENLARGED

NO.	REVISION	DATE
1	PLAN CHECK REVISION 1	5/17/24

PROJECT MANAGER
DS

DRAWN BY BS | **CHECKED BY** BS

DATE
2024.05.17

PROJECT NUMBER
2883-01-RC22

SHEET
P-202

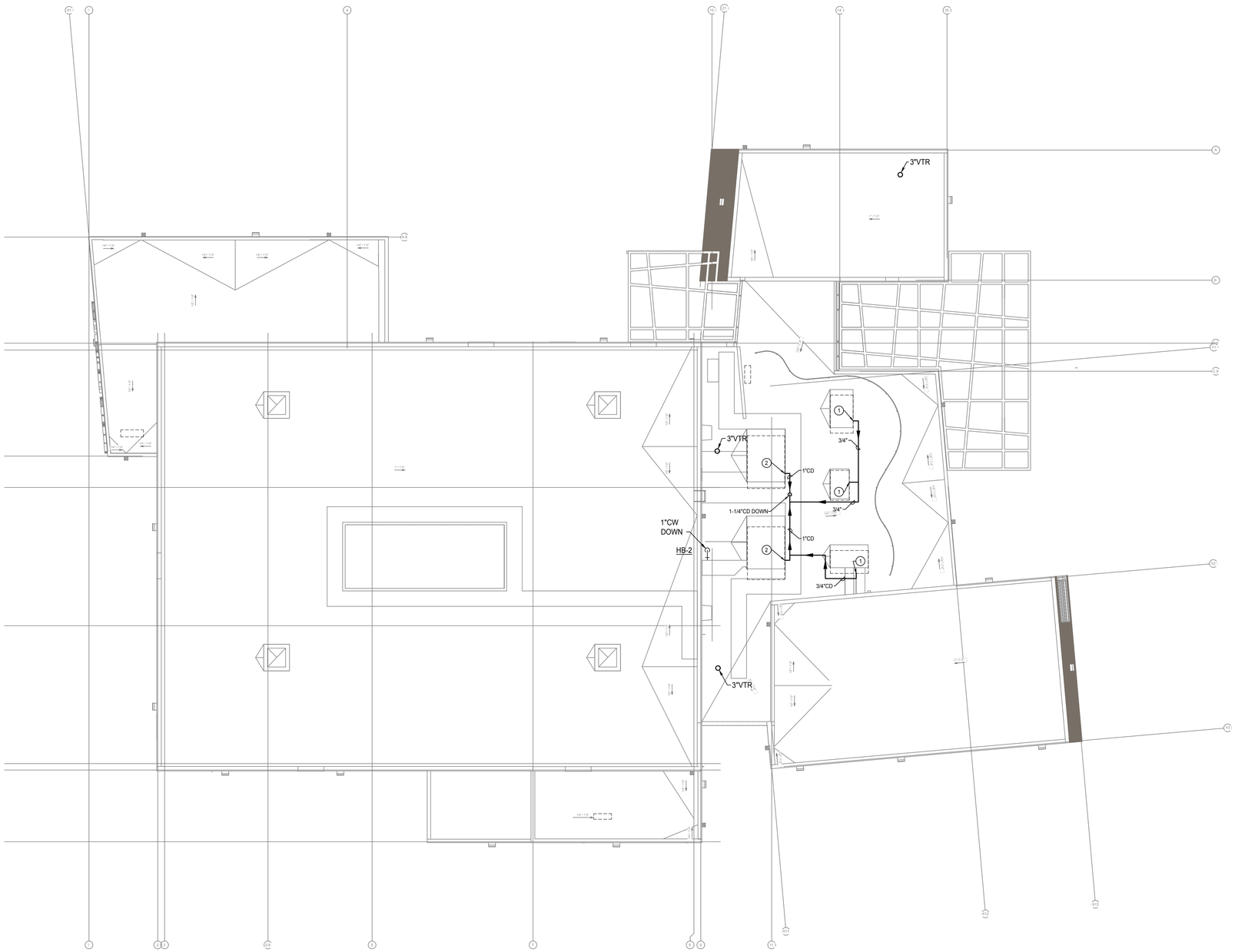

PLUMBING ROOF PLAN

SCALE:3/32" = 1'-0"

KEY NOTES

APPLICABLE TO THIS SHEET ONLY

1	3/4" CONDENSATE CONNECTION TO MECHANICAL EQUIPMENT. SEE DETAIL 9/P-002 FOR MORE INFORMATION.
2	1" CONDENSATE CONNECTION TO MECHANICAL EQUIPMENT. SEE DETAIL 9/P-002 FOR MORE INFORMATION.

PLUMBING GENERAL NOTES

APPLICABLE TO THIS SHEET ONLY

1	SEE PLUMBING FIXTURE SCHEDULE FOR BRANCH PIPE SIZING.
2	PROVIDE ANGLE STOPS FOR ALL PLUMBING FIXTURE BRANCH PIPING LINES.
3	SLOPE VENT PIPING UP TOWARDS VTR MIN 1%.
4	SLOPE CONDENSATE PIPING MIN 1% IN DIRECTION OF FLOW.
5	PLUMBING VENTS SHALL TERMINATE NOT LESS THAN 6" ABOVE THE ROOF, NOR LESS THAN 12" FROM A VERTICAL SURFACE. MAINTAIN 10'-0" CLEARANCE FROM BUILDING AIR INTAKES.
6	REFER TO MECHANICAL PLANS FOR LOCATIONS OF MECHANICAL EQUIPMENT AND DUCTWORK. COORDINATE ALL WORK TO FIT IN AVAILABLE SPACE.
7	COORDINATE PIPE ROUTING WITH LOCATION OF ELECTRICAL AND DATA PANELS. PIPING SHALL NOT BE ROUTED ABOVE THE PANELS.

rrm design group

rrmdesign.com | (805) 543-1794

3765 S. Higuera, San Luis Obispo, CA 93401

THE INCLUDED DRAWINGS, SPECIFICATIONS, IDEAS, DESIGNS AND ARRANGEMENTS REPRESENTED THEREBY ARE AND SHALL REMAIN THE PROPERTY OF RRM DESIGN GROUP AND NO PART THEREOF SHALL BE COPIED, DISCLOSED TO OTHERS OR USED IN CONNECTION WITH ANY WORK OR PROJECT OTHER THAN THE SPECIFIC PROJECT FOR WHICH THEY HAVE BEEN PREPARED AND DEVELOPED WITHOUT THE WRITTEN CONSENT OF RRM DESIGN GROUP. VISUAL CONTACT WITH THESE DRAWINGS OR SPECIFICATIONS SHALL CONSTITUTE CONCLUSIVE EVIDENCE OF ACCEPTANCE OF THESE RESTRICTIONS. SUBMITTAL OF THESE DOCUMENTS FOR PUBLIC AGENCY REVIEW SHALL NOT BE CONSIDERED A WAIVER OF RRM DESIGN GROUP'S RIGHTS.

RRM DESIGN GROUP COPYRIGHT 2021
RRM IS A CALIFORNIA CORPORATION

REGISTERED PROFESSIONAL ENGINEER
BRIAN P. STARRETT
M 34068
EXP. 6/30/24
MECHANICAL
STATE OF CALIFORNIA

CONSULTANT

3C | ENGINEERING
SMARTER BUILDINGS BY DESIGN
t. 805. 540. 3363 ● WWW.3CENG.COM
1020 PALM ST. SAN LUIS OBISPO, CA 93401

BY 3C Engineering, Inc., ALL COMMON LAW COPYRIGHT AND OTHER PROPERTY RIGHTS RESERVE THIS DOCUMENT AS AN ORIGINAL AND UNPUBLISHED WORK PRODUCT. THIS WORK SHALL NOT BE DUPLICATED, COPIED, DISCLOSED OR USED IN CONNECTION WITH ANY WORK OR PROJECT OTHER THAN THE SPECIFIC PROJECT FOR WHICH IT AS BEEN PREPARED, NOR SHALL IT BE ASSIGNED TO ANY THIRD PARTY WITHOUT FIRST OBTAINING THE EXPRESS WRITTEN CONSENT OF VISUAL CONTACT. THIS DOCUMENT SHALL CONSTITUTE CONCLUSIVE EVIDENCE OF ACCEPTANCE OF THESE RESTRICTIONS.

AGENCY

FOURTH ST COMMUNITY CENTER AND PARK

HENDERSON AVE., PORTERVILLE, CA 93257

PLUMBING ROOF PLAN

NO.	REVISION	DATE
1	PLAN CHECK REVISION 1	5/17/24

PROJECT MANAGER
DS

DRAWN BY
BS

CHECKED BY
BS

DATE
2024.05.17

PROJECT NUMBER
2883-01-RC22

SHEET
P-300

100% CONSTRUCTION DOCUMENTS

C:\Users\eferman\appdata\local\temp\AcPublish_9044\Porterville Community Center Plumbing Plan.dwg eferman May 15,2024-1:53pm

FIXTURE SCHEDULE

FIXTURE SYMBOL (3-A-131): 3 = CIRCUIT NUMBER, A = FIXTURE TYPE, 131 = FIXTURE WATTAGE

TYPE	WATTS	LAMPS	VOLT	MANUFACTURER	CATALOG NO.	MOUNT	NOTES
A	131	L.E.D.	120-277V	LITHONIA	JHBL-18000LM-GL-WD-277V-GZ10-40K-80CRI-WGX-DWH	PENDANT	PER #1/E506
AE	131	L.E.D.	↓	LITHONIA	JHBL-18000LM-GL-WD-277V-GZ10-40K-80CRI-WGX-DWH-E15WCPFMC	PENDANT	PER #1/E506 (1)
B	32	L.E.D.		LITHONIA	2BLT2-40L-ADP-MVOLT-WZ1-LP840-N100	FLUSH T-BAR	PER #10/E502
BE	32	L.E.D.		LITHONIA	2BLT2-40L-ADP-MVOLT-WZ1-LP840-N100-E10WLP	FLUSH T-BAR	PER #10/E502 (1)
C	27	L.E.D.		LITHONIA	STL4-30L-EZB-LP840-N100	SURFACE	PER #1/E502
CE	27	L.E.D.		LITHONIA	STL4-30L-EZB-LP840-N100-E10WLCP	SURFACE	PER #1/E502 (1)
D	39	L.E.D.		LUMINAIRE	VPF8-4-MIN10-40W-40K-MVOLT-CLP-WHT	SURFACE	PER #1/E502
DE	39	L.E.D.		LUMINAIRE	VPF8-4-MIN10-40W-40K-MVOLT-CLP-WHT-EMB310T20	SURFACE	PER #1/E502 (1)
E	25	L.E.D.		GOTHAM (revision 1)	EV06SQ-40-25-AR-LSS-MVOLT	RECESSED	PER #11/E502 (3)
EE	25	L.E.D.		GOTHAM	EV06SQ-40-25-AR-LSS-MVOLT-E10WCP	RECESSED	PER #11/E502 (1), (3)
F4	32	L.E.D.		MARK ARCHITECTURAL LIGHTING	S2PD-LLP-4FT-MSL4-80CRI-40K-1000LMF-SCT-MIN10-FLL-MVOLT-WHTT	SUSPEND	PER #4/E506 (4)
F4E	32	L.E.D.		MARK ARCHITECTURAL LIGHTING	S2PD-LLP-4FT-MSL4-80CRI-40K-1000LMF-SCT-MIN10-FLL-MVOLT-WHTT-E10WLCP	SUSPEND	PER #4/E506 (1), (4)
F8	64	L.E.D.		MARK ARCHITECTURAL LIGHTING	S2PD-LLP-8FT-MSL4-80CRI-40K-1000LMF-SCT-MIN10-FLL-MVOLT-WHTT	SUSPEND	PER #4/E506 (4)
F8E	64	L.E.D.		MARK ARCHITECTURAL LIGHTING	S2PD-LLP-8FT-MSL4-80CRI-40K-1000LMF-SCT-MIN10-FLL-MVOLT-WHTT-2E10WLCP	SUSPEND	PER #4/E506 (1), (4)
F12	96	L.E.D.		MARK ARCHITECTURAL LIGHTING	S2PD-LLP-12FT-MSL4-80CRI-40K-1000LMF-SCT-MIN10-FLL-MVOLT-WHTT	SUSPEND	PER #4/E506 (4)
F12E	96	L.E.D.		MARK ARCHITECTURAL LIGHTING	S2PD-LLP-12FT-MSL4-80CRI-40K-1000LMF-SCT-MIN10-FLL-MVOLT-WHTT-3E10WLCP	SUSPEND	PER #4/E506 (1), (4)
F16	128	L.E.D.		MARK ARCHITECTURAL LIGHTING	S2PD-LLP-16FT-MSL4-80CRI-40K-1000LMF-SCT-MIN10-FLL-MVOLT-WHTT	SUSPEND	PER #4/E506 (4)
G	115	L.E.D.		KUZCO LIGHTING	BRUNI CH24755	PENDANT	PER #7/E506 (4)
H	26	L.E.D.		GOTHAM	EV04CC-40-25-AR-WD-LSS-MVOLT	PENDANT	(4)
HE	26	L.E.D.		GOTHAM	EV04CC-40-25-AR-WD-LSS-MVOLT-E10WCP	PENDANT	(4)
J	118	L.E.D.		ALLIED PRODUCTS	RSD-RCFL14-17000-40K-OTG-U-D10	RECESSED	PER #2/E506
JE	118	L.E.D.		ALLIED PRODUCTS	RSD-RCFL14-17000-40K-OTG-U-D10-EM/2900	RECESSED	PER #2/E506
K	16	L.E.D.	↓	MARK ARCHITECTURAL	MCV504-LSL-8FT-MSL4-80CRI-40K-1200LMF-ASYM-MVOLT-SGW-NLIGHT-NOFCL	COVE	(revision 1)
B1	13	L.E.D.	120-277V	LITHONIA	RADB LED-P3-40K-ASY-MVOLT-BTTDBLBXD-BCCDBLBXD-H36-DBLBXD	BOLLARD	PER #11/E503
L2	25	L.E.D.		LITHONIA	WST-LED-P2-40K-VF-MVOLT-DBLXD	WALL	EXTERIOR (4)
L2E	25	L.E.D.		LITHONIA	WST-LED-P2-40K-VF-MVOLT-DBLXD-E20WH	WALL	EXTERIOR (3), (4)
L3	20	L.E.D.		LUMINAIRE	VPF4-4FT-NODIM-20-40K-MVOLT-CLP-BLK-WL	SURFACE	EXTERIOR, MOUNT ON BTTM OF TRELLIS
L3E	20	L.E.D.		LUMINAIRE	VPF4-4FT-NODIM-20-40K-MVOLT-CLP-BLK-WL-EMB310T20	SURFACE	EXTERIOR, MOUNT ON BTTM OF TRELLIS (1)
L4	27	L.E.D.		TARGETTI	JE-R-10-DV-24-40-L-JEDIJUMP-10-1US2749-1E3182	RECESSED IN WALL	
L5 (revision 1)	51	L.E.D.	↓	TARGETTI	JE-R-10-DV-48-40-L-JEDIJUMP-10-1US2751-1E3182	RECESSED IN WALL	
S1	50	L.E.D.	120-277V	VALMONT	RESIDENTIAL 320 BRAZO (OR APPROVED EQUAL)	POLE	PER #6/E502
S2	138	L.E.D.	↓	LITHONIA	DSX1-LED-P5-40K-BLC3 RPA-MVOLT-PIRH-DBLXD	POLE	PER #2/E502 (2)
X	2	L.E.D.	120-277V	LITHONIA	LE-S-W-1-R-120/277-ELNSD	SURFACE	SINGLE FACE EXIT SIGN WITH EMERGENCY BATTERY PACK

FIXTURE SCHEDULE NOTES:

(1) LIGHT FIXTURE SHALL BE EQUIPPED WITH AN EMERGENCY BATTERY PACK TO OPERATE THE L.E.D. DRIVER IN THE EMERGENCY MODE FOR A MINIMUM OF 90 MINUTES. PULL UNSWITCHED CIRCUIT TO EMERGENCY BATTERY PACK. REFER TO LIGHTING PLANS FOR EXACT LOCATIONS AND DETAIL PER #3/E502 FOR WIRING REQUIREMENTS.

(2) SET FIXTURE TO DIM TO 50% AFTER FIRST 15 MINUTES, THEN TO OFF AT 30 MINUTES.

(3) PROVIDE BAR HANGERS AS REQUIRED.

(4) SEE LIGHTING PLANS FOR MOUNTING HEIGHTS.

ELECTRICAL SYMBOLS NOTES:

(A) REFER TO FIRE ALARM DEVICES ELEVATION, DETAIL #1/E403 FOR RESPECTIVE MOUNTING HEIGHTS.

(B) AT EXTERIOR LOCATIONS, PROVIDE WEATHER-RESISTANT/TAMPER-RESISTANT G.F.C.I. DUPLEX RECEPTACLES, LEVITON #G5362-WTW OR EQUAL. AT DAMP LOCATIONS, PROVIDE A DIECAST WEATHERPROOF LOCKABLE COVER, RACO #5028-0 OR EQUAL. AT WET LOCATIONS, PROVIDE A DIECAST WEATHERPROOF "WHILE-IN-USE" LOCKABLE COVER, EXTRA-DUTY RATED, RED DOT #CKSUV OR EQUAL.

(C) DUPLEX RECEPTACLE SHALL HAVE PRINTED WORDING "CONTROLLED" AND THE SPECIFIC SYMBOL ⏻ ON THE FACE OF THE RECEPTACLE. LEVITON #5362-2PE OR EQUAL.

(D) ACUITY CONTROLS #nGWY2-GFX AND 150ma POWER SUPPLY #PS150 OR EQUAL.

(E) ACUITY CONTROLS #nBRG-8-KIT OR EQUAL. REFER TO DETAIL #4/E502 FOR ADDITIONAL INFORMATION. PROVIDE A 4" SQ. x 2 1/8" DEEP OUTLET BOX FOR MOUNTING OF NETWORK INTERFACE BRIDGE AND POWER SUPPLY.

(F) ACUITY CONTROLS #nECY-MVOLT-BAC-ADR-ENC-GFXK OR EQUAL. REFER TO DETAIL #7/E502 FOR ADDITIONAL INFORMATION.

(G) ACUITY CONTROLS #nCM-6 OR EQUAL.

(H) ACUITY CONTROLS #CAT 5e * J1 OR EQUAL. * ASTERISK INDICATES LENGTH OF CABLE. CABLES ARE AVAILABLE IN 6", 1', 2', 5', 10', 15', 30', AND 50' LENGTHS.

(HH) LIBERTY WIRE CABLE, INC #18-2C-LVB OR EQUAL.

(J) "nLIGHT" ENABLED LIGHT FIXTURE PER FIXTURE SCHEDULE ON SHEET #EG101.

(K) ACUITY CONTROLS #WSD-PDT-WH OR EQUAL. PROVIDE A DECORATOR STYLE STAINLESS STEEL WALLPLATE.

(L) ACUITY CONTROLS #nPOD-A-KEY-WH. PROVIDE A DECORATOR STYLE STAINLESS STEEL WALLPLATE.

(M) ACUITY CONTROLS #nPODMA-DX-WH OR EQUAL. PROVIDE A DECORATOR STYLE STAINLESS STEEL WALLPLATE.

(N) ACUITY CONTROLS #nPODMA-2P-DX-WH OR EQUAL. PROVIDE A DECORATOR STYLE STAINLESS STEEL WALLPLATE.

(P) ACUITY CONTROLS #nPODMA-4P-DX-WH OR EQUAL. PROVIDE A DECORATOR STYLE STAINLESS STEEL WALLPLATE.

(Q) ACUITY CONTROLS #nPP20-PL OR EQUAL. CONNECT TO THE SAME 120V "UNSWITCHED" RECEPTACLE CIRCUIT, AS THE POWER/RELAY PACK CONTROLS.

(R) ACUITY CONTROLS #nPP16-D-EFP OR EQUAL.

(S) ACUITY CONTROLS #nPODMA-WH OR EQUAL. PROVIDE A DECORATOR STYLE STAINLESS STEEL WALLPLATE.

(T) ACUITY CONTROLS #nCM-PDT-10-RJB OR EQUAL.

(U) ACUITY CONTROLS #nWSXA-PDT-LV-WH OR EQUAL. PROVIDE A DECORATOR STYLE STAINLESS STEEL WALLPLATE.

(V) ACUITY CONTROLS #nCM-PDT-10-ADCX-RJB OR EQUAL.

(W) ACUITY CONTROLS #nPP16 OR EQUAL.

ELECTRICAL SYMBOLS

ALL DIMENSIONS TO CENTER OF BOX, U.O.N.

NOTE	SYMBOL	DESCRIPTION
	3-	CIRCUIT NUMBER (3-A-131)
	-A-	FIXTURE TYPE (3-A-131)
	-131	FIXTURE WATTAGE (3-A-131)
		HOME RUN 3/4"C - MIN. (PANEL A, CIRCUIT #3)
		CONDUIT RUN IN WALL OR ATTIC (1/2"C - 2 #12 AWG THWN + 1 #12 GND)
		CONDUIT RUN IN FLOOR OR UG (1/2"C - 2 #12 AWG THWN + 1 #12 GND)
		ANY CONDUIT RUN - 1/2"C - 3 #12 AWG THWN + 1 #12 GND
		" " - 3/4"C - 4 #12 AWG THWN + 1 #12 GND
		" " - 3/4"C - 5 #12 AWG THWN + 1 #12 GND
		" " - 1"C - 6 #12 AWG THWN + 1 #12 GND
		CONDUIT STUB - CAPPED AND LABELED.
	(1)	ELECTRICAL KEYNOTE #1, REFER TO NOTES ON SAME SHEET.
	U.O.N.	UNLESS OTHERWISE NOTED
	W.P.	WEATHERPROOF
	PDZ	DENOTES BOUNDARY OF PRIMARY DAYLIT ZONE.
	SDZ	DENOTES BOUNDARY OF SECONDARY DAYLIT ZONE.
	SKDZ	DENOTES BOUNDARY OF SKY LIGHT DAYLIT ZONE.
		TERMINAL CABINET (SIZE AS SHOWN)
		ELECTRICAL PANELBOARD
		DUPLEX RECEPTACLE IN WALL (+15" MIN. TO BOTTOM OF BOX)
		QUADRUPLEX RECEPTACLE IN WALL (+15" MIN. TO BOTTOM OF BOX)
(B)		G.F.C.I. DUPLEX RECEPTACLE IN WALL (+15" MIN. TO BOTTOM OF BOX)
(C)		"CONTROLLED" DUPLEX RECEPTACLE IN WALL (+15" MIN. TO BOTTOM OF BOX)
		EMERGENCY LIGHT FIXTURE
		EXIT LIGHT, WALL MOUNTED
		EXIT LIGHT, CEILING MOUNTED
		WALL MOUNTED LIGHT FIXTURE (MOUNT AS SHOWN)
		CEILING MOUNTED LIGHT FIXTURE
		RECESSED MOUNTED LIGHT FIXTURE IN CEILING
		LIGHT FIXTURE
(H)	--C5--	NETWORK CABLE - CATEGORY 5e CABLE, LENGTH AS REQUIRED
(HH)	--DC--	0-10V DIMMING CONTROL CABLE, LENGTH AS REQUIRED
(J)		LIGHT FIXTURE WITH "nLIGHT" EMBEDDED CONTROLS
	EM	RECESSED MOUNTED LIGHT FIXTURE EQUIPPED WITH EMERGENCY BATTERY PACK
	EM	LIGHT FIXTURE EQUIPPED WITH EMERGENCY BATTERY PACK
		POLE MOUNTED "AREA" LIGHT FIXTURE
		POLE MOUNTED "AREA" LIGHT FIXTURES
(K)	S	OCCUPANCY SENSOR WALL SWITCH, LINE VOLTAGE (+4'-0" MAX. TO TOP OF BOX, U.O.N.)
(M)	D	ON/OFF SWITCH WITH RAISE/LOWER DIMMING CONTROL (+4'-0" MAX. TO TOP OF BOX, U.O.N.)
(N)	D2	ON/OFF SWITCH WITH RAISE/LOWER DIMMING CONTROL (TWO CHANNELS) (+4'-0" MAX. TO TOP OF BOX, U.O.N.)
(P)	D4	ON/OFF SWITCH WITH RAISE/LOWER DIMMING CONTROL (FOUR CHANNELS) (+4'-0" MAX. TO TOP OF BOX, U.O.N.)
(Q)	PPR	LOW VOLTAGE POWER/RELAY PACK FOR RECEPTACLE CONTROLS MOUNTED IN ACCESSIBLE ATTIC SPACE, U.O.N.
(R)	PPD	LOW VOLTAGE POWER/RELAY PACK WITH 0-10VDC DIMMING OUTPUT FOR LIGHTING CONTROLS MOUNTED IN ACCESSIBLE ATTIC SPACE, U.O.N.
(W)	PP	LOW VOLTAGE POWER/RELAY PACK FOR LIGHTING CONTROLS MOUNTED IN ACCESSIBLE ATTIC SPACE, U.O.N.
(T)	OS	360° OCCUPANCY SENSOR (DUAL TECHNOLOGY), CEILING MOUNTED
(V)	OSP	360° OCCUPANCY SENSOR (DUAL TECHNOLOGY) WITH AUTOMATIC DIMMING CONTROL PHOTOCELL, CEILING MOUNTED
(G)	HB	HIGH BAY 360° OCCUPANCY SENSOR (PASSIVE INFRARED)
(U)	OS	OCCUPANCY SENSOR WALL SWITCH, LOW VOLTAGE (+4'-0" MAX. TO TOP OF BOX, U.O.N.)
(S)	S	ON/OFF SWITCH (+4'-0" MAX. TO TOP OF BOX, U.O.N.)
(L)	SK	ON/OFF DIGITAL KEYSWITCH WITH RAISE/LOWER DIMMING CONTROL (+4'-0" MAX. TO TOP OF BOX, U.O.N.)
(F)	NLC	NETWORK LIGHTING CONTROLLER
(E)	BRG	NETWORK INTERFACE BRIDGE WITH POWER SUPPLY
(D)	GFX	GRAPHIC WALLPOD WITH POWER SUPPLY
	J	JUNCTION BOX EQUIPPED WITH BLANK COVER
	J	JUNCTION BOX EQUIPPED WITH BLANK COVER AND FLEX CONNECTION
		MOTOR
		HEAVY-DUTY FUSED SAFETY SWITCH
	SD	ADDRESSABLE SMOKE DETECTOR MOUNTED ON CEILING
	MM	ADDRESSABLE MONITOR MODULE
	DMM	ADDRESSABLE DUAL MONITOR MODULE
	RM	ADDRESSABLE RELAY MODULE
	SCM	ADDRESSABLE SUPERVISED CONTROL MODULE
(A)	F	ADDRESSABLE MANUAL PULL STATION
(A)	V 15	FIRE ALARM VISUAL STROBE, 15 CANDELA (WALL MOUNTED)
(A)	AV 15	FIRE ALARM HORN/15 CANDELA VISUAL STROBE (WALL MOUNTED)
(A)	AV 30	FIRE ALARM HORN/30 CANDELA VISUAL STROBE (WALL MOUNTED)
(A)	AV 75	FIRE ALARM HORN/75 CANDELA VISUAL STROBE (WALL MOUNTED)
(A)	AV 110	FIRE ALARM HORN/110 CANDELA VISUAL STROBE (WALL MOUNTED)
(A)	AV 15	FIRE ALARM HORN/15 CANDELA VISUAL STROBE (CEILING MOUNTED)
(A)	AV 30	FIRE ALARM HORN/30 CANDELA VISUAL STROBE (CEILING MOUNTED)
	H W.P.	FIRE ALARM EXTERIOR HORN INN WALL
	WF	WATERFLOW SWITCH AT FIRE SPRINKLER RISER
	TS	TAMPER SWITCH AT FIRE DEPT. CONNECTION "F.D.C."
	B	ELECTRIC BELL (FOR FIRE SPRINKLER RISER)

TITLE 24, PART 6

THE CALIFORNIA ENERGY EFFICIENCY STANDARDS FOR NONRESIDENTIAL BUILDINGS HAS BEEN REVIEWED AND THE BUILDING DESIGN DESCRIBED ON THESE PAGES IS IN SUBSTANTIAL CONFORMANCE.

CODE, RULES AND REGULATIONS

ALL WORK AND MATERIALS SHALL COMPLY WITH THE LATEST REGULATIONS OF THE STATE FIRE MARSHAL, CALIFORNIA CODE OF REGULATIONS, SERVING UTILITY COMPANIES AND OTHER APPLICABLE STATE ORDINANCES. NOTHING IN THESE PLANS OR SPECIFICATIONS IS TO BE CONSTRUED AS TO PERMIT WORK NOT CONFORMING TO THESE CODES. WHERE WORK OF A HIGHER DEGREE IS INDICATED IN THE PLANS OR SPECIFICATIONS THIS REQUIREMENT SHALL GOVERN.

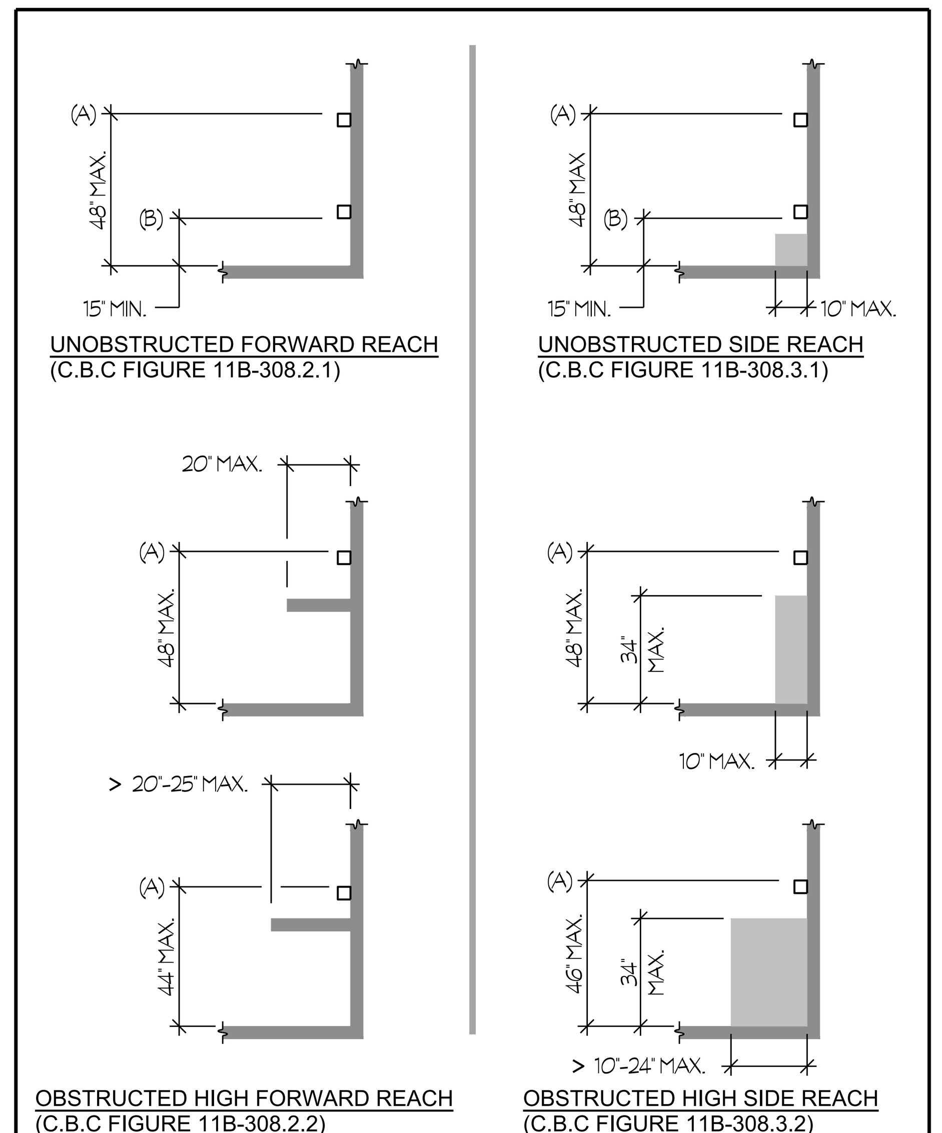

(A) TOP OF OUTLET BOX FOR RECEPTACLES, SWITCHES AND CONTROLS.

(B) BOTTOM OF OUTLET BOX FOR RECEPTACLES, SWITCHES AND CONTROLS.

1 ELECTRICAL RECEPTACLE, SWITCH AND CONTROL HEIGHTS

NTS

MINIMUM BATTERY STORAGE RATED ENERGY CAPACITY

PER BUILDING ENERGY EFFICIENCY STANDARDS
EQUATION 140.10-B
kWh(batt) = kW (PVdc) x B / (D ^ 0.5)

kW (PVdc) = 7.47 kW
B = 1.87 (PER TABLE 140.10-B)
D = 0.965 (PER EG4 ELECTRONICS 15kWh BATTERY)

kWh (batt) = 14.47
MORE THAN 10 kWh

(revision 1)

Rose Sing Eastham & Associates
Electrical Consultants
131 S. Dunworth – (559)733-2671
Visalia, California 93292-6705

REGISTERED PROFESSIONAL ENGINEER STEVEN KIRK EASTHAM No. E 18786 Exp. 6/30/25 ELECTRICAL STATE OF CALIFORNIA

rrm design group
rrmdesign.com | (805) 543-1794
3765 SOUTH HIGUERA STREET, SUITE 102
SAN LUIS OBISPO, CA 93401

THE INCLUDED DRAWINGS, SPECIFICATIONS, IDEAS, DESIGNS AND ARRANGEMENTS REPRESENTED THEREBY ARE AND SHALL REMAIN THE PROPERTY OF RRM DESIGN GROUP AND NO PART THEREOF SHALL BE COPIED, DISCLOSED TO OTHERS OR USED IN CONNECTION WITH ANY WORK OR PROJECT OTHER THAN THE SPECIFIED PROJECT FOR WHICH THEY HAVE BEEN PREPARED AND DEVELOPED WITHOUT THE WRITTEN CONSENT OF RRM DESIGN GROUP. VISUAL CONTACT WITH THESE DRAWINGS OR SPECIFICATIONS SHALL CONSTITUTE CONCLUSIVE EVIDENCE OF ACCEPTANCE OF THESE RESTRICTIONS. SUBMITTAL OF THESE DOCUMENTS FOR PUBLIC AGENCY REVIEW SHALL NOT BE CONSIDERED A WAIVER OF RRM DESIGN GROUP'S RIGHTS.
RRM DESIGN GROUP COPYRIGHT 2023
RRM IS A CALIFORNIA CORPORATION

CONSULTANT

AGENCY

100% CD SET
NOT FOR CONSTRUCTION

FOURTH ST COMMUNITY CENTER AND PARK
HENDERSON AVE., PORTERVILLE, CA 93257

ELEC. CODES, NOTES, SYMBOLS AND FIXTURE SCHEDULE

NO.	REVISION	DATE
1	PLAN CHECK REVISION 1	5/17/24
2	PLAN CHECK REVISION 2	9/12/24

PLAN CHECK REVISION 2

PROJECT MANAGER: JJ
DRAWN BY: CM
CHECKED BY: JJ
DATE: 2024.01.15
PROJECT NUMBER: 2883-01-RC22
SHEET: EG101

Z:\Drafting\Jobs\RSE\City of Porterville\Fourth Street Community Center & Park\EG101.dwg DATE SAVED: 05/20/24 BY: Casey DATE PLOTTED: 09/19/24 JOB #: 22-173-JJ

STATE OF CALIFORNIA
Indoor Lighting
CALIFORNIA ENERGY COMMISSION

CERTIFICATE OF COMPLIANCE — **NRCC-LTI-E**

This document is used to demonstrate compliance with requirements in 110.9, 110.12(c), 130.0, 130.1, 140.6 and 141.0(b)2 for indoor lighting scopes using the prescriptive path for nonresidential and hotel/motel occupancies. It is also used to document compliance with requirements in 160.5, 170.2(e) and 180.2(b)4 for indoor lighting scopes using the prescriptive path for multifamily occupancies. Multifamily includes dormitory and senior living facilities.

Project Name:	PORTERVILLE COMMUNITY CENTER	**Report Page:**	**(Page 1 of 8)**
Project Address: HENDERSON AVE		**Date Prepared:**	2024-06-05T11:26:41-04:00

A. GENERAL INFORMATION

01	Project Location (city)	PORTERVILLE	04 Total Conditioned Floor Area (ft^2)	15,549
02	Climate Zone	13	05 Total Unconditioned Floor Area (ft^2)	0
03	Occupancy Types Within Project (select all that apply):		06 # of Stories (Habitable Above Grade)	1

- Gymnasium

B. PROJECT SCOPE

This table includes any lighting systems that are within the scope of the permit application and are demonstrating compliance using the prescriptive path outlined in 140.6 / 170.2(e) or 141.0(b)2 / 180.2(b)4 for alterations.

Scope of Work	Conditioned Spaces		Unconditioned Spaces	
01	02	03	04	05
My Project Consists of (check all that apply):	Calculation Method	Area (ft^2)	Calculation Method	Area (ft^2)
☒ New Lighting System	Complete Building Method	15549	N/A	0
☐ New Lighting System - Parking Garage	N/A	0	N/A	0
Total Area of Work (ft^2)	15549			

STATE OF CALIFORNIA
Indoor Lighting
CALIFORNIA ENERGY COMMISSION

CERTIFICATE OF COMPLIANCE — **NRCC-LTI-E**

Project Name:	PORTERVILLE COMMUNITY CENTER	**Report Page:**	**(Page 2 of 8)**
		Date Prepared:	2024-06-05T11:26:41-04:00

C. COMPLIANCE RESULTS

If any cell on this table says "DOES NOT COMPLY" or "COMPLIES with Exceptional Conditions" refer to Table D. for guidance.

Lighting in conditioned and unconditioned spaces must not be combined for compliance per 140.6(b)1 / 170.2(e)	Allowed Lighting Power per 140.6(b) / 170.2(e) (Watts)						Adjusted Lighting Power per 140.6(a) / 170.2(e) (Watts)					Compliance Results
	01	02	03	04		05		06	07		08	09
	Complete Building 140.6(c)1	Area Category 140.6(c)2 / 170.2(e)4	Area Category Additional 140.6(c)2G / 170.2(e)4Av (+)	Tailored 140.6(c)3 / 170.2(e)4B (+)	=	**Total Allowed** (Watts)	≥	Total Designed (Watts)	Adjustments: PAF Lighting Control Credits 140.6(a)2 / 170.2(e)1B (-)	=	**Total Adjusted** (Watts) *Includes Adjustments	**05 must be >= 08 140.6 / 170.2(e)**
	(See Table I)	(See Table I)	(See Table J)	(See Table K)				(See Table H)	(See Table P)			
Conditioned	9,329.4				=	9,329.4	≥	8,816		=	8816	COMPLIES
Unconditioned					=		≥					
Controls Compliance (See Table H for Details)												COMPLIES
Rated Power Reduction Compliance (See Table Q for Details)												

D. EXCEPTIONAL CONDITIONS

This table is auto-filled with uneditable comments because of selections made or data entered in tables throughout the form.

E. ADDITIONAL REMARKS

This table includes remarks made by the permit applicant to the Authority Having Jurisdiction.

STATE OF CALIFORNIA
Indoor Lighting
CALIFORNIA ENERGY COMMISSION

CERTIFICATE OF COMPLIANCE — **NRCC-LTI-E**

Project Name:	PORTERVILLE COMMUNITY CENTER	**Report Page:**	**(Page 3 of 8)**
		Date Prepared:	2024-06-05T11:26:41-04:00

F. INDOOR LIGHTING FIXTURE SCHEDULE

This table includes all planned permanent and portable lighting other than dwelling unit/ hotel/ motel room lighting. Multifamily dwelling unit and hotel/motel room lighting is documented in Table T. If using Table T to document lighting in multifamily common use areas providing shared providions for living, eating, cooking or sanitation, those luminaires are not included here.

Designed Wattage: Conditioned Spaces

01	02	03	04	05	06	07	08	09	10	
Name or Item	Complete Luminaire Description	Modular (Yes/No)	Small Aperture & Color Changing	Watts per Luminaire	How is Wattage determined	Total Number of Luminaires	Excluded per 140.6(a)3 / 170.2(e)2	Design Watts	Field Inspector: Pass	Fail
A, AE	L.E.D. PENDANT	No	NA	131	Mfr. Spec	35	No	4,585	☐	☐
B, BE	2' x 4' L.E.D. GRID TROFFER	No	NA	32	Mfr. Spec	16	No	512	☐	☐
C, CE	1' x 4' SURFACE L.E.D.	No	NA	27	Mfr. Spec	17	No	459	☐	☐
D, DE	1' x 4' SURFACE L.E.D.	No	NA	39	Mfr. Spec	4	No	156	☐	☐
E, EE	RECESSED L.E.D. DOWNLIGHT	No	NA	25	Mfr. Spec	20	No	500	☐	☐
F4, F4E	4' LINEAR L.E.D.	No	NA	32	Mfr. Spec	3	No	96	☐	☐
F8, F8E	8' LINEAR L.E.D.	No	NA	64	Mfr. Spec	12	No	768	☐	☐
F12, F12E	12' LINEAR L.E.D.	No	NA	96	Mfr. Spec	5	No	480	☐	☐
F16	16' LINEAR L.E.D.	No	NA	128	Mfr. Spec	1	No	128	☐	☐
G	CIRCULAR L.E.D. PENDANT	No	NA	115	Mfr. Spec	2	No	230	☐	☐
H, HE	4" L.E.D. PENDANT	No	NA	26	Mfr. Spec	5	No	130	☐	☐
J, JE	2' x 2' RECESSED L.E.D.	No	NA	118	Mfr. Spec	6	No	708	☐	☐
K	L.E.D. VANITY LIGHT	No	NA	16	Mfr. Spec	4	No	64	☐	☐
							Total Designed Watts: CONDITIONED SPACES	8,816		

[1]*FOOTNOTE: Design Watts for small aperture and color changing luminaires which qualify per 140.6(a)4B / 170.2(e)2D is adjusted to be 75% /80% of their rated wattage. Table F automatically makes this adjustment, the permit applicant should enter full rated wattage in column 05.*

[2]*Authority Having Jurisdiction may ask for Luminaire cut sheets to confirm wattage used for compliance per 130.0(c) / 160.5(b). Wattage used must be the maximum rated for the luminaire, not the lamp.*

△1

STATE OF CALIFORNIA
Indoor Lighting
CALIFORNIA ENERGY COMMISSION

CERTIFICATE OF COMPLIANCE — **NRCC-LTI-E**

Project Name:	PORTERVILLE COMMUNITY CENTER	**Report Page:**	**(Page 4 of 8)**
		Date Prepared:	2024-06-05T11:26:41-04:00

G. MODULAR LIGHTING SYSTEMS

This section does not apply to this project.

H. INDOOR LIGHTING CONTROLS (Not including PAFs)

This table includes lighting controls for conditioned and unconditioned spaces.

Building Level Controls

01	02	03	
Mandatory Demand Response 110.12(c)	Shut-off controls 130.1(c) / 160.5)b4C	Field Inspector: Pass	Fail
Required >= 4,000W subject to multilevel	See Area/Space Level Controls	☐	☐

Area Level Controls

04	05	06	07	08	09	10	11	12	
Area Description	Complete Building or Area Category Primary Function Area	Manual Area Controls 130.1(a) / 160.5(b)4A	Multi-Level Controls 130.1(b) / 160.5(b)4B	Shut-Off Controls 130.1(c) // 160.5(b)4C	Primary/Skylit Daylighting 130.1(d) / 160.5(b)4D	Secondary Daylighting 130.1(d) / 160.5(b)4D	Interlocked Systems 140.6(a)1/ 170.2(e)2A	Field Inspector: Pass	Fail
COMMUNITY CENTER	Gymnasium	Readily Accessible	Dimmer	Occupancy Sensor	Included	Included	No	☐	☐
					13				
					Plan Sheet Showing Daylit Zones:				
					E103				

I. LIGHTING POWER ALLOWANCE: COMPLETE BUILDING OR AREA CATEGORY METHODS

Each area complying using the Complete Building or Area Category Methods per 140.6(b) are included in this table. Column 06 indicates if additional lighting power allowances per 140.6(c) or adjustments per 140.6(a) are being used .

Conditioned Spaces

01	02	03	04	05	06

STATE OF CALIFORNIA
Indoor Lighting
CALIFORNIA ENERGY COMMISSION

CERTIFICATE OF COMPLIANCE — **NRCC-LTI-E**

Project Name:	PORTERVILLE COMMUNITY CENTER	**Report Page:**	**(Page 5 of 8)**
		Date Prepared:	2024-06-05T11:26:41-04:00

Area Description	Complete Building or Area Category Primary Function Area	Allowed Density (W/ft^2)	Area (ft^2)	Allowed Wattage (Watts)	Additional Allowance / Adjustment: Area Category	PAF
COMMUNITY CENTER	Gymnasium	0.6	15,549	9,329.4	No	No
		TOTALS:	15,549	9,329.4	See Tables J, or P for detail	

J. ADDITIONAL ALLOWANCE: AREA CATEGORY METHOD QUALIFYING LIGHTING SYSTEM

This section does not apply to this project.

K. TAILORED METHOD GENERAL LIGHTING POWER ALLOWANCE

This section does not apply to this project.

L. ADDITIONAL LIGHTING ALLOWANCE: TAILORED WALL DISPLAY

This section does not apply to this project.

M. ADDITIONAL LIGHTING ALLOWANCE: TAILORED FLOOR AND TASK LIGHTING

This section does not apply to this project.

N. ADDITIONAL LIGHTING ALLOWANCE: TAILORED DECORATIVE /SPECIAL EFFECTS

This section does not apply to this project.

O. ADDITIONAL LIGHTING ALLOWANCE: TAILORED VERY VALUABLE MERCHANDISE

This section does not apply to this project.

STATE OF CALIFORNIA
Indoor Lighting
CALIFORNIA ENERGY COMMISSION

CERTIFICATE OF COMPLIANCE — **NRCC-LTI-E**

Project Name:	PORTERVILLE COMMUNITY CENTER	**Report Page:**	**(Page 6 of 8)**
		Date Prepared:	2024-06-05T11:26:41-04:00

P. POWER ADJUSTMENT: LIGHTING CONTROL CREDIT (POWER ADJUSTMENT FACTOR (PAF))

This section does not apply to this project.

Q. RATED POWER REDUCTION COMPLIANCE FOR ONE-FOR-ONE ALTERATIONS

This section does not apply to this project.

R. 80% LIGHTING POWER FOR ALL ALTERATIONS - CONTROLS EXCEPTIONS

This section does not apply to this project.

S. DAYLIGHT DESIGN POWER ADJUSTMENT FACTOR (PAF)

This section does not apply to this project.

T. DWELLING UNIT LIGHTING

This section does not apply to this project.

U. DECLARATION OF REQUIRED CERTIFICATES OF INSTALLATION

Selections have been made based on information provided in this document. If any selections have been changed by permit applicant, an explanation should be included in Table E. Additional Remarks. These documents must be provided to the building inspector during construction and can be found online

Form/Title
NRCI-LTI-E - Must be submitted for all buildings

STATE OF CALIFORNIA
Indoor Lighting
CALIFORNIA ENERGY COMMISSION

CERTIFICATE OF COMPLIANCE — **NRCC-LTI-E**

Project Name:	PORTERVILLE COMMUNITY CENTER	**Report Page:**	**(Page 7 of 8)**
		Date Prepared:	2024-06-05T11:26:41-04:00

V. DECLARATION OF REQUIRED CERTIFICATES OF ACCEPTANCE

Selections have been made based on information provided in this document. If any selections have been changed by the permit applicant, an explanation should be included in Table E. Additional Remarks. These documents must be provided to the building inspector during construction and any with "-A" in the form name must be completed through an Acceptance Test Technician Certification Provider (ATTCP). For more information visit: http://www.energy.ca.gov/title24/attcp/providers.html

Form/Title	Systems/Spaces To Be Field Verified
NRCA-LTI-02-A - Must be submitted for occupancy sensors and automatic time switch controls.	COMMUNITY CENTER
NRCA-LTI-03-A - Must be submitted for automatic daylight controls.	COMMUNITY CENTER
NRCA-LTI-04-A - Must be submitted for demand responsive lighting controls.	COMMUNITY CENTER

STATE OF CALIFORNIA
Indoor Lighting
CALIFORNIA ENERGY COMMISSION

CERTIFICATE OF COMPLIANCE — **NRCC-LTI-E**

Project Name:	PORTERVILLE COMMUNITY CENTER	**Report Page:**	**(Page 8 of 8)**
Project Address: HENDERSON AVE		**Date Prepared:**	2024-06-05T11:26:41-04:00

DOCUMENTATION AUTHOR'S DECLARATION STATEMENT

I certify that this Certificate of Compliance documentation is accurate and complete.

Documentation Author Name: Jeff Jackson	Documentation Author Signature:
Company: Rose Sing Eastham & Associates	Signature Date: 23-12-19
Address: 131 S DUNWORTH	CEA/ HERS Certification Identification (if applicable):
City/State/Zip: VISALIA, CA 93292	Phone: 559-733-2671 EXT. 104

RESPONSIBLE PERSON'S DECLARATION STATEMENT

I certify the following under penalty of perjury, under the laws of the State of California:

1. The information provided on this Certificate of Compliance is true and correct.
2. I am eligible under Division 3 of the Business and Professions Code to accept responsibility for the building design or system design identified on this Certificate of Compliance (responsible designer)
3. The energy features and performance specifications, materials, components, and manufactured devices for the building design or system design identified on this Certificate of Compliance conform to the requirements of Title 24, Part 1 and Part 6 of the California Code of Regulations.
4. The building design features or system design features identified on this Certificate of Compliance are consistent with the information provided on other applicable compliance documents, worksheets, calculations, plans and specifications submitted to the enforcement agency for approval with this building permit application.
5. I will ensure that a completed signed copy of this Certificate of Compliance shall be made available with the building permit(s) issued for the building, and made available to the enforcement agency for all applicable inspections. I understand that a completed signed copy of this Certificate of Compliance is required to be included with the documentation the builder provides to the building owner at occupancy.

Responsible Designer Name: Steven Eastham	Responsible Designer Signature:
Company: Rose Sing Eastham	Date Signed: 23-12-19
Address: 131 S DUNWORTH	License: E-18786
City/State/Zip: VISALIA, CA 93292	Phone: 559-733-2671 EXT. 101

Rose Sing Eastham & Associates
Electrical Consultants
131 S. Dunworth – (559)733–2671
Visalia, California 93292–6705

REGISTERED PROFESSIONAL ENGINEER
STEVEN KIRK EASTHAM
No. E18786
Exp. 6/30/25
ELECTRICAL
STATE OF CALIFORNIA

rrm design group
rrmdesign.com | (805) 543-1794
3765 SOUTH HIGUERA STREET, SUITE 102
SAN LUIS OBISPO, CA 93401

THE INCLUDED DRAWINGS, SPECIFICATIONS, IDEAS, DESIGNS AND ARRANGEMENTS REPRESENTED THEREBY ARE AND SHALL REMAIN THE PROPERTY OF RRM DESIGN GROUP AND NO PART THEREOF SHALL BE COPIED, DISCLOSED TO OTHERS OR USED IN CONNECTION WITH ANY WORK OR PROJECT OTHER THAN THE SPECIFIC PROJECT FOR WHICH THEY HAVE BEEN PREPARED AND DEVELOPED WITHOUT THE WRITTEN CONSENT OF RRM DESIGN GROUP. VISUAL CONTACT WITH THESE DRAWINGS OR SPECIFICATIONS SHALL CONSTITUTE DISCLAIMER EVIDENCE OF ACCEPTANCE OF THESE RESTRICTIONS. ANY LIMITED DISTRIBUTION OF THESE DRAWINGS OR SPECIFICATIONS SHALL NOT BE CONSIDERED A WAIVER OF RRM DESIGN GROUP'S RIGHTS.
RRM DESIGN GROUP COPYRIGHT 2023
RRM IS A CALIFORNIA CORPORATION

CONSULTANT

AGENCY

100% CD SET
NOT FOR CONSTRUCTION

FOURTH ST COMMUNITY CENTER AND PARK
HENDERSON AVE., PORTERVILLE, CA 93257

INDOOR LIGHTING COMPLIANCE

NO.	REVISION	DATE
1	PLAN CHECK REVISION 1	5/17/24
2	PLAN CHECK REVISION 2	9/12/24
△		
△		
△		
△		

PLAN CHECK REVISION 2

PROJECT MANAGER JJ
DRAWN BY CM **CHECKED BY** JJ
DATE 2024.01.15
PROJECT NUMBER 2883-01-RC22
SHEET EG102

Z:\Drafting\Jobs\RSA\City of Porterville\Fourth Street Community Center & Park\EG102.dwg DATE: SAVED: 05/15/24 By: Corey DATE PLOTTED: 09/19/24 JOB # 22-173-J

STATE OF CALIFORNIA
Outdoor Lighting
CALIFORNIA ENERGY COMMISSION

CERTIFICATE OF COMPLIANCE — **NRCC-LTO-E**

This document is used to demonstrate compliance with requirements in 110.9, 130.0, 130.2, 140.7, and 141.0(b)2L for outdoor lighting scopes using the prescriptive path for nonresidential and hotel/motel occupancies. It is also used to document compliance with requirements in 160.5, 170.2(e)6, 180.1(a) and 180.2(b)4Bv for outdoor lighting scopes using the prescriptive path for multifamily and mixed-use occupancies. Multifamily includes dormitory and senior living facilities.

Project Name:	PORTERVILLE COMMUNITY CENTER	**Report Page:**	**(Page 1 of 8)**
Project Address: HENDERSON AVE		**Date Prepared:**	2024-06-05T11:30:15-04:00

A. GENERAL INFORMATION

01	Project Location (city)	PORTERVILLE	04 Total Illuminated Hardscape Area (ft²)	213013
02	Climate Zone	13		
03	Outdoor Lighting Zone per Title 24 Part 1 10.114 or as designated by Authority Having Jurisdiction (AHJ):			
☐	LZ-0: Very Low - Undeveloped Parkland	☐ LZ-2: Moderate - Urban Clusters	☐ LZ-4: High - Must be reviewed by CA Energy Commission for Approval	
☐	LZ-1: Low - Rural Areas	☒ LZ-3: Moderately High - Urban Areas		
05	Occupancy Types within Project			
● Gymnasium				

B. PROJECT SCOPE

This table includes outdoor lighting systems that are within the scope of the permit application and are demonstrating compliance using the prescriptive path outlined in 140.7 / 170.2(e)6 or 141.0(b)2L / 180.2(b)4Bv for alterations.

My Project Consists of:

01	02		
☒ New Lighting System	Must Comply with Allowances from 140.7 / 170.2(e)6		
☐ Altered Lighting System	Is your alteration increasing the connected lighting load (Watts)?	○ Yes	○ No
03	04	05	
% of Existing Luminaires Being Altered[1]	Sum Total of Luminaires Being Added or Altered	Calculation Method	
☐ < 10% ☐ >= 10% and < 50% ☐ >= 50%			

Please proceed to Table F. Outdoor Lighting Fixture Schedule to define the project's luminaires.

[1] FOOTNOTES: % of Existing Luminaires Being Altered = (Sum Total of Luminaires Being Added or Altered / Existing Luminaires within the Scope of the Permit Application) x 100.

C. COMPLIANCE RESULTS

Results in this table are automatically calculated from data input and calculations in Tables F through N. Note: If any cell on this table says "COMPLIES with Exceptional Conditions" refer to Table D. Exceptional Conditions for guidance or see applicable Table referenced below.

Calculations of Total Allowed Lighting Power (Watts) 140.7 / 170.2(e)6 or 141.0(b)2L / 180.2(b)4Bv										Compliance Results		
01		02		03		04		05		06		07		08	09
General Hardscape Allowance 140.7(d)1 / 170.2(e)6 (See Table I)	+	Per Application 140.7(d)2 / 170.2(e)6 (See Table J)	+	Sales Frontage 140.7(d)2 (See Table K)	+	Ornamental 140.7(d)2 / 170.2(e)6 (See Table L)	+	Per Specific Area 140.7(d)2 / 170.2(e)6 (See Table M)	OR	Existing Power Allowance 141.0(b)2L / 180.2(b)4Bv (See Table N)	=	**Total Allowed** (Watts)	≥	**Total Actual** (Watts)	**07 must be >= 08**
5,118.27	+	---	+	---	+	---	+	---	OR	---	=	5,118.27	≥	3,146	COMPLIES
Shielding Compliance (See Table G for Details)															COMPLIES
Controls Compliance (See Table H for Details)															COMPLIES

D. EXCEPTIONAL CONDITIONS

This table is auto-filled with uneditable comments because of selections made or data entered in tables throughout the form.

E. ADDITIONAL REMARKS

This table includes remarks made by the permit applicant to the Authority Having Jurisdiction.

F. OUTDOOR LIGHTING FIXTURE SCHEDULE

For new or altered lighting systems demonstrating compliance with 140.7 / 170.2(e)6 all new luminaires being installed and any existing luminaires remaining or being moved within the spaces covered by the permit application are included in the Table below. For altered lighting systems using the Existing Power method per 141.0(b)2L only new luminaires being installed and replacement luminaires being installed as part of the project scope are included (ie, existing luminaires remaining or existing luminaires being moved are not included). Outdoor lighting attached to multifamily buildings and controlled from the inside of a dwelling unit are included in Table H. and are not included here. All other multifamily outdoor lighting is included here.

Designed Wattage:

01	02		03	04	05	06	07	08	09	10	
Name or Item Tag	Complete Luminaire Description		Watts per luminaire[1, 2]	How is Wattage determined	Total Number Luminaires[2]	Luminaire Status[3]	Excluded per 140.7(a) / 170.2(e)6A	Design Watts	Cutoff Req. > 6,200 initial lumen output 130.2(b) / 160.5(c)1[4]	Field Inspector	
										Pass	Fail
L2, L2E	L.E.D. WALL PACK	☐ Linear	25	Mfr. Spec	19	New	☐	475	NA: < 6200 lumens	☐	☐
S2	25' L.E.D. POLE LIGHT	☐ Linear	138	Mfr. Spec	8	New	☐	1,104	Provided	☐	☐
B1	L.E.D. WALKWAY BOLLARD	☐ Linear	13	Mfr. Spec	9	New	☐	117	NA: < 6200 lumens	☐	☐
L3, L3E	VANDAL RESISTANT 4' LINEAR L.E.D.	☐ Linear	20	Mfr. Spec	11	New	☐	220	NA: < 6200 lumens	☐	☐
L4	2' L.E.D. WALL LIGHT	☐ Linear	27	Mfr. Spec	4	New	☐	108	NA: < 6200 lumens	☐	☐
L5	4' L.E.D. WALL LIGHT	☐ Linear	51	Mfr. Spec	22	New	☐	1,122	NA: < 6200 lumens	☐	☐
								Total Design Watts:	3146		

* NOTES: Selections with a * require a note in the space below explaining how compliance is achieved.
EX: Luminaire is lighting a statue; EXCEPTION 2 to 130.2(b)
[1] FOOTNOTE: Authority Having Jurisdiction may ask for Luminaire cut sheets or other documentation to confirm luminaire type, uplight ratings and glare ratings used for compliance per 130.2(b)/ 160.5(c)
[2] For linear luminaires, wattage should be indicated as W/lf instead of Watts/luminaire. Total linear feet should be indicated in column 05 instead of number of luminaires.
[3] Select "New" for new luminaires in a new outdoor lighting project, or for added luminaires in an alteration. Select "Altered" for replacement luminaires in an alteration. Select "Existing to Remain" for existing luminaires within the project scope that are not being altered and are remaining. Select "Existing Reinstalled" for existing luminaires which are being removed and reinstalled as part of the project scope.
[4] Compliance with mandatory shielding requirements is required for luminaires with initial lumen output >= 6,200 unless exempted by 130.2(b)/ 160.5(c)

1

G. SHIELDING REQUIREMENTS (BUG)

This table includes fixtures of >=6,200 initial lumens indicated on Table F as needing to comply with Shielding Requirements. Maximum lumens can be found in Title 24, Part 11, Section 5.106.8.

01	02	03		04	05	06	07	08	09		10	11	12	
Name or Item Tag	Complete Luminaire Description	Backlight Rating[2]				Uplight Rating[2]			Glare Rating (Lumens)[2]				Field Inspector	
		Mounting Height[1]	Max Allowable Backlight Rating[3]	Backlight Rating Per Design		Lighting type	Max Allowable Uplight Rating[3]	Uplight Rating Per Design	Mounting Height[1]	Max Allowable Glare Rating[3]	Glare Rating Per Design		Pass	Fail
S2	25' L.E.D. POLE LIGHT	2 MH from property line	No Limit	B0		Area Lighting	U0	U0	> 2 MH from property line	G3	G3		☐	☐

[1] FOOTNOTES: Mounting Height is labeled MH in this table.
[2] Authority Having Jurisdiction may ask for Luminaire cut sheets or other documentation to confirm luminaire type, uplight ratings and glare ratings used for compliance per 130.2(b)/ 160.5(c)
[3] BUG ratings with a lower number than the 'Max Allowable' are compliant. Ex. If Max Allowable is Bug Rating B4, then B0, B1, B2 and B3 are all compliant.

H. OUTDOOR LIGHTING CONTROLS

This table demonstrates compliance with controls requirements for all new or altered luminaires installed as part of the permit application. For alteration projects, luminaires which are existing to remain (ie untouched) and luminaires which are removed and reinstalled (wiring only) do not need to be included in this table even if they are within the spaces covered by the permit application.
Outdoor lighting for nonresidential buildings, parking garages and common service areas in multifamily buildings must be documented separately from outdoor lighting attached to multifamily buildings and controlled from the inside of a dwelling unit

Mandatory Controls for Nonresidential Occupancies, Parking Garages & Common Areas in Multifamily Buildings

01	02	03	04	05	
Area Description	Shut-Off 130.2(c)1 / 160.5(c)	Auto-Schedule 130.2(c)2 / 160.5(c)	Motion Sensor 130.2(c)3 / 160.5(c)	Field Inspector	
				Pass	Fail
GENERAL HARDSCAPE: "L2, L2E"	Astronomical Timer	Provided	NA: Each Luminaire <= 40 Watts	☐	☐
GENERAL HARDSCAPE: "S2"	Astronomical Timer	Provided	Provided	☐	☐
GENERAL HARDSCAPE: "B1"	Astronomical Timer	Provided	NA: Each Luminaire <= 40 Watts	☐	☐
GENERAL HARDSCAPE: "L3, L3E"	Astronomical Timer	Provided	NA: Each Luminaire <= 40 Watts	☐	☐
GENERAL HARDSCAPE: "L4"	Astronomical Timer	Provided	NA: Public Monument Lighting	☐	☐
GENERAL HARDSCAPE: "L5"	Astronomical Timer	Provided	NA: Public Monument Lighting	☐	☐

[1] FOOTNOTE: Text has been abbreviated, please refer to Table 160.5-A to confirm compliance with the specific light source technologies listed.
[2] Authority having jurisdiction may ask for cutsheets or other documentation to confirm compliance of light source.
[3] Recessed luminaires marked for use in fire-rated installations, and recessed luminaires installed in non-insulated ceilings are excepted from ii and iii.

I. LIGHTING POWER ALLOWANCE (per 140.7 / 170.2(e))

This table includes areas using allowance calculations per 140.7 / 170.2(e). General Hardscape Allowance is per Table 140.7-A/Table 170.2-R while "Use it or lose it" Allowances are per Table 140.7-B /Table 170.2-S. Indicate which allowances are being used to expand sections for user input. Luminaires that qualify for one of the "Use it or lose it" allowances shall not qualify for another "Use it or lose it" allowance.
Outdoor lighting attached to multifamily buildings and controlled from the inside of a dwelling unit are included in Table H. and are not included here. All other multifamily outdoor lighting is included here.

01				
☒ General Hardscape Allowance Table I (below)	"Use it or lose it" Allowance (select all that apply) (select all that apply)			
	☐ Per Application Table J	☐ Sales Frontage Table K	☐ Ornamental Table L	☐ Per Specific Area Table M

Calculated General Hardscape Lighting Power Allowance per Table 140.7-A for Nonresidential & Hotel/Motel

02	03	04	05	06	07	08	09
Area Description	Area Wattage Allowance (AWA)			Linear Wattage Allowance (LWA)			Total General AWA + LWA (Watts)
	Illuminated Area (ft²)	Allowed Density (W/ft²)	Area Allowance (Watts)	Perimeter Length (lf)	Allowed Density (W/lf)	Linear Allowance (Watts)	
GENERAL HARDSCAPE	213013	0.021	4473.27	1975	0.2	395	4868.27
Initial Wattage Allowance for Entire Site (Watts):							250
Instances of Initial Wattage Allowance (LZ 0 only)[1]							
Total General Hardscape Allowance (Watts):							5118.27

J. LIGHTING ALLOWANCE: PER APPLICATION

This section does not apply to this project.

K. LIGHTING ALLOWANCE: SALES FRONTAGE

This section does not apply to this project.

L. LIGHTING ALLOWANCE: ORNAMENTAL

This section does not apply to this project.

M. LIGHTING ALLOWANCE: PER SPECIFIC AREA

This section does not apply to this project.

N. EXISTING CONDITIONS POWER ALLOWANCE (alterations only)

This section does not apply to this project.

O. DECLARATION OF REQUIRED CERTIFICATES OF INSTALLATION

Selections have been made based on information provided in this document. If any selection has been changed by permit applicant, an explanation should be included in Table E. Additional Remarks. These documents must be provided to the building inspector during construction and can be found online

Form/Title
NRCI-LTO-E - Must be submitted for all buildings

P. DECLARATION OF REQUIRED CERTIFICATES OF ACCEPTANCE

Selections have been made based on information provided in this document. If any selection has been changed by permit applicant, an explanation should be included in Table E. Additional Remarks. These documents must be provided to the building inspector during construction and must be completed through an Acceptance Test Technician Certification Provider (ATTCP). For more information visit: http://www.energy.ca.gov/title24/attcp/providers.html

Form/Title	Systems/Spaces To Be Field Verified
NRCA-LTO-02-A - Must be submitted for all outdoor lighting controls except for alterations where controls are added to <= 20 luminaires.	GENERAL HARDSCAPE: "L2, L2E"; GENERAL HARDSCAPE: "S2"; GENERAL HARDSCAPE: "B1"; GENERAL HARDSCAPE: "L3, L3E"; GENERAL HARDSCAPE: "L4"; GENERAL HARDSCAPE: "L5"

DOCUMENTATION AUTHOR'S DECLARATION STATEMENT

I certify that this Certificate of Compliance documentation is accurate and complete.

Documentation Author Name: Jeff Jackson	Documentation Author Signature:
Company: Rose Sing Eastham & Associates	Signature Date: 23-12-19
Address: 131 S DUNWORTH	CEA/ HERS Certification Identification (if applicable):
City/State/Zip: VISALIA, CA 93292	Phone: 559-733-2671 EXT. 104

RESPONSIBLE PERSON'S DECLARATION STATEMENT

I certify the following under penalty of perjury, under the laws of the State of California:
1. The information provided on this Certificate of Compliance is true and correct.
2. I am eligible under Division 3 of the Business and Professions Code to accept responsibility for the building design or system design identified on this Certificate of Compliance (responsible designer)
3. The energy features and performance specifications, materials, components, and manufactured devices for the building design or system design identified on this Certificate of Compliance conform to the requirements of Title 24, Part 1 and Part 6 of the California Code of Regulations.
4. The building design features or system design features identified on this Certificate of Compliance are consistent with the information provided on other applicable compliance documents, worksheets, calculations, plans and specifications submitted to the enforcement agency for approval with this building permit application.
5. I will ensure that a completed signed copy of this Certificate of Compliance shall be made available with the building permit(s) issued for the building, and made available to the enforcement agency for all applicable inspections. I understand that a completed signed copy of this Certificate of Compliance is required to be included with the documentation the builder provides to the building owner at occupancy.

Responsible Designer Name: Steven Eastham	Responsible Designer Signature:
Company: Rose Sing Eastham	Date Signed: 23-12-19
Address: 131 S DUNWORTH	License: E-18786
City/State/Zip: VISALIA, CA 93292	Phone: 559-733-2671 EXT. 101

F. OUTDOOR LIGHTING FIXTURE SCHEDULE

For new or altered lighting systems demonstrating compliance with 140.7 / 170.2(e)6 all new luminaires being installed and any existing luminaires remaining or being moved within the spaces covered by the permit application are included in the Table below. For altered lighting systems using the Existing Power method per 141.0(b)2L only new luminaires being installed and replacement luminaires being installed as part of the project scope are included (ie, existing luminaires remaining or existing luminaires being moved are not included). Outdoor lighting attached to multifamily buildings and controlled from the inside of a dwelling unit are included in Table H. and are not included here. All other multifamily outdoor lighting is included here.

Designed Wattage:

01	02		03	04	05	06	07	08	09	10	
Name or Item Tag	Complete Luminaire Description		Watts per luminaire[1, 2]	How is Wattage determined	Total Number Luminaires[2]	Luminaire Status[3]	Excluded per 140.7(a) / 170.2(e)6A	Design Watts	Cutoff Req. > 6,200 initial lumen output 130.2(b) / 160.5(c)1[4]	Field Inspector	
										Pass	Fail
L2, L2E	L.E.D. WALL PACK	☐ Linear	25	Mfr. Spec	19	New	☐	475	NA: < 6200 lumens	☐	☐
S2	25' L.E.D. POLE LIGHT	☐ Linear	138	Mfr. Spec	8	New	☐	1,104	Provided	☐	☐
B1	L.E.D. WALKWAY BOLLARD	☐ Linear	13	Mfr. Spec	9	New	☐	117	NA: < 6200 lumens	☐	☐
L3, L3E	VANDAL RESISTANT 4' LINEAR L.E.D.	☐ Linear	20	Mfr. Spec	11	New	☐	220	NA: < 6200 lumens	☐	☐
L4	2' L.E.D. WALL LIGHT	☐ Linear	27	Mfr. Spec	4	New	☐	108	NA: < 6200 lumens	☐	☐
L5	4' L.E.D. WALL LIGHT	☐ Linear	51	Mfr. Spec	22	New	☐	1,122	NA: < 6200 lumens	☐	☐
								Total Design Watts:	3146		

* NOTES: Selections with a * require a note in the space below explaining how compliance is achieved.
EX: Luminaire is lighting a statue; EXCEPTION 2 to 130.2(b)
[1] FOOTNOTE: Authority Having Jurisdiction may ask for Luminaire cut sheets or other documentation to confirm luminaire type, uplight ratings and glare ratings used for compliance per 130.2(b)/ 160.5(c)
[2] For linear luminaires, wattage should be indicated as W/lf instead of Watts/luminaire. Total linear feet should be indicated in column 05 instead of number of luminaires.
[3] Select "New" for new luminaires in a new outdoor lighting project, or for added luminaires in an alteration. Select "Altered" for replacement luminaires in an alteration. Select "Existing to Remain" for existing luminaires within the project scope that are not being altered and are remaining. Select "Existing Reinstalled" for existing luminaires which are being removed and reinstalled as part of the project scope.
[4] Compliance with mandatory shielding requirements is required for luminaires with initial lumen output >= 6,200 unless exempted by 130.2(b)/ 160.5(c)

1

I. LIGHTING POWER ALLOWANCE (per 140.7 / 170.2(e))

This table includes areas using allowance calculations per 140.7 / 170.2(e). General Hardscape Allowance is per Table 140.7-A/Table 170.2-R while "Use it or lose it" Allowances are per Table 140.7-B /Table 170.2-S. Indicate which allowances are being used to expand sections for user input. Luminaires that qualify for one of the "Use it or lose it" allowances shall not qualify for another "Use it or lose it" allowance.
Outdoor lighting attached to multifamily buildings and controlled from the inside of a dwelling unit are included in Table H. and are not included here. All other multifamily outdoor lighting is included here.

01				
☒ General Hardscape Allowance Table I (below)	"Use it or lose it" Allowance (select all that apply) (select all that apply)			
	☐ Per Application Table J	☐ Sales Frontage Table K	☐ Ornamental Table L	☐ Per Specific Area Table M

Calculated General Hardscape Lighting Power Allowance per Table 140.7-A for Nonresidential & Hotel/Motel

02	03	04	05	06	07	08	09
Area Description	Area Wattage Allowance (AWA)			Linear Wattage Allowance (LWA)			Total General AWA + LWA (Watts)
	Illuminated Area (ft²)	Allowed Density (W/ft²)	Area Allowance (Watts)	Perimeter Length (lf)	Allowed Density (W/lf)	Linear Allowance (Watts)	
GENERAL HARDSCAPE	213013	0.021	4473.27	1975	0.2	395	4868.27
Initial Wattage Allowance for Entire Site (Watts):							250
Instances of Initial Wattage Allowance (LZ 0 only)[1]							
Total General Hardscape Allowance (Watts):							5118.27

J. LIGHTING ALLOWANCE: PER APPLICATION

This section does not apply to this project.

K. LIGHTING ALLOWANCE: SALES FRONTAGE

This section does not apply to this project.

L. LIGHTING ALLOWANCE: ORNAMENTAL

This section does not apply to this project.

Rose Sing Eastham & Associates
Electrical Consultants
131 S. Dunworth – (559)733–2671
Visalia, California 93292–6705

REGISTERED PROFESSIONAL ENGINEER
STEVEN KIRK EASTHAM
No. 18786
Exp. 6/30/25
ELECTRICAL
STATE OF CALIFORNIA

rrm design group
rrmdesign.com | (805) 543-1794
3765 SOUTH HIGUERA STREET, SUITE 102
SAN LUIS OBISPO, CA 93401

THE INCLUDED DRAWINGS, SPECIFICATIONS, IDEAS, DESIGNS AND ARRANGEMENTS REPRESENTED THEREBY ARE AND SHALL REMAIN THE PROPERTY OF RRM DESIGN GROUP AND NO PART THEREOF SHALL BE COPIED, DISCLOSED TO OTHERS OR SUBSTANTIALLY USED FOR ANY PURPOSE WHATSOEVER EXCEPT FOR THE PROJECT FOR WHICH THEY HAVE BEEN PREPARED AND DEVELOPED WITHOUT THE WRITTEN CONSENT OF RRM DESIGN GROUP. VISUAL CONTACT WITH THESE DRAWINGS OR SPECIFICATIONS SHALL CONSTITUTE CONCLUSIVE EVIDENCE OF ACCEPTANCE OF THESE RESTRICTIONS. IF THESE DRAWINGS OR SPECIFICATIONS ARE NOT RETURNED, IT SHALL NOT BE CONSIDERED A WAIVER OF RRM DESIGN GROUP'S RIGHTS.
RRM DESIGN GROUP COPYRIGHT 2023
RRM IS A CALIFORNIA CORPORATION

CONSULTANT

AGENCY

100% CD SET
NOT FOR CONSTRUCTION

FOURTH ST COMMUNITY CENTER AND PARK
HENDERSON AVE., PORTERVILLE, CA 93257

OUTDOOR LIGHTING COMPLIANCE

NO.	REVISION	DATE
1	PLAN CHECK REVISION 1	5/17/24
2	PLAN CHECK REVISION 2	9/12/24
△		
△		
△		
△		

PLAN CHECK REVISION 2

PROJECT MANAGER JJ
DRAWN BY CM
CHECKED BY JJ
DATE 2024.01.15
PROJECT NUMBER 2883-01-RC22
SHEET EG103

Z:\Drafting\Jobs\RSE\City of Porterville\Fourth Street Community Center & Park\EG103.dwg DATE SAVED: 05/16/24 By: Corey DATE PLOTTED: 09/19/24 JOB # 22-173-J

STATE OF CALIFORNIA

Electrical Power Distribution

CALIFORNIA ENERGY COMMISSION

CERTIFICATE OF COMPLIANCE			NRCC-ELC-E
This document is used to demonstrate compliance with mandatory requirements in 130.5, for electrical systems in newly constructed nonresidential and hotel/motel occupancies and 160.6 and 160.9 for electrical systems in newly constructed multifamily occupancies. Additions and alterations to electrical service systems in nonresidential and hotel/motel occupancies will also use this document to demonstrate compliance per 141.0(a) or 141.0(b)2P for alterations. For multifamily addition or alterations compliance will be documented per 180.1(a) or 180.2 (b)4Bvii			
Project Name: PORTERVILLE COMMUNITY CENTER		**Report Page:**	**(Page 1 of 6)**
Project Address: HENDERSON AVE		**Date Prepared:**	2023-12-19T15:51:49-05:00

A. GENERAL INFORMATION

01	Project Location (city)	PORTERVILLE	02	Climate Zone	13
			03	Occupancy Types Within Project:	Gymnasium

B. PROJECT SCOPE

This table includes electrical systems that are within the scope of the permit application.

01	02	03	04	05	06	07
Electrical Service Designation/ Description	Scope of Work[1]	Rating[2] (kVA)	Utility Provided Metering System Exception to 130.5(a)/ 160.6(a)[3]	System subject to CA Elec Code Article 517 Exception to 130.5(a)and (b)	Demand Response Controls	Provides power to dwelling units/common living areas only in multifamily occupancy
NEW MAIN SWITCHBOARD "MSB"	New electrical service equipment and meter	532	☒	☐	Where required, demand response controls must be specified which are capable of receiving and automatically responding to at least one standards based messaging protocol which enables demand response after receiving a demand response signal. Sections 120.2/ 160.3, 130.1/ 160.5, and 130.3/ 160.5, and mechanical, indoor lighting, and sign lighting Certificate of Compliance documents will indicate when demand response controls are required.	☐

[1]FOOTNOTES: Adding only new feeders and branch circuits triggers Voltage Drop 130.5(c)/160.6(c), no other requirements from 130.5/160.6 are required.
[2] If common use areas in a multifamily are submetered, rating is for submeter size serving common use areas.
[3] Applicable if the utility company is providing a metering system that indicates instantaneous kW demand and kWh for a utility-defined period.

STATE OF CALIFORNIA

Electrical Power Distribution

CALIFORNIA ENERGY COMMISSION

CERTIFICATE OF COMPLIANCE			NRCC-ELC-E
Project Name: PORTERVILLE COMMUNITY CENTER		**Report Page:**	**(Page 2 of 6)**
		Date Prepared:	2023-12-19T15:51:49-05:00

C. COMPLIANCE RESULTS

Results in this table are automatically calculated from data input and calculations in Tables F through J. Note: If any cell on this table says "COMPLIES with Exceptional Conditions" refer to Table D. Exceptional Conditions for guidance or see applicable Table referenced below.

01		02		03		04	05	06
Service Electrical Metering 130.5(a)/ 160.6(a) (See Table F)	AND	Separation for Monitoring 130.5(b)/ 160.6(b) (See Table G)	AND	Voltage Drop 130.5(c)/ 160.6(c) (See Table H)	AND	Controlled Receptacles 130.5(d)/ 160.6(d) (See Table I)	Electric Ready 160.9 (See Table J)	**Compliance Results**
	AND	Yes	AND	Yes	AND	Yes		COMPLIES with Exceptional Conditions

D. EXCEPTIONAL CONDITIONS

This table is auto-filled with uneditable comments because of selections made or data entered in tables throughout the form.

Table B indicates the project is exempt from 130.5(a) Service Electrical Metering requirements because the utility company has provided the project a metering system that indicates instantaneous kW demand and kWh for a utility-defined period.

E. ADDITIONAL REMARKS

This table includes remarks made by the permit applicant to the Authority Having Jurisdiction.

STATE OF CALIFORNIA

Electrical Power Distribution

CALIFORNIA ENERGY COMMISSION

CERTIFICATE OF COMPLIANCE			NRCC-ELC-E
Project Name: PORTERVILLE COMMUNITY CENTER		**Report Page:**	**(Page 3 of 6)**
		Date Prepared:	2023-12-19T15:51:49-05:00

G. SEPARATION OF ELECTRICAL CIRCUITS FOR ENERGY MONITORING

This table includes entirely new or complete replacement electrical power distribution systems to demonstrate compliance with 130.5(b)/ 160.6(b). Any load types that are not included in the service do not need to be shown. For multifamily occupancies, submetered systems that provide power to dwelling units do not need to meet these separation requirements and therefore load types on those submetered systems also do not need to be shown.

01	02	03	04	05	
Load Type per Table 130.5-B[1]	Minimum Required Separation of Load per Table 130.5-B	Compliance Method[2]	Location of Requirements in Construction Documents	Field Inspector	
				Pass	Fail
NEW MAIN SWITCHBOARD "MSB"					
Lighting including exit, egress and exterior	All lighting disaggregated by floor, type or area	Method 3: Branch circuits serve load types individually & provisions for adding future branch curcuit monitoring	E101-E103	☐	☐
Plug Loads and appliances less than 25kVA	All plug loads separated by floor, type or area Groups of plug loads exceeding 25 kVA connected load in an area less than 5000 sf	Method 3: Branch circuits serve load types individually & provisions for adding future branch curcuit monitoring	E201	☐	☐
HVAC systems and components	All HVAC in aggregate and each HVAC load rated at least 50 kVA	Method 3: Branch circuits serve load types individually & provisions for adding future branch curcuit monitoring	E202	☐	☐
Charging stations for electrical vehicle	All loads in aggregate	Method 3: Branch circuits serve load types individually & provisions for adding future branch curcuit monitoring	ES102	☐	☐

STATE OF CALIFORNIA

Electrical Power Distribution

CALIFORNIA ENERGY COMMISSION

CERTIFICATE OF COMPLIANCE			NRCC-ELC-E
Project Name: PORTERVILLE COMMUNITY CENTER		**Report Page:**	**(Page 4 of 6)**
		Date Prepared:	2023-12-19T15:51:49-05:00

G. SEPARATION OF ELECTRICAL CIRCUITS FOR ENERGY MONITORING

This table includes entirely new or complete replacement electrical power distribution systems to demonstrate compliance with 130.5(b)/ 160.6(b). Any load types that are not included in the service do not need to be shown. For multifamily occupancies, submetered systems that provide power to dwelling units do not need to meet these separation requirements and therefore load types on those submetered systems also do not need to be shown.

01	02	03	04	05	
Load Type per Table 130.5-B[1]	Minimum Required Separation of Load per Table 130.5-B	Compliance Method[2]	Location of Requirements in Construction Documents	Field Inspector	
				Pass	Fail

** NOTES: If "Other*" is selected under Compliance Method above, please indicate how compliance has been achieved in the space provided below.*

[1] FOOTNOTES: For each separate load type, up to 10% of the connected load may be of any type.
[2] Method 1: Switchboards/ motor control centers/ panelboard loads disaggregated for each load type.
Method 2: Switchboards/ motor control centers/ panelboard supply other distribution equipment with loads disaggregated for each load type.
Method 3: Branch circuits serve load types individually and provisions for adding future branch circuit monitoring.
Method 4: Complete metering system measures and reports loads by type.
See Chapter 8 of the Nonresidential Compliance Manual for more detail on Compliance Methods.

H. VOLTAGE DROP

This table includes entirely new or complete replacement electrical power distribution systems, or alterations that add, modify or replace both feeders and branch circuits to demonstrate compliance with 130.5(c)/ 160.6(c). For alterations, only the altered circuits must demonstrate compliance per 141.0(b)2Piii/ 180.2(b)4Bviic.

01	02				03	04	05	
Electrical Service Designation/Description	Combined Voltage Drop on Installed Feeder/Branch Circuit Conductors Compliance Method				Location of Voltage Drop Calculations[1]	Sheet Number for Voltage Drop Calculations in Construction Documents	Field Inspector	
							Pass	Fail
NEW MAIN SWITCHBOARD "MSB"	☒	Voltage drop less than 5%	☐	Permitted by CA Elec Code (Exception to 130.5(c))*	In construction documents	E501	☐	☐

** NOTES: If "Permitted by CA Elec Code *" is selected under Compliance Method above, please indicate where the exception applies in the space provided below.*

[1] FOOTNOTES: Voltage drop calculations may be attached to the permit application outside the construction documents if allowed by the Authority Having Jurisdiction. Select "attached" if applicable. If calculations will be the responsibility of the installing contractor, select "Contractor Responsible".

I. CIRCUIT CONTROLS FOR 120-VOLT RECEPTACLES AND CONTROLLED RECEPTACLES

This table includes entirely new or complete replacement electrical power distribution systems to demonstrate compliance with 130.5(d)/ 160.6(d).. Both controlled and uncontrolled receptacles must be provided in office areas, lobbies, conference rooms, kitchen areas in office spaces, copy rooms and hotel/motel guest rooms.

STATE OF CALIFORNIA

Electrical Power Distribution

CALIFORNIA ENERGY COMMISSION

CERTIFICATE OF COMPLIANCE			NRCC-ELC-E
Project Name: PORTERVILLE COMMUNITY CENTER		**Report Page:**	**(Page 5 of 6)**
		Date Prepared:	2023-12-19T15:51:49-05:00

I. CIRCUIT CONTROLS FOR 120-VOLT RECEPTACLES AND CONTROLLED RECEPTACLES

01	02	03	04	05	06	07	
Room name or Description	Location/ Type of Controlled Receptacles[1]	Shut-Off Controls	Demand Responsive Controls	Permanent Durable Marking Will be Used	Location of Requirements in Construction Documents	Field Inspector	
						Pass	Fail
LOBBY	Within 6ft of uncontrolled receptacle	Occupancy Sensor	Included w capabilities per 110.12(e)	☒	E201	☐	☐
OFFICE, OPEN OFFICE, MGR. OFFICE	Within 6ft of uncontrolled receptacle	Occupancy Sensor	Included w capabilities per 110.12(e)	☒	E201	☐	☐

** NOTES: If "Other*" is selected under Shut-Off Controls above, please indicate how compliance has been achieved in the space provided below.*

[1] FOOTNOTES: Receptacles dedicated to refrigerators and water dispensers in kitchens, located a minimum of 6ft above the floor specifically for clocks, network copiers, fax machines, A/V and data equipment other than personal computers in copy rooms, circuits rated more than 20 Amps, or connected to a UPS that are intended to be in continuous use and are marked to differentiate them from other receptacles or circuits are excepted from the requirements. .

K. DECLARATION OF REQUIRED CERTIFICATES OF INSTALLATION

Selections have been made based on information provided in this document. If any selection have been changed by permit applicant, an explanation should be included in Table E. Additional Remarks. These documents must be provided to the building inspector during construction and can be found online

Form/Title
NRCI-ELC-E - Must be submitted for all buildings

L. DECLARATION OF REQUIRED CERTIFICATES OF ACCEPTANCE

There are no forms required for this project.

STATE OF CALIFORNIA

Electrical Power Distribution

CALIFORNIA ENERGY COMMISSION

CERTIFICATE OF COMPLIANCE			NRCC-ELC-E
Project Name: PORTERVILLE COMMUNITY CENTER		**Report Page:**	**(Page 6 of 6)**
Project Address: HENDERSON AVE		**Date Prepared:**	2023-12-19T15:51:49-05:00

DOCUMENTATION AUTHOR'S DECLARATION STATEMENT

I certify that this Certificate of Compliance documentation is accurate and complete.

Documentation Author Name: Jeff Jackson	Documentation Author Signature:
Company: Rose Sing Eastham & Associates	Signature Date: 23-12-19
Address: 131 S DUNWORTH	CEA/ HERS Certification Identification (if applicable):
City/State/Zip: VISALIA, CA 93292	Phone: 559-733-2671 EXT. 104

RESPONSIBLE PERSON'S DECLARATION STATEMENT

I certify the following under penalty of perjury, under the laws of the State of California:

1. The information provided on this Certificate of Compliance is true and correct.
2. I am eligible under Division 3 of the Business and Professions Code to accept responsibility for the building design or system design identified on this Certificate of Compliance (responsible designer)
3. The energy features and performance specifications, materials, components, and manufactured devices for the building design or system design identified on this Certificate of Compliance conform to the requirements of Title 24, Part 1 and Part 6 of the California Code of Regulations.
4. The building design features or system design features identified on this Certificate of Compliance are consistent with the information provided on other applicable compliance documents, worksheets, calculations, plans and specifications submitted to the enforcement agency for approval with this building permit application.
5. I will ensure that a completed signed copy of this Certificate of Compliance shall be made available with the building permit(s) issued for the building, and made available to the enforcement agency for all applicable inspections. I understand that a completed signed copy of this Certificate of Compliance is required to be included with the documentation the builder provides to the building owner at occupancy.

Responsible Designer Name: Steven Eastham	Responsible Designer Signature:
Company: Rose Sing Eastham	Date Signed: 23-12-19
Address: 131 S DUNWORTH	License: E-18786
City/State/Zip: VISALIA, CA 93292	Phone: 559-733-2671 EXT. 101

Rose Sing Eastham & Associates
Electrical Consultants
131 S. Dunworth – (559)733–2671
Visalia, California 93292–6705

REGISTERED PROFESSIONAL ENGINEER
STEVEN KIRK EASTHAM
No. E-18786
Exp. 6/30/25
ELECTRICAL
STATE OF CALIFORNIA

rrm design group
rrmdesign.com | (805) 543-1794
3765 SOUTH HIGUERA STREET, SUITE 102
SAN LUIS OBISPO, CA 93401

THE INCLUDED DRAWINGS, SPECIFICATIONS, IDEAS, DESIGNS AND ARRANGEMENTS REPRESENTED THEREBY ARE AND SHALL REMAIN THE PROPERTY OF RRM DESIGN GROUP AND NO PART THEREOF SHALL BE COPIED, DISCLOSED TO OTHERS OR USED IN CONNECTION WITH ANY WORK OR PROJECT OTHER THAN THE SPECIFIED PROJECT FOR WHICH THEY HAVE BEEN PREPARED AND DEVELOPED WITHOUT THE WRITTEN CONSENT OF RRM DESIGN GROUP. VISUAL CONTACT WITH THESE DRAWINGS OR SPECIFICATIONS SHALL CONSTITUTE CONCLUSIVE EVIDENCE OF ACCEPTANCE OF THESE RESTRICTIONS. SUBMITTAL OF THESE DOCUMENTS FOR PUBLIC AGENCY REVIEW SHALL NOT BE CONSIDERED A WAIVER OF RRM DESIGN GROUP'S RIGHTS.
RRM DESIGN GROUP COPYRIGHT 2023
RRM IS A CALIFORNIA CORPORATION

CONSULTANT

AGENCY

100% CD SET
NOT FOR CONSTRUCTION

FOURTH ST COMMUNITY CENTER AND PARK

HENDERSON AVE., PORTERVILLE, CA 93257

POWER COMPLIANCE

NO.	REVISION	DATE
1	PLAN CHECK REVISION 1	5/17/24
2	PLAN CHECK REVISION 2	9/12/24

PLAN CHECK REVISION 2

PROJECT MANAGER JJ
DRAWN BY CM **CHECKED BY** JJ
DATE 2024.01.15
PROJECT NUMBER 2883-01-RC22
SHEET EG104

Z:\Drafting\Jobs\RSE\City of Porterville\Fourth Street Community Center & Park\EG104.dwg DATE SAVED: 12/19/23 BY: Casey DATE PLOTTED: 09/19/24 JOB #: 22-173-JJ

STATE OF CALIFORNIA

Solar And Battery

CALIFORNIA ENERGY COMMISSION

CERTIFICATE OF COMPLIANCE	**NRCC-SAB-E**

This document is used to demonstrate compliance with prescriptive PV and battery requirements in 140.10/ 170.2 for nonresidential, multifamily and mixed-use buildings and prescriptive solar thermal requirements in 170.2(d)3C for multifamily and hotel/ motel occupancies. When PV/battery/solar thermal requirements don't apply or are traded using the performance approach, this document demonstrates compliance with mandatory solar readiness requirements in 110.10/ 160.8 for newly constructed buildings which are either multifamily ten stories or fewer, hotel/motel ten stories or fewer or all other nonresidential buildings three stories or fewer. It is also used to demonstrate compliance with solar readiness in 110.10/ 160.8 for additions to nonresidential, multifamily or hotel/motel building types which add more than 2,000 ft² of roof area. Alterations, or additions of less than 2,000 ft² of roof area, are not required to comply with solar readiness, solar PV and battery requirements and do not need to complete this document.

Project Name:	PORTERVILLE COMMUNITY CENTER	**Report Page:**	**(Page 1 of 6)**
Project Address: HENDERSON AVE		**Date Prepared:**	2024-06-07T08:28:53-04:00

A. GENERAL INFORMATION

01	Project Location (city)	PORTERVILLE	04	Building Occupancies	All Other OccupanciesGymnasiumOffice
02	Climate Zone	13	05	Construction Type	New construction
03	Conditioned Floor Area (ft²)	15549 (1)	06	Number of Stories	Bldg <= 3 stories

B. PROJECT SCOPE

The compliance path the project is using to comply per 110.10(b)1B/ 140.10/ 170.2(g and h) is indicated below.

Compliance with Solar Photovoltaic (PV) and Battery Requirements in 140.10/ 170.2(g and h)

	01	
☒	Provided PV system and battery storage sized per 140.10/ 170.2 (g and h)	The project has included an installed PV system and battery storage system per requirements in 140.10/ 170.2(g and h) as documented in Table J.
☐	Exception to PV and Battery: Not enough Solar Access Roof Area	The total of all available Solar Access Roof Area(s) of the project site is less than three percent of the conditioned floor area as documented in Table J.
☐	Exception to PV and Battery: Required PV < 4kW	The required PV system size is less than 4 kW dc as documented in Table J..
☐	Exception to PV and Battery: No contiguous Solar Access Roof Area	The Solar Access Roof Area(s) of the project site contains less than 80 contiguous square feet as documented in Table J.
☐	Exception to PV and Battery: Can't meet snow load	The project has a roof design where the enforcement authority has verified it is not possible for the PV system, including panels, modules, components, supports, and attachments to the roof structure, to meet ASCE 7-16 Chapter 7, Snow Loads.
☐	Exception to PV and Battery: Multi-tenant without VNEM or Community Solar	The project is a multi-tenant building in an area where a load serving entity does not provide either a Virtual Net Metering (VNEM) or community solar program.
☐	The prescriptive PV/battery requirement has been traded off using the performance compliance approach as documented on the PRF Certificate of Compliance form.	

STATE OF CALIFORNIA

Solar And Battery

CALIFORNIA ENERGY COMMISSION

CERTIFICATE OF COMPLIANCE			**NRCC-SAB-E**
Project Name: PORTERVILLE COMMUNITY CENTER		**Report Page:**	**(Page 2 of 6)**
		Date Prepared:	2024-06-07T08:28:53-04:00

Compliance with Solar Thermal Water Heating Requirements in 170.2(d)3C (Multifamiily and hotel/ motel occupancies only)

	01
☐	The project includes a hotel/motel or multifamily occupancy with a gas or propane central water-heating system (serves 2+ dwelling units) and includes a permanently installed domestic solar water-heating system to comply with 170.2(d)3C and Reference Residential Appendix RA4, as documented in Table H. Compliance meets Exception 2 to solar ready requirements in 110.10(b).

C. COMPLIANCE RESULTS

Results in this table are automatically calculated from data input and calculations in Tables F through I. Note: If any cell on this table says "DOES NOT COMPLY" or "COMPLIES with Exceptional Conditions" refer to Table D. for guidance or see the applicable Table referenced below.

Allocated Solar Zone				Installed PV System				Installed SWH System				Smart Tstat and Alternative EE Measure		Compliance Results
01		02		03		04		05		06		07	08	
Required Minimum Area (ft²)	<=	Designated Area (ft²)	OR	Required Minimum DC Power Rating (Watts)	<=	Designed DC Power Rating (Watts)	OR	Required Minimum Solar Savings Fraction	<=	Designed/Rated Solar Savings Fraction	OR	JA5 Compliant Thermostat Specified?	Alternative Energy Efficiency Measure	COMPLIES
(See Table F)				(See Tables G or J)				(See Table H)				(See Table I)		
	<=		OR	6,840	<=	7,470	OR		<=		OR			
			Location in construction documents showing the location for inverters and metering equipment and a pathway for the routing of conduit/ plumbing to the electrical service/ water heating system per §110.10(c).											
Battery storage system design meets the minimum requirements in Joint Appendix JA12 and the minimum energy (kWh)/ power (kW) capacity per Table J.														COMPLIES

D. EXCEPTIONAL CONDITIONS

This table is auto-filled with uneditable comments because of selections made or data entered in tables throughout the form.

Table F indicates a subarea that is not in compliance with the requirements. Please revisit Table F

STATE OF CALIFORNIA

Solar And Battery

CALIFORNIA ENERGY COMMISSION

CERTIFICATE OF COMPLIANCE			**NRCC-SAB-E**
Project Name: PORTERVILLE COMMUNITY CENTER		**Report Page:**	**(Page 3 of 6)**
		Date Prepared:	2024-06-07T08:28:53-04:00

E. ADDITIONAL REMARKS

This table is includes remarks made by the permit applicant to the Authority Having Jurisdiction.

F. ALLOCATED SOLAR ZONE

This section does not apply to this project.

G. PERMANENTLY INSTALLED SOLAR PV FOR SOLAR READY EXCEPTION

This section does not apply to this project.

H. PERMANENTLY INSTALLED SOLAR HOT WATER SYSTEMS

This section does not apply to this project.

I. SMART THERMOSTATS AND ALTERNATIVE EFFICIENCY MEASURE FOR SOLAR READY EXCEPTION

This section does not apply to this project.

STATE OF CALIFORNIA

Solar And Battery

CALIFORNIA ENERGY COMMISSION

CERTIFICATE OF COMPLIANCE			**NRCC-SAB-E**
Project Name: PORTERVILLE COMMUNITY CENTER		**Report Page:**	**(Page 4 of 6)**
		Date Prepared:	2024-06-07T08:28:53-04:00

J. PHOTOVOLTAIC (PV) AND BATTERY SYSTEMS

This table documents compliance with prescriptive photovoltaic and battery system requirements in 140.10/ 170.2(g and h). Unless the project meets one of the listed exceptions, or trades-off PV in an energy model using performance path, 140.10/ 170.2(g and h) requires installed photovoltaic and battery systems for newly constructed buildings. The installed PV systems must meet the minimum requirements in Joint Appendix 11.

Photovoltaic (PV) System

01	02	03	04	05	06	07	08
Occupancy	Conditioned Floor Area (ft²)	Area of New Roof[1] (ft²) (1)	Roof Area < 70% Solar Access[2] (ft²)	Plansheet or Document showing Solar Access Calculations	Occupied Roof Area[3] (ft²)	Solar Access Roof Area (SARA) (ft²)	Min Size of PV System Required (kWdc)
Auditorium	15,549	15,549	0	EG101	100	15,449	6.84
Total Min Size PV System Required for all Spaces (kWdc):							6.84
Total Size PV System in Design (kWdc):							7.47

[1]FOOTNOTES: Includes the area of the building's roof space capable of structurally supporting a PV system and the area of all roof space on covered parking areas, carports, and all other newly constructed structures on the site that are compatible with supporting a PV system per Title 24, Part 2 Section 1511.2.
[2]Solar access must be determined using CEC approved solar access calculation tools found at https://www.energy.ca.gov/programs-and-topics/programs/building-energy-efficiency-standards/solar-assessment-tools.
[3]As specified by CBC Section 503.1.4.

Battery Storage System

01	02	03	04	05
Space Type	Min Size of PV Applicable To Battery Sizing (kWdc)	Rated Single Charge-Discharge AC Efficiency of Battery System[1]	Min Battery Rated Energy Capacity Required (kWh)	Min Power Capacity of Battery Required (kWdc)
Auditorium	6.84	0.95	6.52	1.57
Total Min Energy (kWh) and Power (kW) Capacity Required			6.53	1.57
Total Energy (kWh) and Power (kW) Capacity in Design			20	7.5

[1]FOOTNOTE: Rated single charge-discharge cycle AC to AC (round trip) efficiency of the battery storage system

STATE OF CALIFORNIA

Solar And Battery

CALIFORNIA ENERGY COMMISSION

CERTIFICATE OF COMPLIANCE			**NRCC-SAB-E**
Project Name: PORTERVILLE COMMUNITY CENTER		**Report Page:**	**(Page 5 of 6)**
		Date Prepared:	2024-06-07T08:28:53-04:00

K. DECLARATION OF REQUIRED CERTIFICATES OF INSTALLATION

Selections have been made based on information provided in this document. If any selections have been changed by the permit applicant, an explanation should be included Table E. Additional Remarks and ExceptionalConditionMessageCCSABE += UserChangedSelectionInCI. These documents must be provided to the building inspector during construction and can be found online

Form/Title
NRCI-SAB-01-E - Must be submitted for all buildings that must comply with solar readiness or PV/Battery requirements.

L. DECLARATION OF REQUIRED CERTIFICATES OF ACCEPTANCE

There are no forms required for this project.

STATE OF CALIFORNIA

Solar And Battery

CALIFORNIA ENERGY COMMISSION

CERTIFICATE OF COMPLIANCE			**NRCC-SAB-E**
Project Name: PORTERVILLE COMMUNITY CENTER		**Report Page:**	**(Page 6 of 6)**
Project Address: HENDERSON AVE		**Date Prepared:**	2024-06-07T08:28:53-04:00

DOCUMENTATION AUTHOR'S DECLARATION STATEMENT

I certify that this Certificate of Compliance documentation is accurate and complete.

Documentation Author Name: Jeff Jackson	Documentation Author Signature:
Company: Rose Sing Eastham & Associates	Signature Date: 23-12-19
Address: 131 S DUNWORTH	CEA/ HERS Certification Identification (if applicable):
City/State/Zip: VISALIA, CA 93292	Phone: 559-733-2671 EXT. 104

RESPONSIBLE PERSON'S DECLARATION STATEMENT

I certify the following under penalty of perjury, under the laws of the State of California:

1. The information provided on this Certificate of Compliance is true and correct.
2. I am eligible under Division 3 of the Business and Professions Code to accept responsibility for the building design or system design identified on this Certificate of Compliance (responsible designer)
3. The energy features and performance specifications, materials, components, and manufactured devices for the building design or system design identified on this Certificate of Compliance conform to the requirements of Title 24, Part 1 and Part 6 of the California Code of Regulations.
4. The building design features or system design features identified on this Certificate of Compliance are consistent with the information provided on other applicable compliance documents, worksheets, calculations, plans and specifications submitted to the enforcement agency for approval with this building permit application.
5. I will ensure that a completed signed copy of this Certificate of Compliance shall be made available with the building permit(s) issued for the building, and made available to the enforcement agency for all applicable inspections. I understand that a completed signed copy of this Certificate of Compliance is required to be included with the documentation the builder provides to the building owner at occupancy.

Responsible Designer Name: Steven Eastham	Responsible Designer Signature:
Company: Rose Sing Eastham	Date Signed: 23-12-19
Address: 131 S DUNWORTH	License: E-18786
City/State/Zip: VISALIA, CA 93292	Phone: 559-733-2671 EXT. 101

rrm design group
rrmdesign.com | (805) 543-1794
3765 SOUTH HIGUERA STREET, SUITE 102
SAN LUIS OBISPO, CA 93401

THE INCLUDED DRAWINGS, SPECIFICATIONS, IDEAS, DESIGNS AND ARRANGEMENTS REPRESENTED THEREBY ARE AND SHALL REMAIN THE PROPERTY OF RRM DESIGN GROUP AND NO PART THEREOF SHALL BE COPIED, DISCLOSED TO OTHERS OR USED IN CONNECTION WITH ANY WORK OR PROJECT OTHER THAN THE SPECIFIED PROJECT FOR WHICH THEY HAVE BEEN PREPARED AND DEVELOPED WITHOUT THE WRITTEN CONSENT OF RRM DESIGN GROUP. VISUAL CONTACT WITH THESE DRAWINGS OR SPECIFICATIONS SHALL CONSTITUTE CONCLUSIVE EVIDENCE OF ACCEPTANCE OF THESE RESTRICTIONS. SUBMITTAL OF THESE DOCUMENTS FOR PUBLIC AGENCY REVIEW SHALL NOT BE CONSIDERED A WAIVER OF RRM DESIGN GROUP'S RIGHTS.
RRM DESIGN GROUP COPYRIGHT 2023
RRM IS A CALIFORNIA CORPORATION

CONSULTANT

AGENCY

100% CD SET
NOT FOR CONSTRUCTION

FOURTH ST COMMUNITY CENTER AND PARK
HENDERSON AVE., PORTERVILLE, CA 93257

SOLAR AND BATTERY COMPLIANCE

NO.	REVISION	DATE
1	PLAN CHECK REVISION 1	5/17/24
2	PLAN CHECK REVISION 2	9/12/24

PLAN CHECK REVISION 2

PROJECT MANAGER JJ	
DRAWN BY CM	**CHECKED BY** JJ
DATE 2024.01.15	
PROJECT NUMBER 2883-01-RC22	
SHEET EG105	

Rose Sing Eastham & Associates
Electrical Consultants
131 S. Dunworth – (559)733–2671
Visalia, California 93292–6705

REGISTERED PROFESSIONAL ENGINEER
STEVEN KIRK EASTHAM
No. E-18786
Exp. 6/30/25
ELECTRICAL
STATE OF CALIFORNIA

Z:\Drafting\Jobs\RSE\City of Porterville\Fourth Street Community Center & Park\EG105.dwg DATE SAVED: 06/07/24 BY: Casey DATE PLOTTED: 09/19/24 JOB #: 22-173-JJ

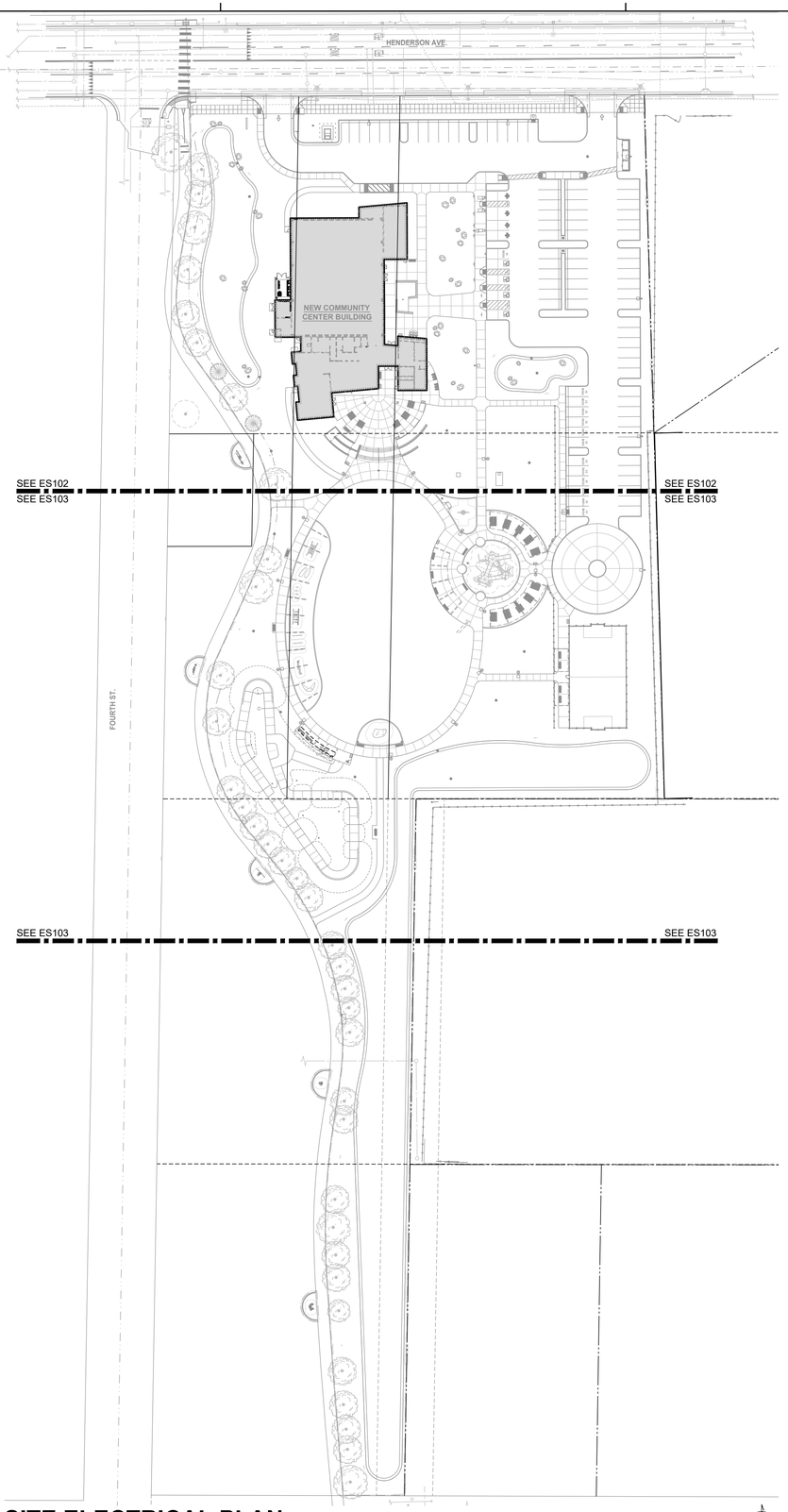

1 A-415 **OVERALL SITE ELECTRICAL PLAN**
SCALE: 1" = 60'-0"

rrm design group
rrmdesign.com | (805) 543-1794
3765 SOUTH HIGUERA STREET, SUITE 102
SAN LUIS OBISPO, CA 93401

THE INCLUDED DRAWINGS, SPECIFICATIONS, IDEAS, DESIGNS AND ARRANGEMENTS REPRESENTED THEREBY ARE AND SHALL REMAIN THE PROPERTY OF RRM DESIGN GROUP AND NO PART THEREOF SHALL BE COPIED, DISCLOSED TO OTHERS OR USED IN CONNECTION WITH ANY WORK OR PROJECT OTHER THAN THE SPECIFIED PROJECT FOR WHICH THEY HAVE BEEN PREPARED AND DEVELOPED WITHOUT THE WRITTEN CONSENT OF RRM DESIGN GROUP. VISUAL CONTACT WITH THESE DRAWINGS OR SPECIFICATIONS SHALL CONSTITUTE DISCLOSURE EVIDENCE OF ACCEPTANCE OF THESE RESTRICTIONS. SUBMITTAL OF THESE DOCUMENTS FOR PUBLIC AGENCY REVIEW SHALL NOT BE CONSIDERED A WAIVER OF RRM DESIGN GROUP'S RIGHTS.
RRM DESIGN GROUP COPYRIGHT 2023
RRM IS A CALIFORNIA CORPORATION

CONSULTANT

AGENCY

100% CD SET
NOT FOR CONSTRUCTION

FOURTH ST COMMUNITY CENTER AND PARK
HENDERSON AVE., PORTERVILLE, CA 93257

OVERALL SITE ELECTRICAL PLAN

NO.	REVISION	DATE
1	PLAN CHECK REVISION 1	5/17/24
2	PLAN CHECK REVISION 2	9/12/24

PLAN CHECK REVISION 2

PROJECT MANAGER: JJ
DRAWN BY: CM
CHECKED BY: JJ
DATE: 2024.01.15
PROJECT NUMBER: 2883-01-RC22
SHEET: ES101

REGISTERED PROFESSIONAL ENGINEER
KEVIN KIRK EASTHAM
No. E-15786
Exp. 6/30/25
ELECTRICAL
STATE OF CALIFORNIA

Rose Sing Eastham & Associates
Electrical Consultants
131 S. Dunworth – (559)733-2671
Visalia, California 93292-6705

Z:\Drafting\Jobs\RSE\City of Porterville\Fourth Street Community Center & Park\ES101.dwg DATE SAVED: 01/09/24 BY: Casey DATE PLOTTED: 09/19/24 JOB #: 22-173-JJ

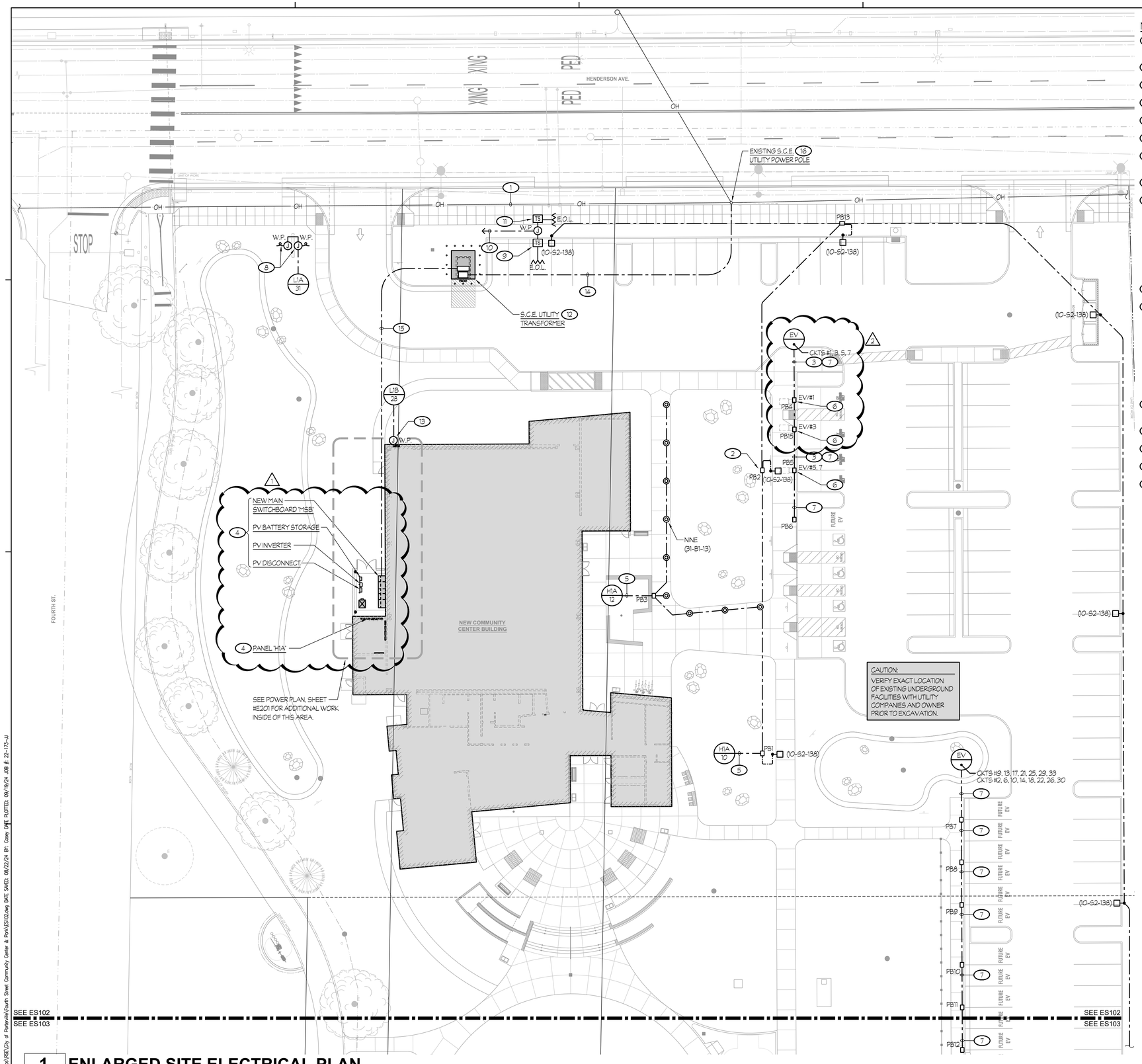

NOTES (THIS SHEET ONLY):

1. ——OH—— DENOTES EXISTING 'OVERHEAD' UTILITY LINES. TYPICAL, U.O.N..
2. PULL BOX PER DETAILS #3/ES03 AND #4/ES03. TYPICAL, U.O.N..
3. FEEDER PER ONE LINE DIAGRAM, #1/ES01.
4. SEE POWER PLAN, SHEET #E201 FOR EXACT LOCATION AND REQUIREMENTS.
5. ROUTE CIRCUIT THROUGH LIGHTING CONTROL PANEL 'LCP'.
6. CONNECT E.V. CHARGING STATIONS.
7. SPARE CONDUITS FOR FUTURE E.V. CHARGING STATIONS PER ONE LINE DIAGRAM, #1/ES01.
8. CONNECT INTERNALLY LIT SIGN LIGHT. COORDINATE REQUIREMENTS WITH SUPPLIER.
9. CONNECT TAMPER SWITCH AT THE POST INDICATOR VALVE "P.I.V.". RUN 1/2" LIQUIDTIGHT FLEXIBLE METALLIC CONDUIT WITH 2 #14 INSIDE TO TAMPER SWITCH AND PROVIDE AN END-OF-LINE RESISTOR "E.O.L.". SECURE CONDUIT TO PIPING WITH 1/2" WIDE STAINLESS STEEL STRAPPING. PROVIDE A TWO-DEVICE DIECAST WEATHERPROOF JUNCTION BOX WITH A BLANK GASKETED COVER AND MOUNT AT +6" A.F.G.. PROVIDE AN ADDITIONAL GALVANIZED RIGID STEEL CONDUIT, MINIMUM OF 24" LONG, WRAPPED WITH PVC TAPE TO SUPPORT WEATHERPROOF JUNCTION BOX.
   COORDINATE EXACT LOCATION WITH FIRE SPRINKLER CONTRACTOR PRIOR TO ROUGH-IN.
10. RUN 3/4"C - 4 #14 TO DUAL MONITOR MODULES "1-3a" AND "1-3b" ROOM #116.
11. CONNECT TAMPER SWITCHES AT THE O.S.&Y. VALVES LOCATED ON THE DOUBLE CHECK DETECTOR/BACKFLOW PREVENTER ASSEMBLY. RUN 1/2" LIQUIDTIGHT FLEXIBLE METALLIC CONDUIT WITH 2 #14 INSIDE TO EACH TAMPER SWITCH AND PROVIDE AN END-OF-LINE RESISTOR "E.O.L." AT EACH TAMPER SWITCH. SECURE CONDUIT TO PIPING WITH 1/2" WIDE STAINLESS STEEL STRAPPING. PROVIDE A TWO-DEVICE DIECAST WEATHERPROOF JUNCTION BOX WITH A BLANK GASKETED COVER AND MOUNT AT +6" A.F.G.. PROVIDE AN ADDITIONAL GALVANIZED RIGID STEEL CONDUIT, MINIMUM OF 24" LONG, WRAPPED WITH PVC TAPE TO SUPPORT WEATHERPROOF JUNCTION BOX. COORDINATE EXACT LOCATION WITH FIRE SPRINKLER CONTRACTOR PRIOR TO ROUGH-IN.
12. PROVIDE A 10' x 12 CONCRETE TRANSFORMER PAD, GROUNDING AND BARRIER POSTS PER S.C.E. REQUIREMENTS.
13. CONNECT IRRIGATION CONTROLLER, 120V.
14. ONE 5"C (S.C.E. 'PRIMARY') PER S.C.E. REQUIREMENTS.
15. ONE 4"C (S.C.E. 'SECONDARY') PER S.C.E. REQUIREMENTS.
16. EXISTING S.C.E. POWER POLE. VERIFY EXACT LOCATION AND RISER QUADRANT WITH S.C.E. PRIOR TO ROUGH-IN.

1 ENLARGED SITE ELECTRICAL PLAN

A-415 SCALE: 1" = 20'-0"

rrm design group
rrmdesign.com | (805) 543-1794
3765 SOUTH HIGUERA STREET, SUITE 102
SAN LUIS OBISPO, CA 93401

THE INCLUDED DRAWINGS, SPECIFICATIONS, IDEAS, DESIGNS AND ARRANGEMENTS REPRESENTED THEREBY ARE AND SHALL REMAIN THE PROPERTY OF RRM DESIGN GROUP AND NO PART THEREOF SHALL BE COPIED, DISCLOSED TO OTHERS OR SUBSTANTIALLY UTILIZED FOR ANY PURPOSE WHATSOEVER EXCEPT FOR THE PROJECT FOR WHICH THEY HAVE BEEN PREPARED AND DEVELOPED, WITHOUT THE WRITTEN CONSENT OF RRM DESIGN GROUP. VISUAL CONTACT WITH THESE DRAWINGS OR SPECIFICATIONS SHALL CONSTITUTE DISCLAIMER EVIDENCE OF ACCEPTANCE OF THESE RESTRICTIONS. THE SALE OF ANY PRINTED OR ELECTRONIC DRAWINGS SHALL NOT BE CONSIDERED A WAIVER OF RRM DESIGN GROUP'S RIGHTS.
RRM DESIGN GROUP COPYRIGHT 2023
RRM IS A CALIFORNIA CORPORATION

CONSULTANT

AGENCY

100% CD SET
NOT FOR CONSTRUCTION

FOURTH ST COMMUNITY CENTER AND PARK
HENDERSON AVE., PORTERVILLE, CA 93257

ENLARGED SITE ELECTRICAL PLAN

NO.	REVISION	DATE
1	PLAN CHECK REVISION 1	5/17/24
2	PLAN CHECK REVISION 2	9/12/24

PROJECT MANAGER: JJ	
DRAWN BY: CM	CHECKED BY: JJ
DATE: 2024.01.15	
PROJECT NUMBER: 2883-01-RC22	
SHEET: ES102	

PLAN CHECK REVISION 2

Rose Sing Eastham & Associates
Electrical Consultants
131 S. Dunworth — (559)733-2671
Visalia, California 93292-6705

REGISTERED PROFESSIONAL ENGINEER
ALFRED KIRK EASTHAM
No. 24878
Exp. 6/30/25
ELECTRICAL
STATE OF CALIFORNIA

Z:\Porterville\Jobs\DSE\City of Porterville\Fourth Street Community Center & Park\ES102.dwg DATE SAVED: 09/22/24 BY: Casey DATE PLOTTED: 09/19/24 JOB # 22-173-JJ

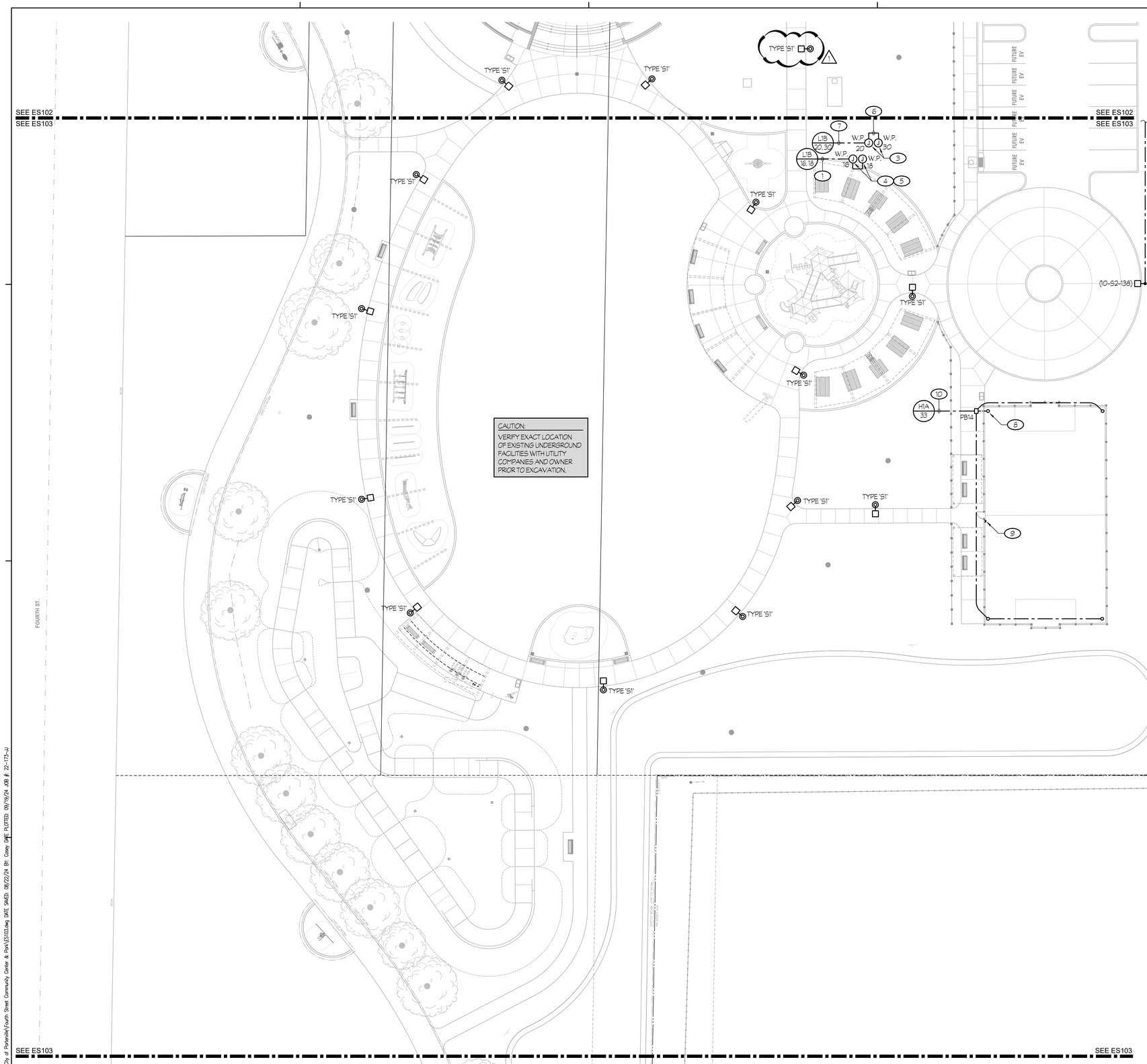

NOTES (THIS SHEET ONLY):

1. 1'C - 3 #6 + 1 #10 GND.
2. ROUTE CIRCUIT THROUGH LIGHTING CONTROL PANEL 'LCP'.
3. CONNECT BOOSTER PUMP, 208V, 1ph.
4. CONTRACTOR TO SPLICE DOWN TO #10 CONDUCTORS FOR FINAL CONNECTIONS.
5. CONNECT SPLASH PAD CONTROLLERS, 120V.
6. 3/4"C - 2 #8 + 1 #10 GND.
7. 1'C - 4 #8 + 1 #10 GND.
8. FIXTURE SUPPLIED WITH MINI PITCH SYSTEM. TYPICAL OF 4.
9. PROVIDE 0-2HR TIMER SWITCH IN NEMA 3R ENCLOSURE. MOUNT ON BACKBOARD ADJACENT TO DOOR OPENING AT +48" A.F.G..
10. ROUTE CIRCUIT THROUGH TIMER AT KEYNOTE #9.

1 ENLARGED SITE ELECTRICAL PLAN

A-415 SCALE: 1" = 20'-0"

0' 10' 20' 40'

Rose Sing Eastham & Associates
Electrical Consultants
131 S. Dunworth – (559)733-2671
Visalia, California 93292-6705

REGISTERED PROFESSIONAL ENGINEER
KEVEN KIRK EASTHAM
No. E-15788
Exp. 6/30/25
ELECTRICAL
STATE OF CALIFORNIA

rrm design group
rrmdesign.com | (805) 543-1794
3765 SOUTH HIGUERA STREET, SUITE 102
SAN LUIS OBISPO, CA 93401

THE INCLUDED DRAWINGS, SPECIFICATIONS, IDEAS, DESIGNS AND ARRANGEMENTS REPRESENTED THEREBY ARE AND SHALL REMAIN THE PROPERTY OF RRM DESIGN GROUP AND NO PART THEREOF SHALL BE COPIED, DISCLOSED TO OTHERS OR USED IN CONNECTION WITH ANY WORK OR PROJECT OTHER THAN THE SPECIFIED PROJECT FOR WHICH THEY HAVE BEEN PREPARED AND DEVELOPED WITHOUT THE WRITTEN CONSENT OF RRM DESIGN GROUP. VISUAL CONTACT WITH THESE DRAWINGS OR SPECIFICATIONS SHALL CONSTITUTE CONCLUSIVE EVIDENCE OF ACCEPTANCE OF THESE RESTRICTIONS. SUBMITTAL OF THESE DOCUMENTS FOR PUBLIC AGENCY REVIEW SHALL NOT BE CONSIDERED A WAIVER OF RRM DESIGN GROUP'S RIGHTS.
RRM DESIGN GROUP COPYRIGHT 2023
RRM IS A CALIFORNIA CORPORATION

CONSULTANT

AGENCY

100% CD SET
NOT FOR CONSTRUCTION

FOURTH ST COMMUNITY CENTER AND PARK
HENDERSON AVE., PORTERVILLE, CA 93257

ENLARGED SITE ELECTRICAL PLAN

NO.	REVISION	DATE
1	PLAN CHECK REVISION 1	5/17/24
2	PLAN CHECK REVISION 2	9/12/24

PROJECT MANAGER: JJ
DRAWN BY: CM
CHECKED BY: JJ
DATE: 2024.01.15
PROJECT NUMBER: 2883-01-RC22
SHEET: ES103

PLAN CHECK REVISION 2

Z:\Drafting\Jobs\RSE\City of Porterville\Fourth Street Community Center & Park\ES103.dwg DATE SAVED: 08/22/24 BY: Casey DATE PLOTTED: 09/19/24 JOB #: 22-173-JJ

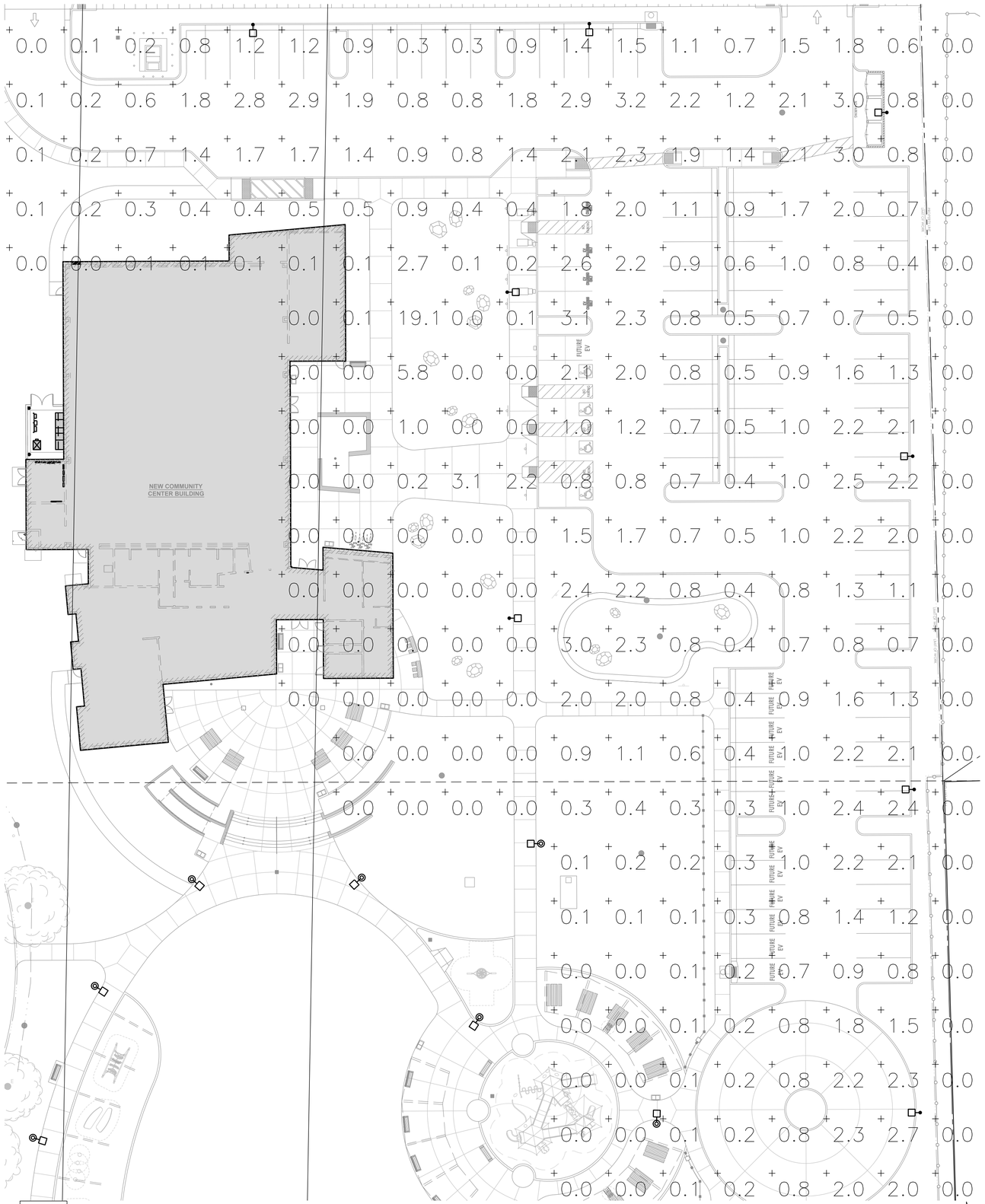

Statistics						
Description	Symbol	Avg	Max	Min	Max/Min	Avg/Min
Calc Zone #2	+	0.6 fc	19.1 fc	0.0 fc	N/A	N/A

1 PHOTOMETRIC SITE LIGHTING PLAN

A-415 SCALE: 1" = 20'-0"

0' 20' 40' 80'

Rose Sing Eastham & Associates
Electrical Consultants
131 S. Dunworth – (559)733-2671
Visalia, California 93292-6705

REGISTERED PROFESSIONAL ENGINEER
KEVIN KIRK EASTHAM
No. E-15786
Exp. 6/30/25
ELECTRICAL
STATE OF CALIFORNIA

rrm design group
rrmdesign.com | (805) 543-1794
3765 SOUTH HIGUERA STREET, SUITE 102
SAN LUIS OBISPO, CA 93401

THE INCLUDED DRAWINGS, SPECIFICATIONS, IDEAS, DESIGNS AND ARRANGEMENTS REPRESENTED THEREBY ARE AND SHALL REMAIN THE PROPERTY OF RRM DESIGN GROUP AND NO PART THEREOF SHALL BE COPIED, DISCLOSED TO OTHERS OR USED IN CONNECTION WITH ANY WORK OR PROJECT OTHER THAN THE SPECIFIED PROJECT FOR WHICH THEY HAVE BEEN PREPARED AND DEVELOPED WITHOUT THE WRITTEN CONSENT OF RRM DESIGN GROUP. VISUAL CONTACT WITH THESE DRAWINGS OR SPECIFICATIONS SHALL CONSTITUTE CONCLUSIVE EVIDENCE OF ACCEPTANCE OF THESE RESTRICTIONS. SUBMITTAL OF THESE DOCUMENTS FOR PUBLIC AGENCY REVIEW SHALL NOT BE CONSIDERED A WAIVER OF RRM DESIGN GROUP'S RIGHTS.
RRM DESIGN GROUP COPYRIGHT 2023
RRM IS A CALIFORNIA CORPORATION

CONSULTANT

AGENCY

100% CD SET
NOT FOR CONSTRUCTION

FOURTH ST COMMUNITY CENTER AND PARK
HENDERSON AVE., PORTERVILLE, CA 93257

PHOTOMETRIC SITE LIGHTING PLAN

NO.	REVISION	DATE
1	PLAN CHECK REVISION 1	5/17/24
2	PLAN CHECK REVISION 2	9/12/24

PROJECT MANAGER: JJ
DRAWN BY: CM
CHECKED BY: JJ
DATE: 2024.01.15
PROJECT NUMBER: 2883-01-RC22
SHEET: ES104 1

PLAN CHECK REVISION 2

Z:\Drafting\Jobs\RSE\City of Porterville\Fourth Street Community Center & Park\ES104.dwg DATE SAVED: 05/20/24 BY: Casey DATE PLOTTED: 09/19/24 JOB #: 22-173-JJ

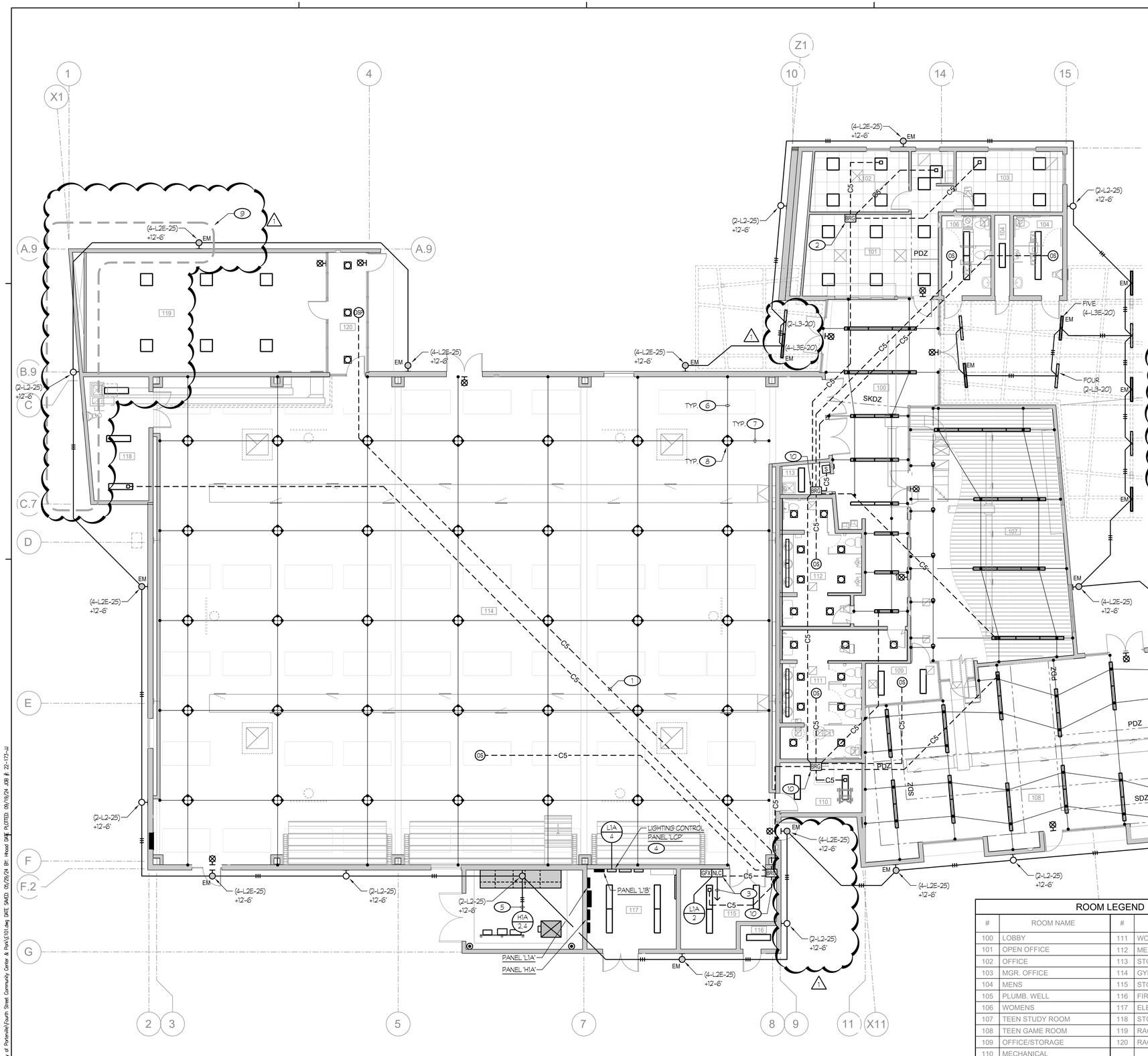

NOTES (THIS SHEET ONLY):

1. — —C5— — DENOTES CAT. 5e CABLE. ELECTRICAL CONTRACTOR MAY USE PRETERMINATED CAT. 5e CABLING OR PROVIDE CAT. 5e CABLING. MODULAR JACKS ON EACH END AND TERMINATE THE MODULAR JACKS USING THE TIA/EIA-568-B.2 PIN-PAIR SPECIFICATION. ELECTRICAL CONTRACTOR SHALL PROVIDE CONDUIT AND OUTLET BOXES IN WALLS FOR ROUTING OF CABLING. CABLE MAY BE ROUTED IN FREE-AIR WHEN LOCATED IN ACCESSIBLE ATTIC SPACE ABOVE T-BAR CEILINGS. AT GYPBOARD CEILINGS, PROVIDE A DOUBLE-GANG LOW VOLTAGE MOUNTING PLATE BRACKET, CADDY #MPLS2 OR EQUAL, AT THE RJ-45 JACKS (EMBEDDED CONTROLS) OF THE SURFACE MOUNTED LIGHT FIXTURES FOR PASSAGE OF CAT. 5e CABLING.
2. TYPICAL OF NETWORK INTERFACE BRIDGE (SYMBOL BRG): LOCATE THE NETWORK INTERFACE BRIDGE IN THE ACCESSIBLE ATTIC SPACE ABOVE THE T-BAR CEILING. SURFACE MOUNT ON THE WALL AT A MINIMUM OF 12' ABOVE THE T-BAR CEILING. RUN 1/2'C - 2 #12 TO NEAREST 'UNSWITCHED' LIGHTING CIRCUIT. RUN CAT. 5e CABLE BETWEEN ADJACENT NETWORK INTERFACE BRIDGES, WHERE APPLICABLE. REFER TO DETAIL #4/E502 FOR ADDITIONAL INFORMATION AND REQUIREMENTS.
3. SURFACE MOUNT THE NETWORK LIGHTING CONTROLLER 'NLC' AT +42" A.F.F.. LOCATE THE GRAPHIC WALLPOD ADJACENT TO THE NETWORK CONTROLLER. RUN 1'C - ONE CAT. 5e PATCH CABLE, LENGTH AS REQUIRED, FROM THE 'NLC' TO THE EXISTING PATCH PANEL IN THE MAIN CROSS-CONNECT LOCATED IN THE ELECTRICAL ROOM. REFER TO DETAIL #7/E502 FOR ADDITIONAL INFORMATION AND REQUIREMENTS.
4. PROVIDE AN nLIGHT LIGHTING RELAY PANEL nLIGHT #ARPINTENC08-SM ENCLOSURE WITH #8FCR-MVOLT-HLK-DTC INTERIORS.
5. ROUTE CIRCUITS THROUGH LIGHTING CONTROL PANEL 'LCP'.
6. PROVIDE SEISMIC RESTRAINT FOR LIGHT FIXTURES PER DETAIL #9/E503, TYPICAL. THE 'HORIZONTAL' CABLE SHALL RUN CONTINUOUS, FROM WALL TO WALL IN THE NORTH/SOUTH DIRECTION, WITH AN ATTACHMENT AT EACH WALL AND AT EACH 'VERTICAL' CABLE.
7. PROVIDE SEISMIC RESTRAINT FOR LIGHT FIXTURES PER DETAIL #3/E506, TYPICAL. THE 'HORIZONTAL' CABLE SHALL RUN CONTINUOUS, FROM WALL TO WALL IN THE EAST/WEST DIRECTION, WITH AN ATTACHMENT AT EACH WALL AND AT EACH 'VERTICAL' CABLE.
8. ATTACHMENT AT EACH VERTICAL SUPPORT CABLE PER DETAIL #3/E506.
9. SEE DETAIL #10/E503 FOR EXTERIOR WALL LIGHT LOCATIONS AND CONNECTION REQUIREMENTS.
10. TYPICAL OF NETWORK INTERFACE BRIDGE (SYMBOL BRG): LOCATE THE NETWORK INTERFACE BRIDGE SURFACE MOUNTED HIGH ON WALL. RUN 1/2'C - 2 #12 TO NEAREST 'UNSWITCHED' LIGHTING CIRCUIT. RUN CAT. 5e CABLE BETWEEN ADJACENT NETWORK INTERFACE BRIDGES, WHERE APPLICABLE. REFER TO DETAIL #4/E502 FOR ADDITIONAL INFORMATION AND REQUIREMENTS.

1

ROOM LEGEND

#	ROOM NAME	#	ROOM NAME
100	LOBBY	111	WOMEN
101	OPEN OFFICE	112	MEN
102	OFFICE	113	STORAGE
103	MGR. OFFICE	114	GYM
104	MENS	115	STORAGE
105	PLUMB. WELL	116	FIRE RISER
106	WOMENS	117	ELECTRICAL
107	TEEN STUDY ROOM	118	STORAGE
108	TEEN GAME ROOM	119	RACQUETBALL COURT
109	OFFICE/STORAGE	120	RACQUETBALL ENTRANCE
110	MECHANICAL		

1 OVERALL LIGHTING PLAN

A-415 SCALE: 1/8" = 1'-0"

0' 4' 8' 16'

Rose Sing Eastham & Associates
Electrical Consultants
131 S. Dunworth – (559)733-2671
Visalia, California 93292-6705

REGISTERED PROFESSIONAL ENGINEER
STEVEN KIRK EASTHAM
No. E18786
Exp. 6/30/25
ELECTRICAL
STATE OF CALIFORNIA

rrm design group
rrmdesign.com | (805) 543-1794
3765 SOUTH HIGUERA STREET, SUITE 102
SAN LUIS OBISPO, CA 93401

THE INCLUDED DRAWINGS, SPECIFICATIONS, IDEAS, DESIGNS AND ARRANGEMENTS REPRESENTED THEREBY ARE AND SHALL REMAIN THE PROPERTY OF RRM DESIGN GROUP AND NO PART THEREOF SHALL BE COPIED, DISCLOSED TO OTHERS OR SUBSTANTIALLY USED WITHOUT THE WRITTEN CONSENT OF RRM DESIGN GROUP, FOR ANY WORK NOT THE PROJECT FOR WHICH THEY HAVE BEEN PREPARED AND DEVELOPED. WITHOUT THE WRITTEN CONSENT OF RRM DESIGN GROUP, VISUAL CONTACT WITH THESE DRAWINGS OR SPECIFICATIONS SHALL CONSTITUTE DISCLAIMER EVIDENCE OF ACCEPTANCE OF THESE RESTRICTIONS. THE SALE OF THE FIRST SET OF THESE DOCUMENTS SHALL NOT BE CONSIDERED A WAIVER OF RRM DESIGN GROUP'S RIGHTS.
RRM DESIGN GROUP COPYRIGHT 2023
RRM IS A CALIFORNIA CORPORATION

CONSULTANT

AGENCY

100% CD SET
NOT FOR CONSTRUCTION

PLAN CHECK REVISION 2

FOURTH ST COMMUNITY CENTER AND PARK
HENDERSON AVE., PORTERVILLE, CA 93257

OVERALL LIGHTING PLAN

NO.	REVISION	DATE
1	PLAN CHECK REVISION 1	5/17/24
2	PLAN CHECK REVISION 2	9/12/24
△		
△		
△		
△		

PROJECT MANAGER: JJ
DRAWN BY: CM
CHECKED BY: JJ
DATE: 2024.01.15
PROJECT NUMBER: 2883-01-RC22
SHEET: E101

Z:\Drafting\Jobs\RSA\City of Porterville\Fourth Street Community Center & Park\E101.dwg DATE SAVED: 05/29/24 BY: Hood DATE PLOTTED: 09/19/24 JOB # 22-173-JJ

NOTES (THIS SHEET ONLY):

1. LOWER CASE LETTER DENOTES RESPECTIVE CONTROL ZONE, TYPICAL.
2. SYMBOL (SHADED LIGHT FIXTURE) DENOTES LIGHT FIXTURE EQUIPPED WITH AN EMERGENCY L.E.D. DRIVER. CONNECT PER DETAIL #3/E502.
3. MOUNT BOTTOM OF FIXTURE AT +15'-0" A.F.F..
4. MOUNT BOTTOM OF FIXTURE AT +10'-0" A.F.F..
5. MOUNT BOTTOM OF FIXTURE AT +8'-9" A.F.F..
6. MOUNT BOTTOM OF FIXTURE AT +9'-0" A.F.F..

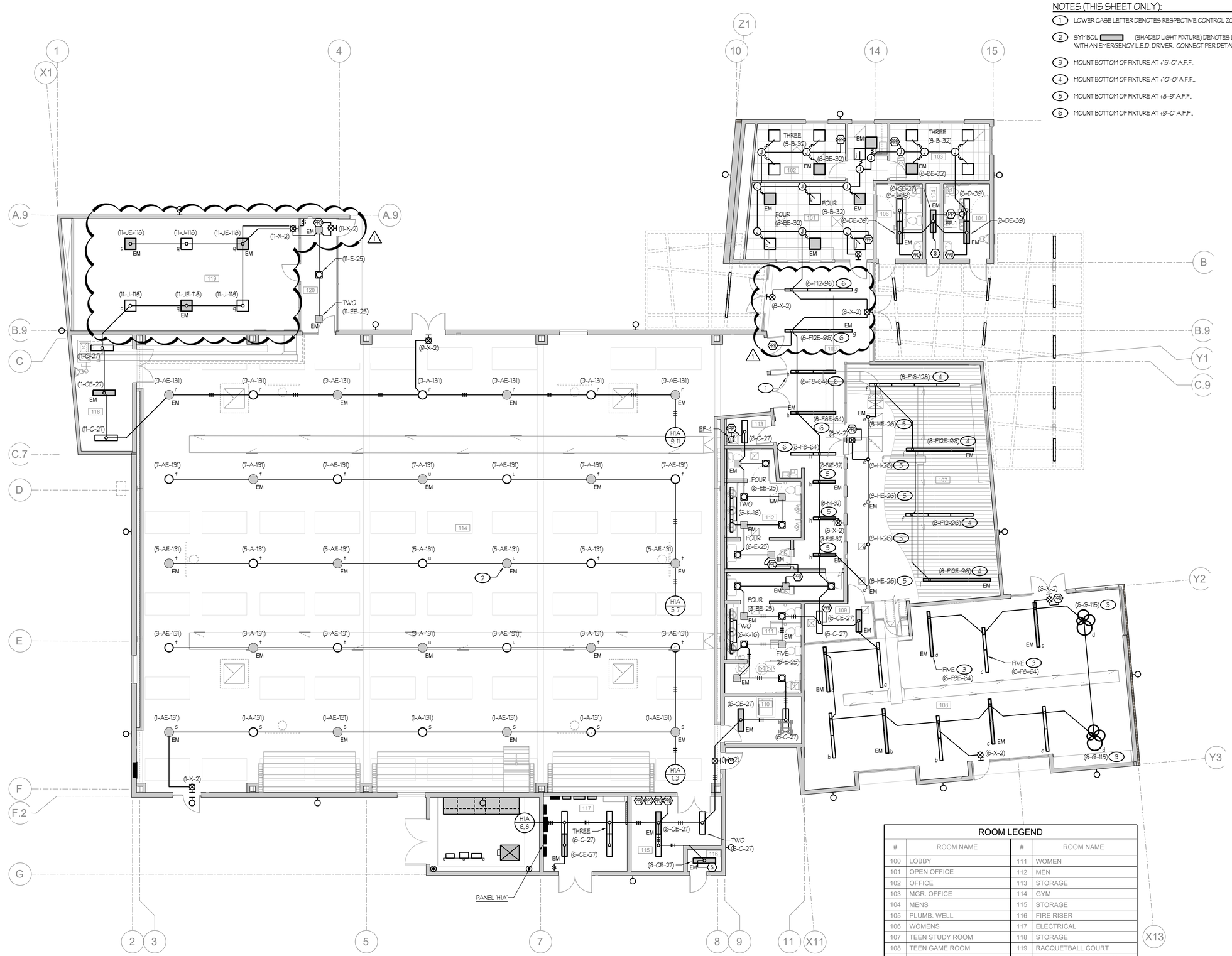

ROOM LEGEND

#	ROOM NAME	#	ROOM NAME
100	LOBBY	111	WOMEN
101	OPEN OFFICE	112	MEN
102	OFFICE	113	STORAGE
103	MGR. OFFICE	114	GYM
104	MENS	115	STORAGE
105	PLUMB. WELL	116	FIRE RISER
106	WOMENS	117	ELECTRICAL
107	TEEN STUDY ROOM	118	STORAGE
108	TEEN GAME ROOM	119	RACQUETBALL COURT
109	OFFICE/STORAGE	120	RACQUETBALL ENTRANCE
110	MECHANICAL		

1 LIGHTING PLAN - POWER

A-415 SCALE: 1/8" = 1'-0"

0' 4' 8' 16'

Rose Sing Eastham & Associates
Electrical Consultants
131 S. Dunworth – (559)733-2671
Visalia, California 93292-6705

REGISTERED PROFESSIONAL ENGINEER
JEFFREY KIRK EASTHAM
No. E14876
Exp. 6/30/25
ELECTRICAL
STATE OF CALIFORNIA

rrm design group
rrmdesign.com | (805) 543-1794
3765 SOUTH HIGUERA STREET, SUITE 102
SAN LUIS OBISPO, CA 93401

THE INCLUDED DRAWINGS, SPECIFICATIONS, IDEAS, DESIGNS AND ARRANGEMENTS REPRESENTED THEREBY ARE AND SHALL REMAIN THE PROPERTY OF RRM DESIGN GROUP AND NO PART THEREOF SHALL BE COPIED, DISCLOSED TO OTHERS OR SUBSTANTIALLY USED FOR ANY PURPOSE WHATSOEVER OTHER THAN THE PROJECT FOR WHICH THEY HAVE BEEN PREPARED AND DEVELOPED, WITHOUT THE WRITTEN CONSENT OF RRM DESIGN GROUP. VISUAL CONTACT WITH THESE DRAWINGS OR SPECIFICATIONS SHALL CONSTITUTE DISCLAIMER EVIDENCE OF ACCEPTANCE OF THESE RESTRICTIONS. THE SALE OF A PRINTED OR REPRODUCED DRAWING SHALL NOT BE CONSIDERED A WAIVER OF RRM DESIGN GROUP'S RIGHTS.
RRM DESIGN GROUP COPYRIGHT 2023
RRM IS A CALIFORNIA CORPORATION

CONSULTANT

AGENCY

100% CD SET
NOT FOR CONSTRUCTION

FOURTH ST COMMUNITY CENTER AND PARK

HENDERSON AVE., PORTERVILLE, CA 93257

LIGHTING PLAN - POWER

NO.	REVISION	DATE
1	PLAN CHECK REVISION 1	5/17/24
2	PLAN CHECK REVISION 2	9/12/24
△		
△		
△		
△		

PROJECT MANAGER: JJ
DRAWN BY: CM
CHECKED BY: JJ
DATE: 2024.01.15
PROJECT NUMBER: 2883-01-RC22
SHEET: E102

PLAN CHECK REVISION 2

Z:\Drafting\Jobs\RSA\City of Porterville\Fourth Street Community Center & Park\E102.dwg DATE SAVED: 05/09/24 BY: Hood DATE PLOTTED: 09/19/24 JOB # 22-173-JJ

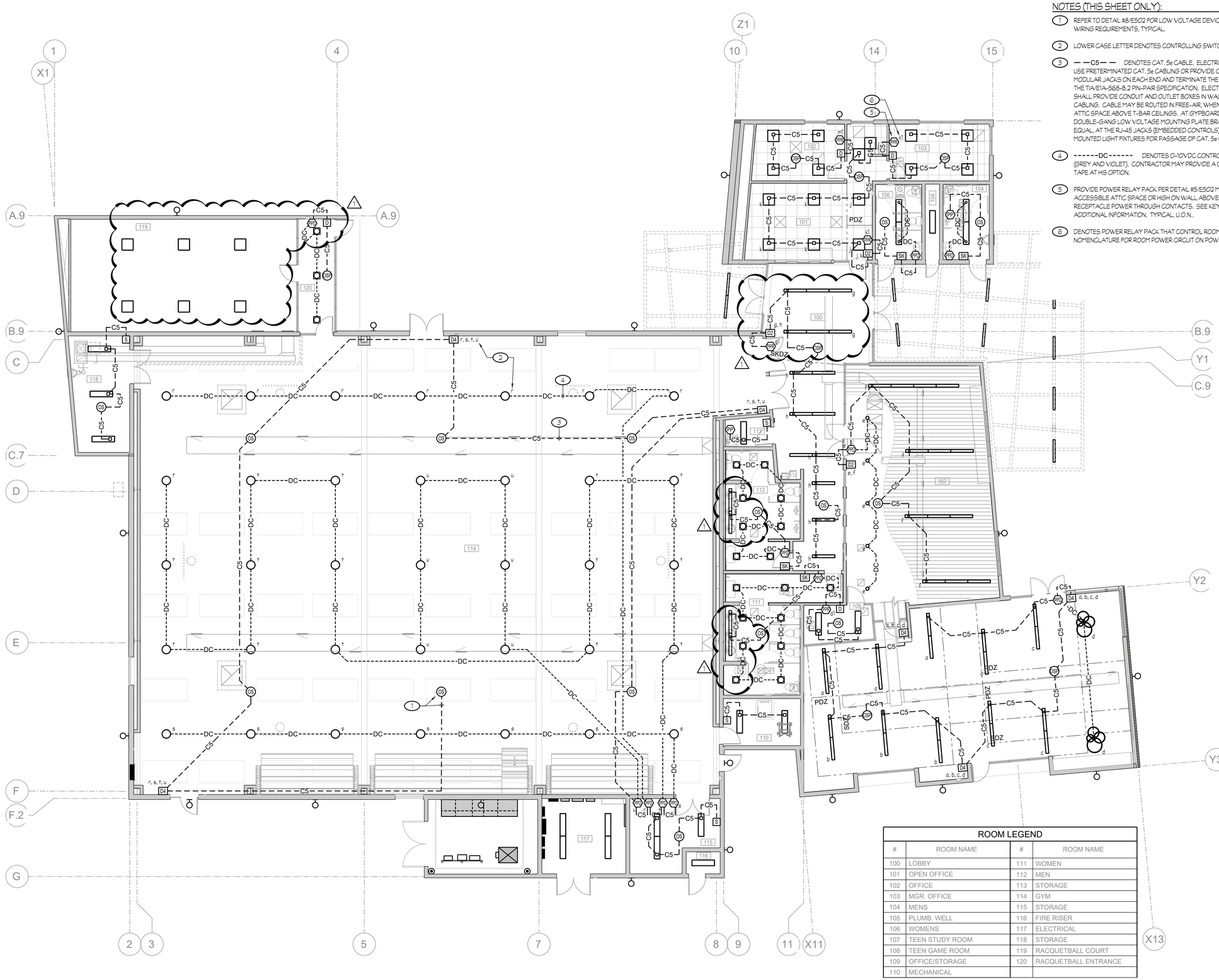

NOTES (THIS SHEET ONLY):

1. REFER TO DETAIL #8/E502 FOR LOW VOLTAGE DEVICES AND LIGHTING CONTROL WIRING REQUIREMENTS, TYPICAL.
2. LOWER CASE LETTER DENOTES CONTROLLING SWITCH, TYPICAL.
3. — —C5— — DENOTES CAT. 5e CABLE. ELECTRICAL CONTRACTOR MAY USE PRETERMINATED CAT. 5e CABLING OR PROVIDE CAT. 5e CABLING, MODULAR JACKS ON EACH END AND TERMINATE THE MODULAR JACKS USING THE TIA/EIA-568-B.2 PIN-PAIR SPECIFICATION. ELECTRICAL CONTRACTOR SHALL PROVIDE CONDUIT AND OUTLET BOXES IN WALLS FOR ROUTING OF CABLING. CABLE MAY BE ROUTED IN FREE-AIR, WHEN LOCATED IN ACCESSIBLE ATTIC SPACE ABOVE T-BAR CEILINGS. AT GYPBOARD CEILINGS, PROVIDE A DOUBLE-GANG LOW VOLTAGE MOUNTING PLATE BRACKET, CADDY #MPLS2 OR EQUAL, AT THE RJ-45 JACKS (EMBEDDED CONTROLS) OF THE SURFACE MOUNTED LIGHT FIXTURES FOR PASSAGE OF CAT. 5e CABLING.
4. ------DC------ DENOTES 0-10VDC CONTROL. PROVIDE 1/2"C - 2 #18 (GREY AND VIOLET). CONTRACTOR MAY PROVIDE A CABLE AND USE COLORED TAPE AT HIS OPTION.
5. PROVIDE POWER RELAY PACK PER DETAIL #5/E502 MOUNT ABOVE T-BAR CEILING IN ACCESSIBLE ATTIC SPACE OR HIGH ON WALL ABOVE LIGHT SWITCH. ROUTE 120V RECEPTACLE POWER THROUGH CONTACTS. SEE KEYNOTE #1 ON SHEET #E201 FOR ADDITIONAL INFORMATION. TYPICAL, U.O.N..
6. DENOTES POWER RELAY PACK THAT CONTROL ROOM DEVICES. SEE CORRESPONDING NOMENCLATURE FOR ROOM POWER CIRCUIT ON POWER PLAN. TYPICAL, U.O.N..

ROOM LEGEND

#	ROOM NAME	#	ROOM NAME
100	LOBBY	111	WOMEN
101	OPEN OFFICE	112	MEN
102	OFFICE	113	STORAGE
103	MGR. OFFICE	114	GYM
104	MENS	115	STORAGE
105	PLUMB. WELL	116	FIRE RISER
106	WOMENS	117	ELECTRICAL
107	TEEN STUDY ROOM	118	STORAGE
108	TEEN GAME ROOM	119	RACQUETBALL COURT
109	OFFICE/STORAGE	120	RACQUETBALL ENTRANCE
110	MECHANICAL		

1 LIGHTING PLAN - CONTROLS

A-415 SCALE: 1/8" = 1'-0"

0' 4' 8' 16'

Rose Sing Eastham & Associates
Electrical Consultants
131 S. Dunworth – (559)733-2671
Visalia, California 93292-6705

REGISTERED PROFESSIONAL ENGINEER
STEVEN KIRK EASTHAM
No. E4878
Exp. 6/30/25
ELECTRICAL
STATE OF CALIFORNIA

rrm design group
rrmdesign.com | (805) 543-1794
3765 SOUTH HIGUERA STREET, SUITE 102
SAN LUIS OBISPO, CA 93401

THE INCLUDED DRAWINGS, SPECIFICATIONS, IDEAS, DESIGNS AND ARRANGEMENTS REPRESENTED THEREBY ARE AND SHALL REMAIN THE PROPERTY OF RRM DESIGN GROUP AND NO PART THEREOF SHALL BE COPIED, DISCLOSED TO OTHERS OR SUBSTANTIALLY UTILIZED FOR ANY PURPOSE WHATSOEVER OTHER THAN THE PROJECT FOR WHICH THEY HAVE BEEN PREPARED AND DEVELOPED, WITHOUT THE WRITTEN CONSENT OF RRM DESIGN GROUP. VISUAL CONTACT WITH THESE DRAWINGS OR SPECIFICATIONS SHALL CONSTITUTE DISCLAIMER EVIDENCE OF ACCEPTANCE OF THESE RESTRICTIONS. SHOULD CONSTRUCTION BEGIN, THIS DOCUMENT SHALL NOT BE SHALL NOT BE CONSIDERED A WAIVER OF RRM DESIGN GROUP'S RIGHTS.
RRM DESIGN GROUP COPYRIGHT 2023
RRM IS A CALIFORNIA CORPORATION

CONSULTANT

AGENCY

100% CD SET
NOT FOR CONSTRUCTION

FOURTH ST COMMUNITY CENTER AND PARK
HENDERSON AVE., PORTERVILLE, CA 93257

LIGHTING PLAN - CONTROLS

NO.	REVISION	DATE
1	PLAN CHECK REVISION 1	5/17/24
2	PLAN CHECK REVISION 2	9/12/24
△		
△		
△		
△		

PROJECT MANAGER: JJ
DRAWN BY: CM
CHECKED BY: JJ
DATE: 2024.01.15
PROJECT NUMBER: 2883-01-RC22
SHEET: E103

PLAN CHECK REVISION 2

Z:\Drafting\Jobs\RSA\City of Porterville\Fourth Street Community Center & Park\E103.dwg DATE SAVED: 05/29/24 By: Hood DATE PLOTTED: 09/19/24 JOB # 22-173-JJ

ROOM LEGEND			
#	ROOM NAME	#	ROOM NAME
100	LOBBY	111	WOMEN
101	OPEN OFFICE	112	MEN
102	OFFICE	113	STORAGE
103	MGR. OFFICE	114	GYM
104	MENS	115	STORAGE
105	PLUMB. WELL	116	FIRE RISER
106	WOMENS	117	ELECTRICAL
107	TEEN STUDY ROOM	118	STORAGE
108	TEEN GAME ROOM	119	RACQUETBALL COURT
109	OFFICE/STORAGE	120	RACQUETBALL ENTRANCE
110	MECHANICAL		

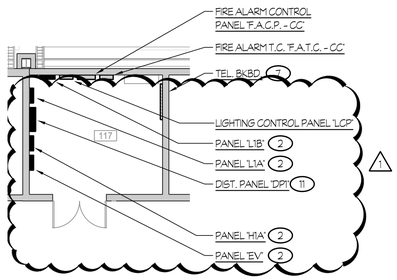

2 PARTIAL POWER PLAN

A-415 SCALE: 1/8" = 1'-0"

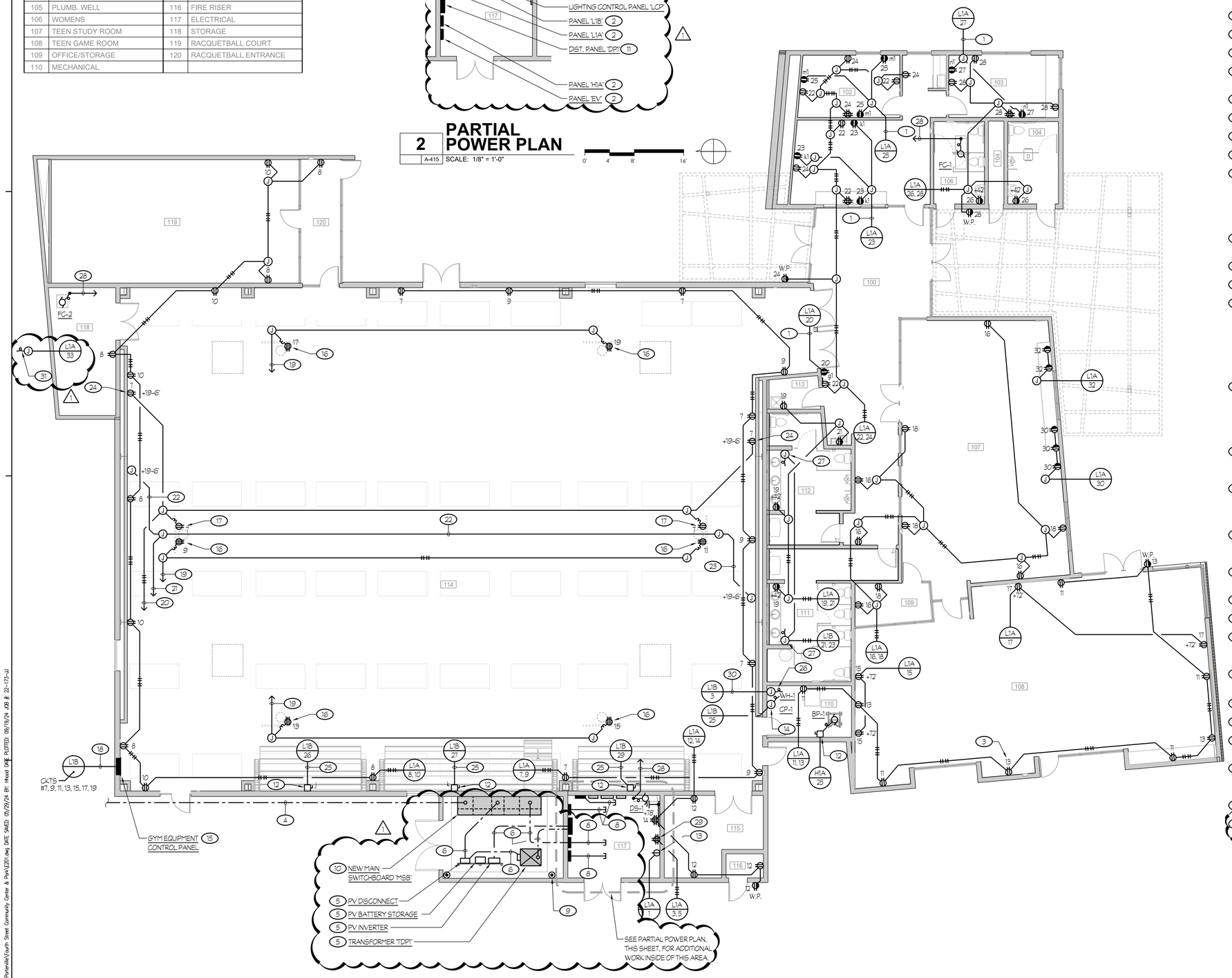

1 OVERALL POWER PLAN

A-415 SCALE: 1/8" = 1'-0"

NOTES (THIS SHEET ONLY):

1. ROUTE CIRCUIT THROUGH RECEPTACLE RELAY PACK. SEE SHEET #E103 FOR POWER RELAY PACK LOCATION.
2. MOUNT PANEL PER DETAIL #1/E503.
3. NUMBER BY DEVICE DENOTES CIRCUIT NUMBER DEVICE IS TO BE CONNECTED ON. TYPICAL, U.O.N..
4. SEE PARTIAL SITE ELECTRICAL PLAN, SHEET #ES102, FOR CONTINUATION.
5. MOUNT PER DETAIL #2/E504.
6. FEEDER PER ONE LINE DIAGRAM, #1/E502.
7. PROVIDE A 4' x 8' x 3/4" THICK PLYWOOD BACKBOARD. RUN A 3/4"C - 1 #CU GND TO GND BUS OF PANEL 'L1A' AND CONNECT.
8. STUB PER SPECIFICATIONS.
9. BONDING AND GROUNDING PER DETAIL #7/E503.
10. MOUNT PER DETAIL #1/E504.
11. MOUNT DISTRIBUTION PANEL PER DETAIL #2/E503.
12. PROVIDE A 30A, 1-POLE NON-FUSED, HEAVY-DUTY SAFETY SWITCH. CONNECT THE PRE-WIRED POWER CABLE SUPPLIED WITH THE MOTORIZED BLEACHER SYSTEM TO THE HEAVY-DUTY SAFETY SWITCH. SURFACE MOUNT AT +48" A.F.F.. VERIFY EXACT 'POINT-OF-CONNECTION', DISCONNECT SIZE AND WIRING REQUIREMENTS WITH EQUIPMENT SUPPLIER PRIOR TO ROUGH-IN.
13. PROVIDE A 30A, 1-POLE RECEPTACLE (NEMA 5-30R) FOR I.D.F. CONNECTIONS.
14. CONNECT CIRCULATION PUMP, 120V.
15. MOUNT PER DETAIL #3/E504.
16. PROVIDE A 4" SQUARE x 2 1/8" DEEP OUTLET BOX WITH SINGLE GANG RAISED RING, DEPTH AS REQUIRED, AND A STAINLESS STEEL WALLPLATE. LOCATE WITHIN 3'-0" OF ELECTRIC WINCH AND INSTALL THE NEMA L14-20R TWIST-LOCK RECEPTACLE SUPPLIED WITH BACKSTOP ELECTRIC WINCH. RUN 3/4" L.F.M.C. - 3 #10 + 1 #10 GND FROM TWIST-LOCK RECEPTACLE TO JUNCTION BOX AT ROOF STRUCTURE ABOVE. VERIFY EXACT LOCATION OF ELECTRIC WINCH AND ALL REQUIREMENTS WITH EQUIPMENT SUPPLIER PRIOR TO ROUGH-IN.
17. PROVIDE A DUPLEX RECEPTACLE FOR SHOT CLOCK. SHOT CLOCK IS EQUIPPED WITH A 15' LG. POWER CORD, SO MOUNT THE DUPLEX RECEPTACLE WITHIN THIS DISTANCE, RUN 1/2" L.F.M.C. - 2 #10 + 1 #10 GND FROM DUPLEX RECEPTACLE TO 'UPSTREAM' JUNCTION BOX AT ROOF STRUCTURE ABOVE. VERIFY EXACT LOCATION AND MOUNTING REQUIREMENTS WITH EQUIPMENT SUPPLIER PRIOR TO ROUGH-IN.
18. 1 1/4"C - 5 #8, 2 #10 + 1 #8 GND; PLUS 1 1/4"C - 5 #8 + 1 #8 GND. REDUCE #8 CONDUCTORS DOWN TO A SMALLER GAUGE CONDUCTOR IF REQUIRED FOR TERMINATION AT THE KEY SWITCH.
19. RUN 1 1/4"C - 6 #8 + 1 #8 GND TO RESPECTIVE KEY SWITCH IN THE BASKETBALL EQUIPMENT CONTROL PANEL. REDUCE #8 CONDUCTORS DOWN TO A SMALLER GAUGE CONDUCTOR IF REQUIRED FOR TERMINATION AT THE KEY SWITCH OR TWIST-LOCK RECEPTACLE.
20. RUN 3/4"C - 3 #12 + 1 #12 GND TO BASKETBALL EQUIPMENT CONTROL PANEL AND CONNECT TO THE RESPECTIVE TOGGLE SWITCHES FOR THE SCOREBOARD AND SHOT CLOCKS.
21. RUN 1"C - PLUS SHOT CLOCK AND SCOREBOARD CONTROL CABLES TO BASKETBALL EQUIPMENT CONTROL PANEL.
22. 1"C - PLUS SHOT CLOCK AND SCOREBOARD CONTROL CABLES.
23. 3/4"C - PLUS SHOT CLOCK CONTROL CABLE.
24. CONNECT SCOREBOARD POWER AND CONTROLS. VERIFY EXACT 'POINT-OF-CONNECTION' AND REQUIREMENTS WITH EQUIPMENT SUPPLIER PRIOR TO ROUGH-IN.
25. ROUTE CIRCUIT THROUGH CONTROL SWITCH AT GYM EQUIPMENT CONTROL PANEL.
26. CONNECT ELECTRIC WATER HEATER, 208V.
27. CONNECT HAND DRYER, 120V.
28. RUN A 1"C TO RESPECTIVE ODU FOR CONTROLS. COORDINATE EXACT REQUIREMENTS WITH MECHANICAL.
29. PROVIDE DEDICATED DOUBLE DUPLEX RECEPTACLE FOR HORIZONTAL CROSS-CONNECT. COORDINATE AND VERIFY EXACT LOCATION WITH DATA SYSTEMS CONTRACTOR PRIOR TO ROUGH-IN.
30. 3/4"C - 2 #8 + 1 #10 GND.
31. CONNECT INTERNALLY LIT SIGN LIGHT. COORDINATE REQUIREMENTS WITH SUPPLIER.

Rose Sing Eastham & Associates
Electrical Consultants
131 S. Dunworth ~ (559)733-2671
Visalia, California 93292-6705

REGISTERED PROFESSIONAL ENGINEER KIRK EASTHAM No. 24876 Exp. 6/30/25 ELECTRICAL STATE OF CALIFORNIA

rrm design group
rrmdesign.com | (805) 543-1794
3765 SOUTH HIGUERA STREET, SUITE 102
SAN LUIS OBISPO, CA 93401

THE INCLUDED DRAWINGS, SPECIFICATIONS, IDEAS, DESIGNS AND ARRANGEMENTS REPRESENTED THEREBY ARE AND SHALL REMAIN THE PROPERTY OF RRM DESIGN GROUP AND NO PART THEREOF SHALL BE COPIED, DISCLOSED TO OTHERS OR USED IN CONNECTION WITH ANY WORK OR PROJECT OTHER THAN THE SPECIFIED PROJECT FOR WHICH THEY HAVE BEEN PREPARED AND DEVELOPED WITHOUT THE WRITTEN CONSENT OF RRM DESIGN GROUP. VISUAL CONTACT WITH THESE DRAWINGS OR SPECIFICATIONS SHALL CONSTITUTE DISCLAIMER EVIDENCE OF ACCEPTANCE OF THESE RESTRICTIONS. THE SALE OF PRINTED OR REPRODUCED DRAWINGS OR SPECIFICATIONS SHALL NOT BE CONSIDERED A WAIVER OF RRM DESIGN GROUP'S RIGHTS.
RRM DESIGN GROUP COPYRIGHT 2023
RRM IS A CALIFORNIA CORPORATION

CONSULTANT

AGENCY

100% CD SET
NOT FOR CONSTRUCTION

FOURTH ST COMMUNITY CENTER AND PARK

HENDERSON AVE., PORTERVILLE, CA 93257

OVERALL POWER PLAN

NO.	REVISION	DATE
1	PLAN CHECK REVISION 1	5/17/24
2	PLAN CHECK REVISION 2	9/12/24

PROJECT MANAGER: JJ
DRAWN BY: CM
CHECKED BY: JJ
DATE: 2024.01.15
PROJECT NUMBER: 2883-01-RC22
SHEET: E201

PLAN CHECK REVISION 2

Z:\Drafting\Jobs\ES\Qty of Porterville\Fourth Street Community Center & Park\E201.dwg DATE SAVED: 05/29/24 By: Hood DATE PLOTTED: 09/19/24 JOB # 22-173-JJ

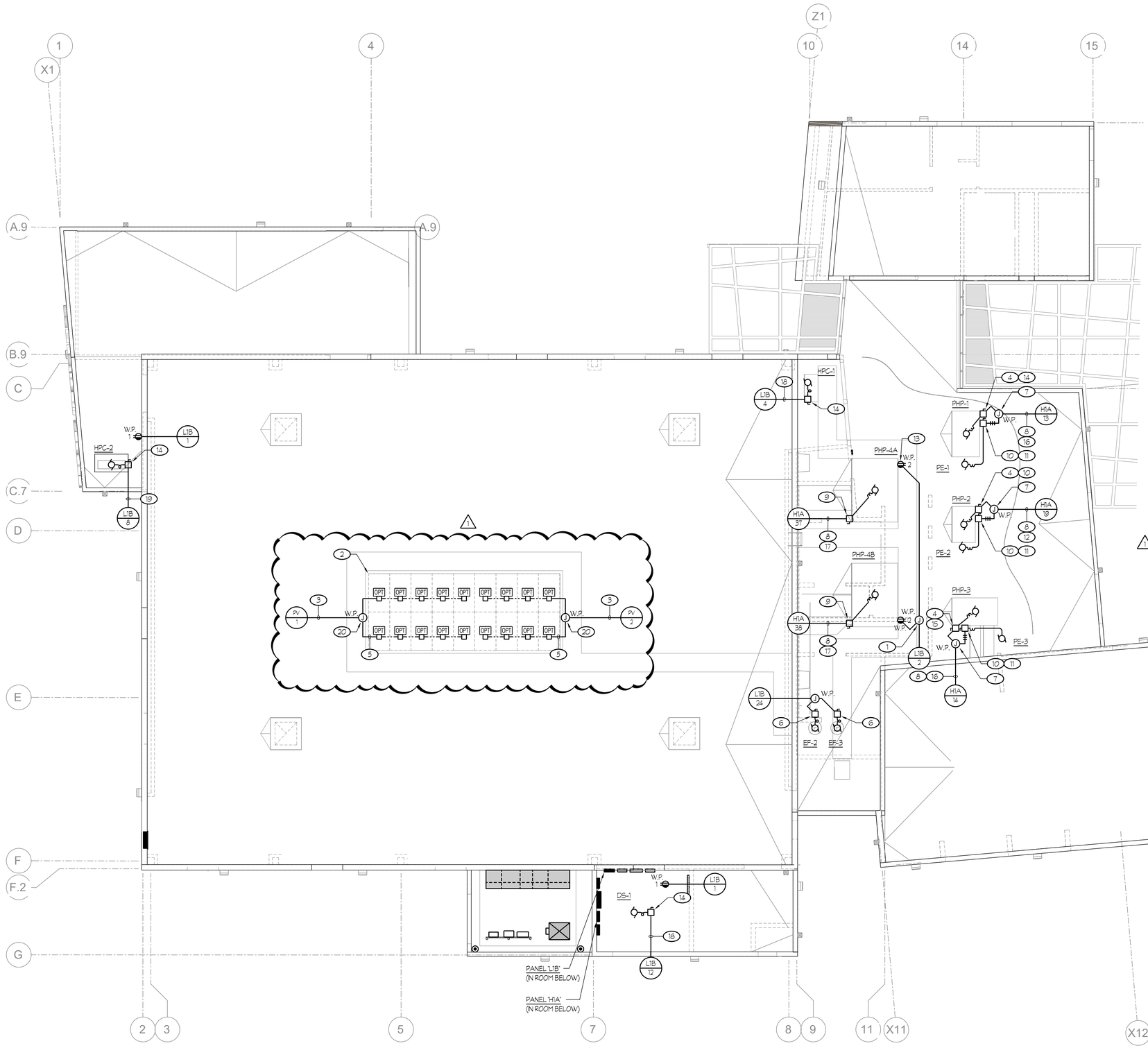

NOTES (THIS SHEET ONLY):

1. MOUNT JUNCTION BOX IN ACCESSIBLE ATTIC SPACE BELOW, TYPICAL, U.O.N..
2. 415W SOLAR PV MODULE. REFER TO ONE-LINE DIAGRAM ON SHEET #E501 AND DETAIL #3/E505, FOR ADDITIONAL REQUIREMENTS.
3. 3/4"C - 2 #10 + 1 #10 EG + 1 #8 CU BARE. ROUTED IN CEILING SPACE BELOW ROOF.
4. PROVIDE AND ENGRAVED NAMEPLATE: "HC DISCONNECT".
5. PV CABLE WITH MC4 CONNECTOR MOUNTED TO UNDERSIDE OF PV MODULE. TYPICAL FOR PV MODULE INTERCONNECTIONS.
6. PROVIDE A 30A, 1-POLE, HEAVY-DUTY RATED, FUSED SAFETY SWITCH AND MOUNT ONTO H.V.A.C. UNIT. PROVIDE FUSES PER MANUFACTURER RECOMMENDATIONS. COORDINATE EXACT LOCATION WITH MECHANICAL CONTRACTOR PRIOR TO ROUGH-IN.
7. PROVIDE A NEW N3R SCREW COVER CAN (8" SQ. x 4" DP.) AND LOCATE AT WHERE THE BRANCH CIRCUIT ROUTES UP THRU THE ROOF.
8. TYPICAL AT ALL H.V.A.C. EQUIPMENT:
   ROUTE BRANCH CIRCUITING UP THRU OPENING OF ROOF CURB AND THEN THRU UNIT TO DISCONNECT SWITCH. PROVIDE LIQUIDTIGHT FLEXIBLE METALLIC CONDUIT INSIDE UNIT FOR ROUTING OF CONDUCTORS.
9. PROVIDE A 200A, 3-POLE, HEAVY-DUTY RATED, FUSED SAFETY SWITCH AND MOUNT ONTO H.V.A.C. UNIT. PROVIDE FUSES PER MANUFACTURER RECOMMENDATIONS. COORDINATE EXACT LOCATION WITH MECHANICAL CONTRACTOR PRIOR TO ROUGH-IN.
10. PROVIDE A 30A, 3-POLE, HEAVY-DUTY RATED, FUSED SAFETY SWITCH AND MOUNT ONTO H.V.A.C. UNIT. PROVIDE FUSES PER MANUFACTURER RECOMMENDATIONS. COORDINATE EXACT LOCATION WITH MECHANICAL CONTRACTOR PRIOR TO ROUGH-IN.
11. PROVIDE ENGRAVED NAMEPLATE: "ECONOMIZER DISCONNECT".
12. 3/4"C - 3 #10 + 1 #10 GND.
13. PROVIDE G.F.C.I. DUPLEX RECEPTACLE INSIDE A WEATHERPROOF OUTLET BOX WITH LOCKABLE WEATHERPROOF "WHILE-IN-USE" COVER (RED-DOT #CKSUV, OR EQUAL) AND MOUNT ONTO HVAC UNIT. COORDINATE EXACT LOCATION WITH MECHANICAL CONTRACTOR PRIOR TO ROUGH-IN. TYPICAL OF 4.
14. PROVIDE A 60A, 3-POLE, HEAVY-DUTY RATED, FUSED SAFETY SWITCH AND MOUNT ONTO H.V.A.C. UNIT. PROVIDE FUSES PER MANUFACTURER RECOMMENDATIONS. COORDINATE EXACT LOCATION WITH MECHANICAL CONTRACTOR PRIOR TO ROUGH-IN.
15. PROVIDE A 100A, 3-POLE, HEAVY-DUTY RATED, FUSED SAFETY SWITCH AND MOUNT ONTO H.V.A.C. UNIT. PROVIDE FUSES PER MANUFACTURER RECOMMENDATIONS. COORDINATE EXACT LOCATION WITH MECHANICAL CONTRACTOR PRIOR TO ROUGH-IN.
16. 1"C - 3 #8 + 1 #10 GND.
17. 1 1/4"C - 3 #2 + 1 #6 GND.
18. 3/4"C - 2 #10 + 1 #10 GND.
19. 3/4"C - 2 #8 + 1 #10 GND.
20. (1) PROVIDE 12" SQ. x 6" DP. WEATHERPROOF ENCLOSURE FOR COMBINING OF PV STRINGS AS REQUIRED.

1 ROOF ELECTRICAL PLAN

A-415 SCALE: 1/8" = 1'-0"

0' 4' 8' 16'

Rose Sing Eastham & Associates
Electrical Consultants
131 S. Dunworth ~ (559)733-2671
Visalia, California 93292-6705

REGISTERED PROFESSIONAL ENGINEER ROSE KIRK EASTHAM No. E-13786 Exp. 6/30/25 ELECTRICAL STATE OF CALIFORNIA

rrm design group
rrmdesign.com | (805) 543-1794
3765 SOUTH HIGUERA STREET, SUITE 102
SAN LUIS OBISPO, CA 93401

THE INCLUDED DRAWINGS, SPECIFICATIONS, IDEAS, DESIGNS AND ARRANGEMENTS REPRESENTED THEREBY ARE AND SHALL REMAIN THE PROPERTY OF RRM DESIGN GROUP AND NO PART THEREOF SHALL BE COPIED, DISCLOSED TO OTHERS OR SUBSTANTIALLY USED FOR ANY PURPOSE WHATSOEVER OTHER THAN THE PROJECT FOR WHICH THEY HAVE BEEN PREPARED AND DEVELOPED, WITHOUT THE WRITTEN CONSENT OF RRM DESIGN GROUP. VISUAL CONTACT WITH THESE DRAWINGS OR SPECIFICATIONS SHALL CONSTITUTE DISCLAIMER EVIDENCE OF ACCEPTANCE OF THESE RESTRICTIONS. THE SALE OF THESE DOCUMENTS IS NOT A WAIVER OF RRM DESIGN GROUP'S RIGHTS, SHALL NOT BE CONSIDERED A WAIVER OF RRM DESIGN GROUP'S RIGHTS.
RRM DESIGN GROUP COPYRIGHT 2023
RRM IS A CALIFORNIA CORPORATION

CONSULTANT

AGENCY

100% CD SET
NOT FOR CONSTRUCTION

FOURTH ST COMMUNITY CENTER AND PARK
HENDERSON AVE., PORTERVILLE, CA 93257

ROOF ELECTRICAL PLAN

NO.	REVISION	DATE
1	PLAN CHECK REVISION 1	5/17/24
2	PLAN CHECK REVISION 2	9/12/24
△		
△		
△		
△		

PROJECT MANAGER: JJ	
DRAWN BY: CM	CHECKED BY: JJ
DATE: 2024.01.15	
PROJECT NUMBER: 2883-01-RC22	
SHEET: E202	

PLAN CHECK REVISION 2

Z:\Drafting\Jobs\9SE\City of Porterville\Fourth Street Community Center & Park\E202.dwg DATE SAVED: 05/29/24 By: Hood DATE PLOTTED: 09/19/24 JOB # 22-173-JJ

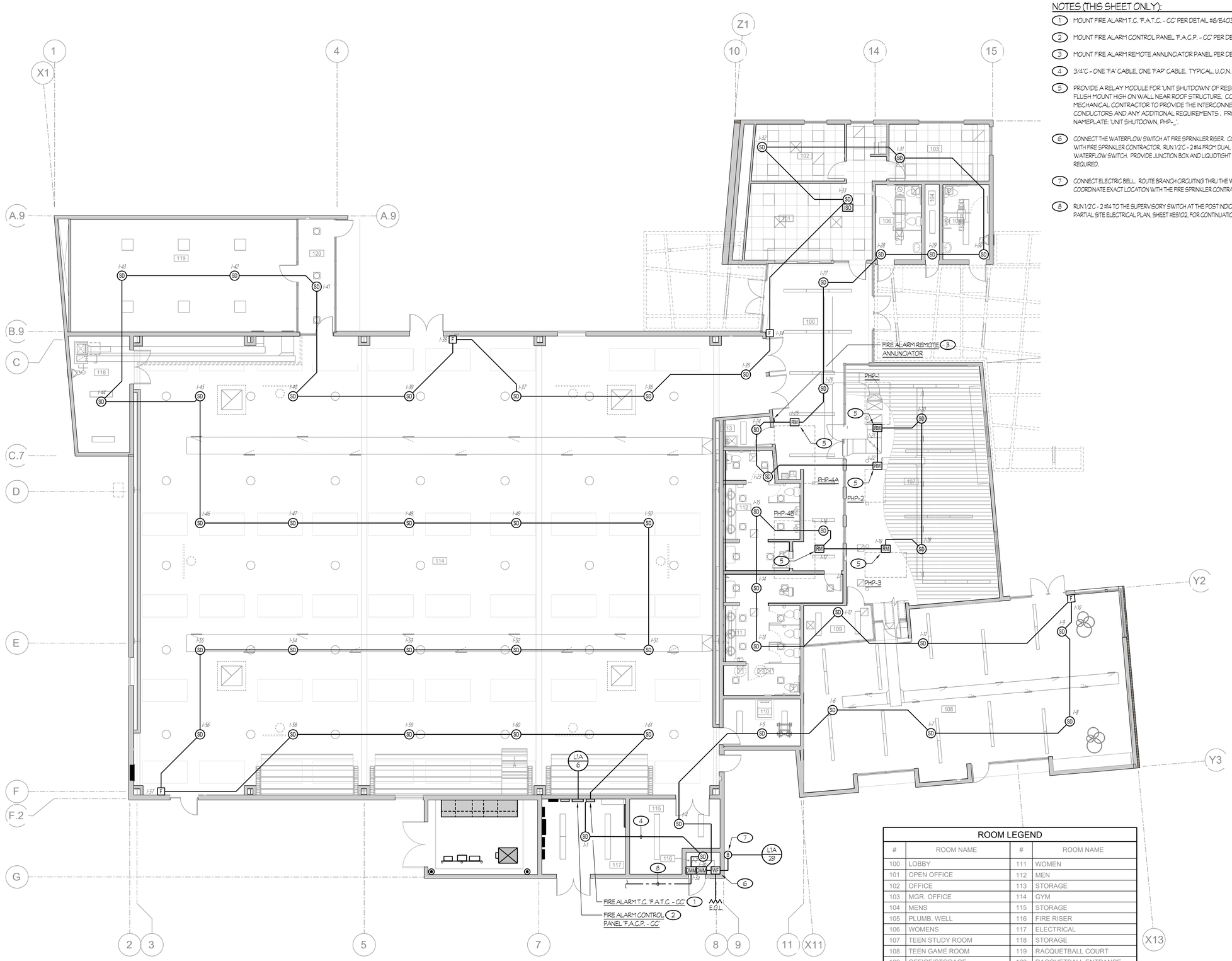

NOTES (THIS SHEET ONLY):

1. MOUNT FIRE ALARM T.C. "F.A.T.C. - CC" PER DETAIL #6/E403.
2. MOUNT FIRE ALARM CONTROL PANEL "F.A.C.P. - CC" PER DETAIL #3/E403
3. MOUNT FIRE ALARM REMOTE ANNUNCIATOR PANEL PER DETAIL #7/E403.
4. 3/4"C - ONE "FA" CABLE, ONE "FAP" CABLE. TYPICAL, U.O.N..
5. PROVIDE A RELAY MODULE FOR "UNIT SHUTDOWN" OF RESPECTIVE AC UNIT. FLUSH MOUNT HIGH ON WALL NEAR ROOF STRUCTURE. COORDINATE WITH MECHANICAL CONTRACTOR TO PROVIDE THE INTERCONNECTION CONDUIT/ CONDUCTORS AND ANY ADDITIONAL REQUIREMENTS . PROVIDE AN ENGRAVED NAMEPLATE: "UNIT SHUTDOWN, PHP-_".
6. CONNECT THE WATERFLOW SWITCH AT FIRE SPRINKLER RISER. COORDINATE EXACT LOCATION WITH FIRE SPRINKLER CONTRACTOR. RUN 1/2"C - 2 #14 FROM DUAL MONITOR MODULE TO THE WATERFLOW SWITCH. PROVIDE JUNCTION BOX AND LIQUIDTIGHT FLEXIBLE METALLIC CONDUIT AS REQUIRED.
7. CONNECT ELECTRIC BELL. ROUTE BRANCH CIRCUITING THRU THE WATERFLOW SWITCH. COORDINATE EXACT LOCATION WITH THE FIRE SPRINKLER CONTRACTOR PRIOR TO ROUGH-IN.
8. RUN 1/2"C - 2 #14 TO THE SUPERVISORY SWITCH AT THE POST INDICATOR VALVE "P.I.V.". REFER TO PARTIAL SITE ELECTRICAL PLAN, SHEET #ES1.02, FOR CONTINUATION.

ROOM LEGEND

#	ROOM NAME	#	ROOM NAME
100	LOBBY	111	WOMEN
101	OPEN OFFICE	112	MEN
102	OFFICE	113	STORAGE
103	MGR. OFFICE	114	GYM
104	MENS	115	STORAGE
105	PLUMB. WELL	116	FIRE RISER
106	WOMENS	117	ELECTRICAL
107	TEEN STUDY ROOM	118	STORAGE
108	TEEN GAME ROOM	119	RACQUETBALL COURT
109	OFFICE/STORAGE	120	RACQUETBALL ENTRANCE
110	MECHANICAL		

1 FIRE ALARM PLAN INITIATION PLAN

A-415 SCALE: 1/8" = 1'-0"

Rose Sing Eastham & Associates
Electrical Consultants
131 S. Dunworth ~ (559)733-2671
Visalia, California 93292-6705

REGISTERED PROFESSIONAL ENGINEER ROSEMARY KIRK EASTHAM Exp. 6/30/25 ELECTRICAL STATE OF CALIFORNIA

rrm design group
rrmdesign.com | (805) 543-1794
3765 SOUTH HIGUERA STREET, SUITE 102
SAN LUIS OBISPO, CA 93401

THE INCLUDED DRAWINGS, SPECIFICATIONS, IDEAS, DESIGNS AND ARRANGEMENTS REPRESENTED THEREBY ARE AND SHALL REMAIN THE PROPERTY OF RRM DESIGN GROUP AND NO PART THEREOF SHALL BE COPIED, DISCLOSED TO OTHERS OR EXPLOITED EXCEPT WITH WRITTEN CONSENT OF RRM DESIGN GROUP, AND ONLY FOR THE PROJECT FOR WHICH THEY HAVE BEEN PREPARED AND DEVELOPED. WITHOUT THE WRITTEN CONSENT OF RRM DESIGN GROUP, VISUAL CONTACT WITH THESE DRAWINGS OR SPECIFICATIONS SHALL CONSTITUTE DISCLAIMER EVIDENCE OF ACCEPTANCE OF THESE RESTRICTIONS. THE SALE OF THE PROJECT DESIGNED BY RRM DESIGN GROUP SHALL NOT BE CONSIDERED A WAIVER OF RRM DESIGN GROUP'S RIGHTS.
RRM DESIGN GROUP COPYRIGHT 2023
RRM IS A CALIFORNIA CORPORATION

CONSULTANT

AGENCY

100% CD SET
NOT FOR CONSTRUCTION

FOURTH ST COMMUNITY CENTER AND PARK
HENDERSON AVE., PORTERVILLE, CA 93257

FIRE ALARM INITIATION PLAN

NO.	REVISION	DATE
1	PLAN CHECK REVISION 1	5/17/24
2	PLAN CHECK REVISION 2	9/12/24

PROJECT MANAGER: JJ
DRAWN BY: CM
CHECKED BY: JJ
DATE: 2024.01.15
PROJECT NUMBER: 2883-01-RC22
SHEET: E301

PLAN CHECK REVISION 2

Z:\Darling\Jobs\RSE\City of Porterville\Fourth Street Community Center & Park\E301.dwg DATE SAVED: 05/29/24 By: Hood DATE PLOTTED: 09/19/24 JOB # 22-173-JJ

NOTES (THIS SHEET ONLY):

1. 3/4"C - 4 #12. TYPICAL, U.O.N..
2. TO FIRE ALARM CONTROL PANEL "F.A.C.P. - CC."

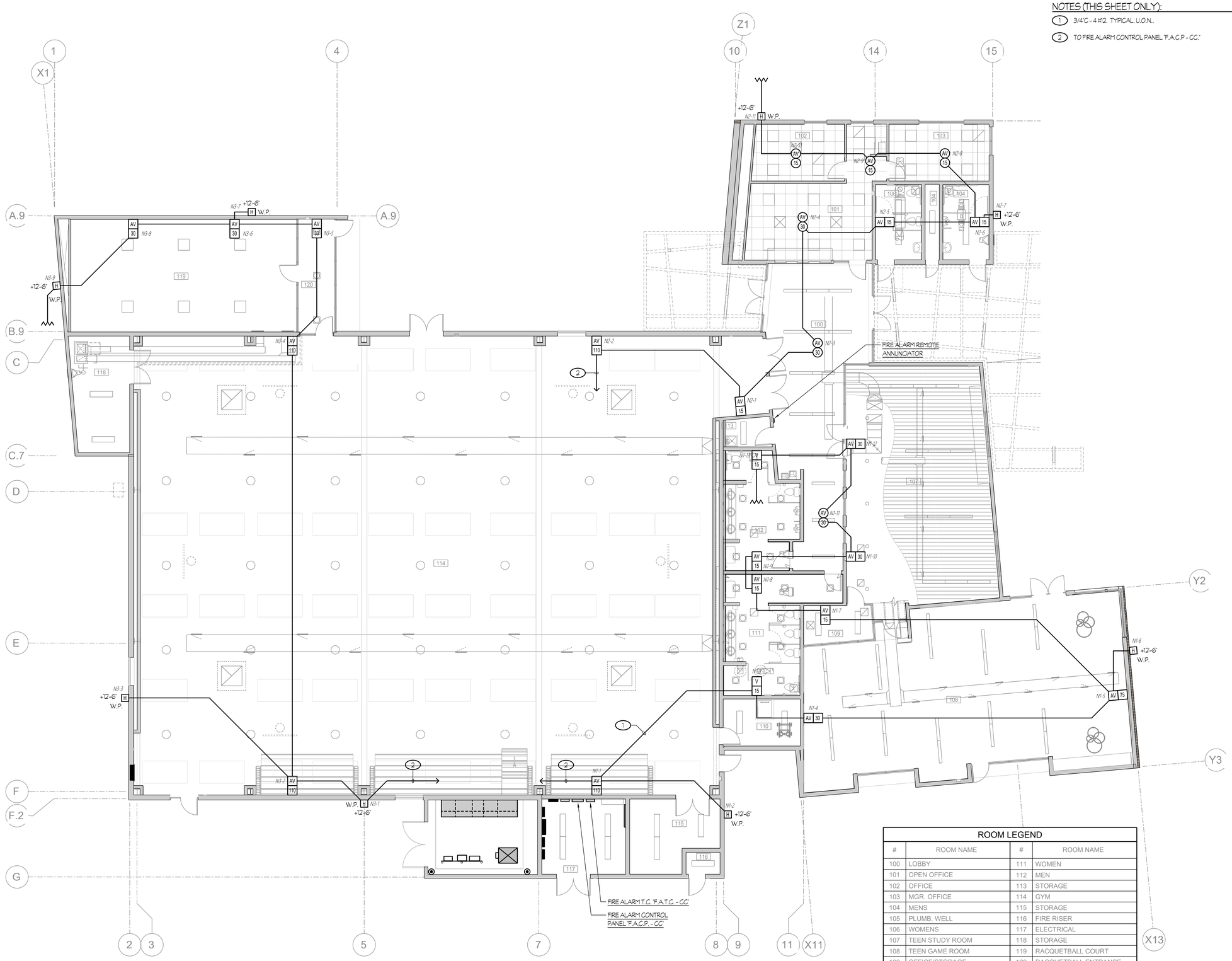

ROOM LEGEND			
#	ROOM NAME	#	ROOM NAME
100	LOBBY	111	WOMEN
101	OPEN OFFICE	112	MEN
102	OFFICE	113	STORAGE
103	MGR. OFFICE	114	GYM
104	MENS	115	STORAGE
105	PLUMB. WELL	116	FIRE RISER
106	WOMENS	117	ELECTRICAL
107	TEEN STUDY ROOM	118	STORAGE
108	TEEN GAME ROOM	119	RACQUETBALL COURT
109	OFFICE/STORAGE	120	RACQUETBALL ENTRANCE
110	MECHANICAL		

1 FIRE ALARM NOTIFICATION PLAN

A-415 SCALE: 1/8" = 1'-0"

0' 4' 8' 16'

Rose Sing Eastham & Associates
Electrical Consultants
131 S. Dunworth – (559)733-2671
Visalia, California 93292-6705

REGISTERED PROFESSIONAL ENGINEER
ALLEN KIRK EASTHAM
No. E-15788
Exp. 6/30/25
ELECTRICAL
STATE OF CALIFORNIA

rrm design group
rrmdesign.com | (805) 543-1794
3765 SOUTH HIGUERA STREET, SUITE 102
SAN LUIS OBISPO, CA 93401

THE INCLUDED DRAWINGS, SPECIFICATIONS, IDEAS, DESIGNS AND ARRANGEMENTS REPRESENTED THEREBY ARE AND SHALL REMAIN THE PROPERTY OF RRM DESIGN GROUP AND NO PART THEREOF SHALL BE COPIED, DISCLOSED TO OTHERS OR USED IN CONNECTION WITH ANY WORK OR PROJECT OTHER THAN THE SPECIFIED PROJECT FOR WHICH THEY HAVE BEEN PREPARED AND DEVELOPED WITHOUT THE WRITTEN CONSENT OF RRM DESIGN GROUP. VISUAL CONTACT WITH THESE DRAWINGS OR SPECIFICATIONS SHALL CONSTITUTE CONCLUSIVE EVIDENCE OF ACCEPTANCE OF THESE RESTRICTIONS. SUBMITTAL OF THESE DOCUMENTS FOR PUBLIC AGENCY REVIEW SHALL NOT BE CONSIDERED A WAIVER OF RRM DESIGN GROUP'S RIGHTS.
RRM DESIGN GROUP COPYRIGHT 2023
RRM IS A CALIFORNIA CORPORATION

CONSULTANT

AGENCY

100% CD SET
NOT FOR CONSTRUCTION

FOURTH ST COMMUNITY CENTER AND PARK
HENDERSON AVE., PORTERVILLE, CA 93257

FIRE ALARM NOTIFICATION PLAN

NO.	REVISION	DATE
1	PLAN CHECK REVISION 1	5/17/24
2	PLAN CHECK REVISION 2	9/12/24

PROJECT MANAGER: JJ
DRAWN BY: CM
CHECKED BY: JJ
DATE: 2024.01.15
PROJECT NUMBER: 2883-01-RC22
SHEET: E302

PLAN CHECK REVISION 2

Z:\Drafting\Jobs\RSE\City of Porterville\Fourth Street Community Center & Park\E302.dwg DATE SAVED: 05/29/24 BY: Hhood DATE PLOTTED: 09/19/24 JOB #: 22-173-JJ

FIRE ALARM SYSTEM SEQUENCE OF OPERATIONS

RESULT OF OPERATION	TYPE OF INITIATION: MANUAL PULL STATION	AREA SMOKE/ HEAT DETECTOR (1)	CARBON MONOXIDE DETECTOR (2)	LOSS OF POWER	SHORT CIRCUIT/ GROUND FAULT	FIRE SPRINKLER RISER WATER FLOW SWITCH	FIRE SPRINKLER RISER TAMPER SWITCH	SMOKE DETECTOR FOR DOOR RELEASING	KITCHEN HOOD FIRE SUPPRESSION SYSTEM
ANNUNCIATE ALARM AT FIRE ALARM CONTROL PANEL	YES	YES	—	—	—	YES	—	YES	YES
ANNUNCIATE TROUBLE AT FIRE ALARM CONTROL PANEL	—	—	—	YES	YES	—	YES	—	—
ANNUNCIATE SUPERVISORY AT FIRE ALARM CONTROL PANEL	—	—	YES	—	—	—	—	—	—
ACTIVATE ALL AUDIBLE AND VISUAL ALARM SIGNALS	YES	YES	—	—	—	YES	—	YES	YES
TRANSFER TO BATTERY BACK-UP	—	—	—	YES	—	—	—	—	—
(1) RELEASE ELECTROMAGNETIC DOOR HOLDERS	—	YES	—	—	—	—	—	YES	—
(2) SHUTDOWN RESPECTIVE A/C UNIT	—	YES	—	—	—	—	—	—	—
(2) CLOSE SMOKE/FIRE DAMPER	—	YES	—	YES	—	—	—	—	—
ACTIVATE TEMPORAL PATTERN, CODE 4, AT RESPECTIVE DETECTOR	—	—	YES	—	—	—	—	—	—
(3) ANNUNCIATE SUPERVISORY AT THE FIRE ALARM CONTROL PANEL	—	—	YES	—	—	—	—	—	—
ANNUNCIATE AT 24 HR. ATTENDED LOCATION	YES	YES	YES	YES	—	YES	YES	—	YES
CENTRAL STATION FOR MONITORING (ALARM)	YES	YES	—	—	—	YES	—	—	YES
CENTRAL STATION FOR MONITORING (TROUBLE)	—	—	—	YES	—	—	YES	—	—
CENTRAL STATION FOR MONITORING (SUPERVISORY)	—	—	—	—	—	—	—	—	—

(1) OR ACTIVATE THE TIME-DELAY RELEASING DEVICE AT OVERHEAD COILING DOOR.

(2) THIS OPERATION SHALL BE ACCOMPLISHED BY UTILIZING THE TOTAL SMOKE COVERAGE SYSTEM TO ACTIVATE THE RESPECTIVE RELAY MODULE. THE CONTACTS SHALL BE PROGRAMMED TO "OPEN", THUS DE-ENERGIZING THE 120V POWER TO THE ACTUATOR OF THE SMOKE/FIRE DAMPER OR "OPENING" THE H.V.A.C. CONTROL CIRCUIT.

(3) UPON DETECTION OF CARBON MONOXIDE, A SUPERVISORY SIGNAL SHALL ANNUNCIATE A BOTH THE FIRE ALARM CONTROL PANEL "F.A.C.P. ".

FIRE ALARM SYSTEM GENERAL NOTES

1. APPLICABLE STANDARD NFPA 72, AS ADOPTED AND AMENDED IN CBC CHAPTER 35.
2. INSTALLATION OF THE SYSTEMS SHALL NOT BE STARTED UNTIL DETAILED DESIGN DOCUMENTS AND SPECIFICATION, INCLUDING STATE FIRE MARSHAL LISTING NUMBERS FOR EACH COMPONENT OF THE SYSTEM, HAS BEEN APPROVED BY DSA.
3. UPON COMPLETION OF SYSTEM INSTALLATION, A SATISFACTORY TEST OF THE ENTIRE SYSTEM SHALL BE MADE IN THE PRESENCE OF A DSA PROJECT INSPECTOR TEST SHALL INCLUDE ALL INFORMATION PER NFPA 72 14.6.2.4 AND FIGURE 7.8.2(a) AND READ OUT VERIFICATION FORM FROM CENTER STATION.
4. A STAMPED SET OF APPROVED FIRE ALARM DESIGN DOCUMENTS SHALL BE ON THE JOB SITE AND USED FOR INSTALLATION.
5. ANY DISCREPANCIES BETWEEN THE DRAWINGS AND THE CODE OR RECOGNIZED STANDARDS SHALL BE BROUGHT TO THE ATTENTION OF DSA AND THE ARCHITECT/ ENGINEER OF THE PROJECT.
6. DSA, ARCHITECT/ENGINEER AND OWNER SHALL BE NOTIFIED A MINIMUM OF 48 HOURS PRIOR TO THE FINAL INSPECTION AND/OR TESTING.
7. ALL PENETRATIONS THROUGH RATED ASSEMBLIES REQUIRING OPENING PROTECTION SHALL BE PROVIDED WITH A PENETRATION FIRE STOP SYSTEM AS IDENTIFIED IN CBC CHAPTER 7, UL OR OTHER APPROVED LAB TESTING CRITERIA. APPROVED TYPES OF MATERIALS SHALL BE IDENTIFIED WITHIN THE PROJECT SPECIFICATIONS WITHIN THE FIRE ALARM SECTION.
8. WALL MOUNTED VISIBLE NOTIFICATION DEVICES SHALL HAVE THEIR BOTTOMS MOUNTED AT 80" MINIMUM AND 96" MAXIMUM FROM FINISHED FLOOR.
9. WALL MOUNTED AUDIBLE NOTIFICATION DEVICES SHALL HAVE THEIR TOPS MOUNTED AT 90" MINIMUM AND 100" MAXIMUM FROM FINISHED FLOOR AND NO CLOSER THAN 6" TO A HORIZONTAL STRUCTURE.
10. AUDIBLE DEVICES SHALL PROVIDE A SOUND PRESSURE LEVEL OF 15 DECIBELS (dBA) ABOVE THE AVERAGE AMBIENT SOUND LEVEL OR FIVE dBA ABOVE THE MAXIMUM SOUND LEVEL HAVING A DURATION OF AT LEAST 60 SECONDS, WHICHEVER IS GREATER, IN EVERY OCCUPIABLE SPACE WITHIN THE BUILDING.
11. AUDIBLE DEVICES SHALL BE SYNCHRONIZED TEMPORAL CODE 3 PATTERN FOR A FIRE ALARM SIGNAL. AUDIBLE DEVICES SHALL ALSO SOUND A TEMPORAL CODE 4 PATTERN FOR A CARBON MONOXIDE SIGNAL. THE EXISTING FIRE ALARM CONTROL PANEL WILL PRODUCE/GENERATE BOTH SIGNALS.
12. THE CONTRACTOR SHALL ADJUST/INSTALL ALL DEVICES TO MAXIMIZE PERFORMANCE AND TO MINIMIZE FALSE ALARMS.
13. VISIBLE DEVICES SHOULD NOT EXCEED TWO FLASHES PER SECOND AND SHOULD NOT BE SLOWER THAN ONE FLASH EVERY SECOND. THE DEVICE SHALL HAVE A PULSING LIGHT SOURCE NOT LESS THAN 15 CANDELA. VISIBLE DEVICES WITHIN 55' FROM EACH OTHER SHALL BE SYNCHRONIZED.
14. UNDERGROUND AND EXTERIOR CONDUITS TO HAVE WATER TIGHT FITTINGS AND WIRE TO BE APPROVED FOR WET LOCATIONS.
15. ALL FIRE ALARM WIRING SHALL BE FPL OR FPLP (FIRE POWER LIMITED OR FIRE POWER LIMITED PLENUM) AS REQUIRED FOR APPLICATION. WIRING IN CONDUIT ABOVE GROUND MAY BE TYPE THHN OR THWN.
16. PER CEC STANDARDS, ALL WIRING IS TO BE PULLED THROUGH EACH JUNCTION BOX AND CONNECTED DIRECTLY TO EACH FIRE DEVICE. DO NOT SPLICE THE WIRE. ALL BOXES TO BE SIZED PER CEC.
17. SMOKE DETECTORS SHALL NOT BE ANY CLOSER THAN 1' FROM FIRE SPRINKLERS OR 3' FROM ANY SUPPLY DIFFUSER. IN AREA OF CONSTRUCTION OR POSSIBLE DAMAGE/ CONTAMINATION ON NEWLY INSTALLED FIRE ALARM, DEVICES SHALL BE COVERED UNTIL THAT AREA IS READY TO BE TURNED OVER TO THE OWNER.
18. ALL FIRE ALARM CIRCUITS SHALL BE IN CONDUIT, SURFACE RACEWAY OR OPEN RUN ABOVE CEILING, UNDER FLOORS AND IN WALLS IN A NEAT AND PROTECTED MANNER AS INDICATED ON DESIGN DOCUMENTS. EXPOSED CIRCUITS ARE ONLY PERMITTED WHEN NOTED AS EXPOSED ON DESIGN DOCUMENTS.
19. FIRE ALARM PANEL, REMOTES, AND COMPONENTS SHALL BE SECURED TO MOUNTING SURFACES PER MANUFACTURERS SPECIFICATIONS. NO SINGLE DEVICE SHALL EXCEED 20 LBS. WITHOUT SPECIAL MOUNTING DETAILS.
20. A DEDICATED BRANCH CIRCUIT SHALL BE PROVIDED FOR FIRE ALARM EQUIPMENT. THIS CIRCUIT SHALL BE ENERGIZED FROM THE COMMON USE AREA PANEL AND SHALL HAVE NO OTHER OUTLETS. THE BREAKER SHALL HAVE A RED LOCKING DEVICE TO BLOCK THE HANDLE IN THE "ON" POSITION. THE CIRCUIT BREAKER SHALL BE LABELED "FIRE ALARM CIRCUIT CONTROL". CIRCUIT ID TO BE LABELED AT FIRE PANELS/EXTENDERS.
21. THE INSTALLING CONTRACTOR SHALL PROVIDE A COMPLETED "SYSTEM RECORD OF COMPLETION" PER NFPA 72, FIGURE 17.8.2.
22. FIRE ALARM CONTROL PANELS AND REMOTE ANNUNCIATORS SHALL BE INSTALLED WITH THEIR BOTTOMS MOUNTED AT 48" ABOVE THE FINISHED FLOOR.
23. MICROPHONES ASSOCIATED WITH EMERGENCY VOICE ALARM COMMUNICATION SYSTEMS (EVAC) SHALL BE ACCESSIBLE FOR USE, INSTALLED IN COMPLIANCE WITH CBC SECTIONS 11B-305 AND 11B-308.
24. THE INSTALLING CONTRACTOR SHALL PROVIDE SYSTEM PROGRAMMING FOR SUPERVISORY MONITORING PER CBC SECTION 901.6.2.
25. SUPERVISORY MONITORING SHALL BE TESTED AND VERIFIED AS SENDING CORRECT SIGNALS IN CONJUNCTION WITH FINAL ACCEPTANCE TEST.
26. OWNER SHALL BE RESPONSIBLE FOR ESTABLISHING A FIRE SYSTEM MONITORING CONTRACT OR PROVISIONS.
27. PROVIDE AN ENGRAVED NAMEPLATE INDICATING THE D.S.A. APPLICATION NUMBER, FILE NUMBER AND DATE OF INSTALLATION AT EACH FIRE ALARM CONTROL PANEL "F.A.C.P.", AT EACH FIRE ALARM TRANSPONDER "F.A.T." AND AT EACH FIRE ALARM POWER EXPANDER PANEL "P.E.P.".
   - A. THE PRIMARY POWER SUPPLY TO EACH FIRE ALARM CONTROL PANEL "F.A.C.P.", TO EACH FIRE ALARM TRANSPONDER "F.A.T." AND TO EACH FIRE ALARM POWER EXPANDER PANEL "P.E.P." SHALL BE IN ACCORDANCE WITH NFPA 72 10.6.5 AND AS FOLLOWS:
     - a) THE CIRCUIT BREAKER FEEDING THE RESPECTIVE PANEL SHALL BE LOCATED IN A LOCKED ROOM OR BEHIND A LOCKABLE DOOR AND BE READILY ACCESSIBLE TO AUTHORIZED PERSONNEL ONLY.
     - b) THE CIRCUIT BREAKER SHALL BE EQUIPPED WITH A LOCK-ON ACCESSORY. PAINT LOCK-ON ACCESSORY "RED" IN COLOR.
     - c) THE CIRCUIT BREAKER SHALL HAVE AN ENGRAVED NAMEPLATE THAT IDENTIFIES IT AS A "FIRE ALARM CIRCUIT". THIS ENGRAVED NAMEPLATE SHALL HAVE WHITE LETTERS ON A RED BACKGROUND. MOUNT ONTO THE INTERIOR TRIM AND LOCATE ADJACENT TO CIRCUIT BREAKER WHERE POSSIBLE.
     - d) THE LOCATION OF THE CIRCUIT DISCONNECTING MEANS SHALL BE PERMANENTLY IDENTIFIED AT EACH FIRE ALARM CONTROL PANEL "F.A.C.P.", AT EACH FIRE ALARM TRANSPONDER "F.A.T." AND AT EACH FIRE ALARM POWER EXPANDER PANEL "P.E.P.". PROVIDE AN ENGRAVED NAMEPLATE (WHITE LETTERS ON A RED BACKGROUND) WHICH INDICATES THIS.
   - B. ALL ENGRAVED NAMEPLATES SHALL BE ATTACHED TO THE FRONT OF THE RESPECTIVE ENCLOSURE WITH SCREWS OR RIVETS.
28. PROVIDE A COPY OF THE BATTERY CALCULATION AT EACH FIRE ALARM CONTROL PANEL "F.A.C.P.", AT EACH FIRE ALARM TRANSPONDER "F.A.T." AND AT EACH FIRE ALARM POWER EXPANDER PANEL "P.E.P.". BATTERY CALCULATION SHALL CONTAIN INFORMATION AS NOTED ON SCHEDULES AND BE PLASTIC LAMINATED. MOUNT ONTO INSIDE FACE OF DOOR.

FIRE ALARM SYSTEM EQUIPMENT SPECIFICATIONS

SYMBOL	DESCRIPTION	MODEL #	CSFM LISTING #	BACKBOX REQUIREMENTS (B)	MOUNTING HEIGHT (TO CENTER U.O.N.)
FACP	FIRE ALARM CONTROL PANEL "F.A.C.P." INTELLIGENT LOOP INTERFACE - MAIN BOARD INTELLIGENT LOOP INTERFACE - EXPANSION BOARD LCD DISPLAY POWER SUPPLY DIGITAL ALARM COMMUNICATOR/ TRANSMITTER ENCLOSURE WITH PLEXI-GLASS DOOR INNER DOOR MOUNTING PLATE	 GAMEWELL/F.C.I. #ILI-MB-E3 GAMEWELL/F.C.I. #IL195-S-E3 GAMEWELL/F.C.I. #LCD-E3 GAMEWELL/F.C.I. #PM-9 GAMEWELL/F.C.I. #DACT-E3 GAMEWELL/F.C.I. #E3BB-RD/INCC GAMEWELL/F.C.I. #E3ID2-D GAMEWELL/F.C.I. #E3-INCC-DPLATE	7165-1703:0125	INCLUDED	+60" PER DETAIL #3/E403
ANN	FIRE ALARM REMOTE NETWORK ANNUNCIATOR	GAMEWELL/F.C.I. #LCD-7100	7165-1703:0125	INCLUDED	PER DETAIL #7/E403
F	ADDRESSABLE MANUAL PULL STATION	GAMEWELL/F.C.I. #MS-7AF	7150-1703:0119	4" SQ. x 2 1/8" DP. OUTLET BOX	PER DETAIL #1/E403
SD	ADDRESSABLE PHOTOELECTRONIC SMOKE DETECTOR	GAMEWELL/F.C.I. #ASD-PL3/B300-6	7272-1703:0501 7300-1653:0109	3.5" OCTAGON BOX OR 4" OCTAGON BOX WITH RAISED ROUND COVER	PER DETAIL #1/E403
SD / ISO	ADDRESSABLE PHOTOELECTRONIC SMOKE DETECTOR WITH ISOLATOR BASE	GAMEWELL/F.C.I. #ASD-PL3/B224BI-WH	7272-1703:0501 7300-1653:0126	3.5" OCTAGON BOX OR 4" OCTAGON BOX WITH RAISED ROUND COVER	PER DETAIL #1/E403
MM	ADDRESSABLE MONITOR MODULE	GAMEWELL/F.C.I. #AMM-4F	7300-1703:0102	4" SQ. x 2 1/8" DP. OUTLET BOX	—
DMM	ADDRESSABLE DUAL MONITOR MODULE	GAMEWELL/F.C.I. #AMM-2IF	7300-1703:0107	4" SQ. x 2 1/8" DP. OUTLET BOX	—
RM	ADDRESSABLE RELAY CONTROL MODULE	GAMEWELL/F.C.I. #AOM-2RF	7300-1703:0102	4" SQ. x 2 1/8" DP. OUTLET BOX	—
SCM	ADDRESSABLE SUPERVISED CONTROL MODULE	GAMEWELL/F.C.I. #AOM-2SF	7300-1703:0102	4" SQ. x 2 1/8" DP. OUTLET BOX	—
AV / 15 30, 95	HORN/STROBE, CEILING MOUNTED (CANDELA RATING AS NOTED)	SYSTEM SENSOR #PC2R	7125-1653:0188	4" SQ. x 2 1/8" DP. OUTLET BOX WITH 1 1/2" DP. BOX EXTENSION	PER DETAIL #1/E403
AV / 15 30, 75, 95	HORN STROBE, WALL MOUNTED (CANDELA RATING AS NOTED)	SYSTEM SENSOR #P2RK	7125-1653:01884	4" SQ. x 2 1/8" DP. OUTLET BOX	PER DETAIL #1/E403
H W.P.	EXTERIOR HORN, WALL MOUNTED	SYSTEM SENSOR #HRK	7320-1653:0189	PROVIDE METAL WEATHERPROOF BACKBOX	—
(A) E.O.L.	END OF LINE RESISTOR	—	—	—	—
WF	WATERFLOW SWITCH (AT FIRE SPRINKLER RISER)	PROVIDED BY OTHERS	—	—	VERIFY EXACT LOCATION WITH FIRE SPRINKLER CONTR.
TS	TAMPER SWITCH (AT FIRE SPRINKLER RISER)	PROVIDED BY OTHERS	—	—	VERIFY EXACT LOCATION WITH FIRE SPRINKLER CONTR.
"FA" CABLE	ADDRESSABLE FIRE ALARM CABLE (INDOORS)	WEST PENN #D990	7161-0859:0101	—	—
"SFA" CABLE	ADDRESSABLE FIRE ALARM CABLE (OUTDOORS)	WEST PENN #AQ225	7161-0859:0101	—	—

NOTES (FIRE ALARM SYSTEM EQUIPMENT SPECIFICATIONS):

(A) END OF LINE RESISTORS FOR CONVENTIONAL DEVICES CONNECTED TO ADDRESSABLE MONITOR MODULE DEVICES AND/OR ADDRESSABLE CONTROL MODULES SHALL BE 3.9K OHM, 1/2 WATT.

(B) VERIFY BACKBOX REQUIREMENTS WITH FIRE ALARM SYSTEM EQUIPMENT SUPPLIER PRIOR TO ROUGH-IN.

FIRE ALARM LEVEL OF AUDIBILITY

ALARM INDICATING DEVICES OF A FIRE ALARM SYSTEM INTENDED TO ALERT ALL OCCUPANTS SHALL BE SO LOCATED AND UNOBSTRUCTED AS TO CAUSE A LEVEL OF AUDIBILITY OF NOT LESS THAN 15db ABOVE AMBIENT NOISE LEVELS MEASURED FOUR FEET ABOVE THE FLOOR INSIDE BUILDING.

AMBIENT NOISE LEVELS SHALL BE CONSTRUED TO MEAN THAT WHICH CAN NORMALLY BE EXPECTED TO EXIST WHEN THE FACILITY, BUILDING, ROOM OR AREA IS FUNCTIONING UNDER NORMAL OPERATIVE OR WORKING CONDITIONS.

THE FIRE ALARM SIGNAL SHALL COMPLY WITH THE CALIFORNIA EDUCATION CODE, SECTIONS 32000 AND 32004, AND BE A TEMPORAL PATTERN, CODE 3 AND THEN FOLLOWED BY ANY VOICE MESSAGES.

SCOPE OF WORK

1. PROVIDE A NEW AUTOMATIC FIRE ALARM SYSTEM WITH SUPPLEMENTAL MANUAL FIRE DETECTION.
2. PROVIDE A FIRE ALARM CONTROL PANEL, FIRE ALARM ANNUNCIATOR, ADDRESSABLE INITIATION DEVICES, NOTIFICATION APPLIANCES, CONDUIT, CABLING AND CONDUCTORS AS SHOWN ON THE DRAWINGS.

FIRE ALARM MONITORING NOTE

AUTOMATIC FIRE ALARM SYSTEMS SHALL TRANSMIT THE ALARM, SUPERVISORY AND TROUBLE SIGNALS TO AN APPROVED SUPERVISING STATION IN ACCORDANCE WITH NFPA 72. THE SUPERVISING STATION SHALL BE LISTED AS EITHER UUFX (CENTRAL STATION) OR UUJS (REMOTE AND PROPRIETARY) BY UNDERWRITERS LABORATORY (UL) OR SHALL COMPLY WITH THE REQUIREMENTS OF STANDARD FM 3011. SUPERVISION OF SYSTEM AND LEASED TELEPHONE LINES SHALL BE ARRANGED BY OWNER.

FIRE ALARM RECORD DOCUMENTS CABINET NFPA 72, 7.7.2

- EVERY NEW FIRE ALARM SYSTEM SHALL PROVIDE A DOCUMENTATION CABINET, INSTALLED AT THE SYSTEM CONTROL PANEL OR OTHER APPROVED LOCATION.
- THE DOCUMENTATION CABINET SHALL BE PROMINENTLY LABELED, "SYSTEM RECORD DOCUMENTS".
- ALL RECORD AND TESTING DOCUMENTATION SHALL BE STORED IN THE CABINET.
- CONTENTS SHALL BE ACCESSIBLE BY AUTHORIZED PERSONNEL ONLY.
- WHERE CABINET IS INSTALLED IN A LOCATION OTHER THAN THE SYSTEM CONTROL UNIT, ITS LOCATION SHALL BE IDENTIFIED AT THE SYSTEM CONTROL UNIT.

SYSTEM DOCUMENTS AS APPLICABLE:

- RECORD DRAWINGS/AS-BUILTS.
- EQUIPMENT CUT SHEETS AND CA SFM LISTINGS.
- ALTERNATIVE MEANS AND METHODS.
- PERFORMANCE BASED DESIGN DOCUMENTATION (NFPA 72, 7.3.7).
- SYSTEM RECORD OF COMPLETION AND ANY SUPPLEMENTAL INSPECTION AND TESTING DOCUMENTATION (NFPA 72, 7.8.2).
- EMERGENCY RESPONSE PLAN (NFPA 72, 7.3.8.).
- EVALUATION DOCUMENTATION (NFPA 72, 7.3.9.).
- RISK ANALYSIS DOCUMENTATION (NFPA 72, 7.3.6).
- SOFTWARE AND FIRMWARE CONTROL DOCUMENTATION (NFPA 72, 23.2.2).

rrm design group
rrmdesign.com | (805) 543-1794
3765 SOUTH HIGUERA STREET, SUITE 102
SAN LUIS OBISPO, CA 93401

THE INCLUDED DRAWINGS, SPECIFICATIONS, IDEAS, DESIGNS AND ARRANGEMENTS REPRESENTED THEREBY ARE AND SHALL REMAIN THE PROPERTY OF RRM DESIGN GROUP AND NO PART THEREOF SHALL BE COPIED, DISCLOSED TO OTHERS OR USED IN CONNECTION WITH ANY WORK OR PROJECT OTHER THAN THE SPECIFIED PROJECT FOR WHICH THEY HAVE BEEN PREPARED AND DEVELOPED WITHOUT THE WRITTEN CONSENT OF RRM DESIGN GROUP. VISUAL CONTACT WITH THESE DRAWINGS OR SPECIFICATIONS SHALL CONSTITUTE CONCLUSIVE EVIDENCE OF ACCEPTANCE OF THESE RESTRICTIONS. SUBMITTAL OF THESE DOCUMENTS FOR PUBLIC AGENCY REVIEW SHALL NOT BE CONSIDERED A WAIVER OF RRM DESIGN GROUP'S RIGHTS.
RRM DESIGN GROUP COPYRIGHT 2023
RRM IS A CALIFORNIA CORPORATION

CONSULTANT

AGENCY

100% CD SET
NOT FOR CONSTRUCTION

FOURTH ST COMMUNITY CENTER AND PARK

HENDERSON AVE., PORTERVILLE, CA 93257

FIRE ALARM SPECIFICATIONS, CODES AND NOTES

NO.	REVISION	DATE
1	PLAN CHECK REVISION 1	5/17/24
2	PLAN CHECK REVISION 2	9/12/24

PROJECT MANAGER: JJ
DRAWN BY: CM
CHECKED BY: JJ
DATE: 2024.01.15
PROJECT NUMBER: 2883-01-RC22
SHEET: E401

PLAN CHECK REVISION 2

Rose Sing Eastham & Associates
Electrical Consultants
131 S. Dunworth – (559)733-2671
Visalia, California 93292-6705

REGISTERED PROFESSIONAL ENGINEER
STEVEN KIRK EASTHAM
No. E 18786
Exp. 6/30/25
ELECTRICAL
STATE OF CALIFORNIA

Z:\Drafting\Jobs\RSE\City of Porterville\Fourth Street Community Center & Park\E401.dwg DATE SAVED: 05/29/24 BY: Hhood DATE PLOTTED: 09/19/24 JOB #: 22-173-JJ

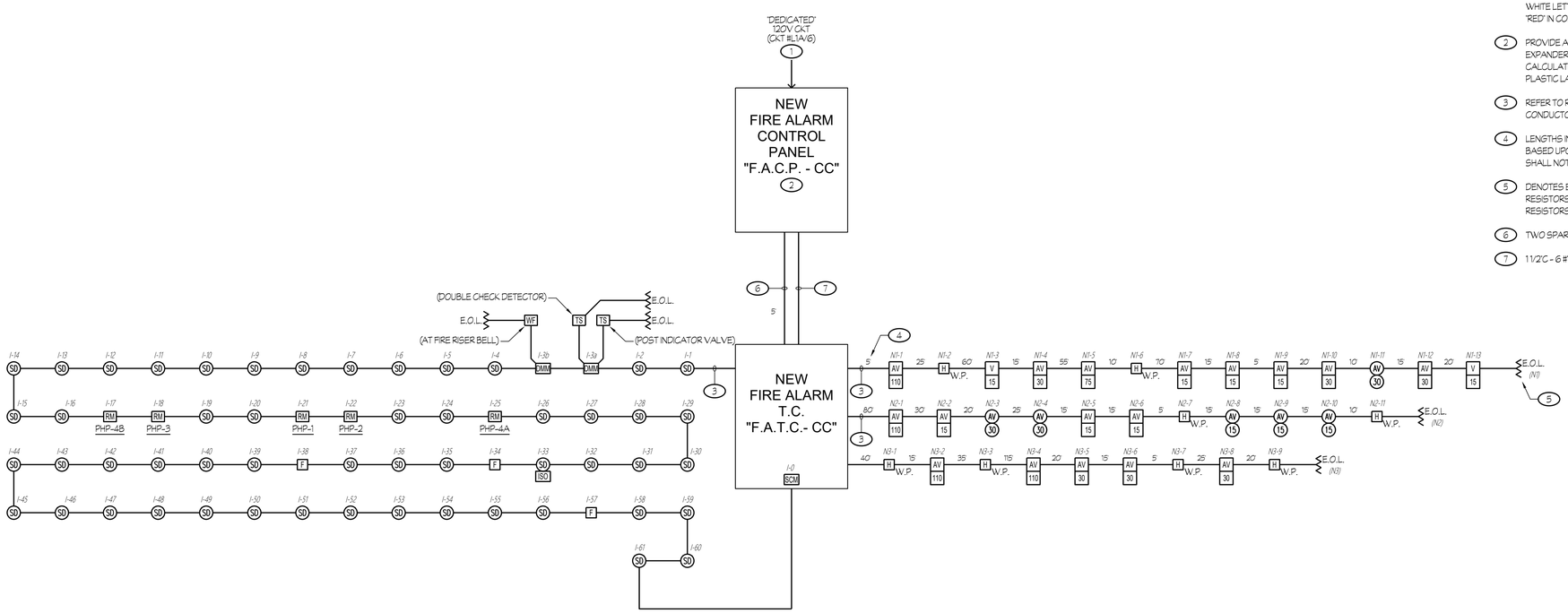

1 FIRE ALARM SYSTEM RISER DIAGRAM

NTS

NOTES (THIS SHEET ONLY):

1. CIRCUIT BREAKER SHALL BE EQUIPPED WITH A LOCK-ON ACCESSORY. PROVIDE AN ENGRAVED NAMEPLATE: 'FIRE ALARM - LEAVE ON'. NAMEPLATE SHALL HAVE WHITE LETTERS ON A RED BACKGROUND. PAINT HANDLE OR LOCK-ON ACCESSORY 'RED' IN COLOR.
2. PROVIDE A COPY OF THE BATTERY CALCULATION FOR THE 'RESPECTIVE' POWER EXPANDER PANEL (OR THE FIRE ALARM CONTROL PANEL "F.A.C.P."). THE BATTERY CALCULATION SHALL CONTAIN INFORMATION (AS NOTED ON THESE PLANS) AND BE PLASTIC LAMINATED. MOUNT ONTO INSIDE FACE OF PANEL DOOR.
3. REFER TO RESPECTIVE FIRE ALARM PLAN FOR CONDUIT AND CABLING/ CONDUCTOR REQUIREMENTS, TYPICAL.
4. LENGTHS INDICATED WERE USED FOR CALCULATIONS/DESIGN PURPOSES ONLY AND BASED UPON THE 'DIAGRAMMATIC' LAYOUT SHOWN ON THE DRAWINGS. LENGTHS SHALL NOT BE USED FOR BIDDING.
5. DENOTES END OF LINE RESISTOR ON NOTIFICATION APPLIANCE CIRCUIT. RESISTORS SUPPLIED WITH CONTROL/EXPANDER PANELS AS REQUIRED. LOCATE RESISTORS AT END OF LINE APPLIANCES (CLASS 'B' WIRING), TYPICAL.
6. TWO SPARE 1 1/4"C.
7. 1 1/2"C - 6 #12 (SIGNALING), 6 #14, ONE 'FA' CABLE.

VOLTAGE DROP CALCULATIONS (OHM'S LAW)

VOLTAGE DROP = 2 (DC RESISTANCE AT 75°C FROM TABLE 8, C.E.C.) (LENGTH OF CIRCUIT / 1000) (CURRENT / 1)

PERCENT VOLTAGE DROP = VOLTAGE DROP / NOMINAL VOLTAGE x 100

1. NOTIFICATION APPLIANCE CIRCUIT "N1":

V 15 : 2 x 0.066 A = 0.132 A

AV 15 : 3 x 0.079 A = 0.237 A

AV 30 : 3 x 0.107 A = 0.321 A

AV 75 : 1 x 0.176 A = 0.176 A

AV 110 : 1 x 0.212 A = 0.212 A

AV 30 : 1 x 0.107 A = 0.107 A

H : 2 x 0.069 A = 0.138 A / 1.323 A
W.P.

VOLTAGE DROP = 2 (1.98) (325 / 1000) (1.323) = 1.703 V.D.

PERCENT VOLTAGE DROP = 1.703 / 24 x 100 = 7.1 %

VOLTAGE DROP CALCULATIONS (OHM'S LAW)

VOLTAGE DROP = 2 (DC RESISTANCE AT 75°C FROM TABLE 8, C.E.C.) (LENGTH OF CIRCUIT / 1000) (CURRENT / 1)

PERCENT VOLTAGE DROP = VOLTAGE DROP / NOMINAL VOLTAGE x 100

2. NOTIFICATION APPLIANCE CIRCUIT "N2":

AV 15 : 3 x 0.079 A = 0.237 A

AV 110 : 1 x 0.212 A = 0.212 A

AV 15 : 3 x 0.079 A = 0.237 A

AV 30 : 2 x 0.107 A = 0.214 A

H : 2 x 0.069 A = 0.138 A / 1.038 A
W.P.

VOLTAGE DROP = 2 (1.98) (245 / 1000) (1.038) = 1.01 V.D.

PERCENT VOLTAGE DROP = 1.01 / 24 x 100 = 4.21 %

VOLTAGE DROP CALCULATIONS (OHM'S LAW)

VOLTAGE DROP = 2 (DC RESISTANCE AT 75°C FROM TABLE 8, C.E.C.) (LENGTH OF CIRCUIT / 1000) (CURRENT / 1)

PERCENT VOLTAGE DROP = VOLTAGE DROP / NOMINAL VOLTAGE x 100

3. NOTIFICATION APPLIANCE CIRCUIT "N3":

AV 30 : 3 x 0.107 A = 0.321 A

AV 110 : 2 x 0.212 A = 0.424 A

H : 4 x 0.069 A = 0.276 A / 1.021 A
W.P.

VOLTAGE DROP = 2 (1.98) (290 / 1000) (1.021) = 1.173 V.D.

PERCENT VOLTAGE DROP = 1.173 / 24 x 100 = 4.89 %

NEW FIRE ALARM CONTROL PANEL "F.A.C.P. - CC" BATTERY CALCULATION

DESCRIPTION	QUANTITY	SUPV. CURRENT EACH	SUPV. CURRENT SUB-TOTAL	ALARM CURRENT EACH	ALARM CURRENT SUB-TOTAL
FIRE ALARM CONTROL PANEL	1	0.336	0.336	0.409	0.409
PULL STATION	3	0.0003	0.0009	0.0015	0.0045
SMOKE DETECTOR	52	0.0003	0.0156	0.0065	0.338
DUAL MONITOR MODULE	2	0.0075	0.015	0.0057	0.0114
RELAY MODULE	5	0.0003	0.0015	0.0003	0.0015
SUPERVISED CONTROL MODULE	1	0.0003	0.0003	0.0003	0.0003
15cd STROBE	2	—	—	0.066	0.132
HORN/15cd STROBE	9	—	—	0.079	0.711
HORN/30cd STROBE	9	—	—	0.107	0.963
HORN/75cd STROBE	1	—	—	0.176	0.176
HORN/110cd STROBE	4	—	—	0.212	0.848
EXTERIOR HORN	8	—	—	0.069	0.552
	TOTALS		0.3693		3.1837

TOTAL ALARM CURRENT OF 3.1837 x 0.084 (5 MINUTES) = 0.267 A.H.
TOTAL SUPERVISORY CURRENT OF 0.3693 x 24 HOURS = 8.8632 A.H.
TOTAL AMP HOURS REQUIRED 9.1302 A.H.
x 1.25 SAFETY FACTOR
11.413 A.H.

PROVIDE 18.0 AMP HOUR BATTERIES.

Rose Sing Eastham & Associates
Electrical Consultants
131 S. Dunworth ~ (559)733-2671
Visalia, California 93292-6705

REGISTERED PROFESSIONAL ENGINEER
JEFFREY KIRK EASTHAM
No. 15876
Exp. 6/30/25
ELECTRICAL
STATE OF CALIFORNIA

rrm design group
rrmdesign.com | (805) 543-1794
3765 SOUTH HIGUERA STREET, SUITE 102
SAN LUIS OBISPO, CA 93401

THE INCLUDED DRAWINGS, SPECIFICATIONS, IDEAS, DESIGNS AND ARRANGEMENTS REPRESENTED THEREBY ARE AND SHALL REMAIN THE PROPERTY OF RRM DESIGN GROUP AND NO PART THEREOF SHALL BE COPIED, DISCLOSED TO OTHERS OR EXHIBITED WITHOUT THE WRITTEN CONSENT OF RRM DESIGN GROUP, FOR ANY PURPOSE OTHER THAN THE PROJECT FOR WHICH THEY HAVE BEEN PREPARED AND DEVELOPED. WITHOUT THE WRITTEN CONSENT OF RRM DESIGN GROUP, VISUAL CONTACT WITH THESE DRAWINGS OR SPECIFICATIONS SHALL CONSTITUTE DISCLAIMER EVIDENCE OF ACCEPTANCE OF THESE RESTRICTIONS. THE SALE OF A COPY OF THIS DOCUMENT IN ANY FORM SHALL NOT BE CONSIDERED A WAIVER OF RRM DESIGN GROUP'S RIGHTS.
RRM DESIGN GROUP COPYRIGHT 2023
RRM IS A CALIFORNIA CORPORATION

CONSULTANT

AGENCY

100% CD SET
NOT FOR CONSTRUCTION

FOURTH ST COMMUNITY CENTER AND PARK

HENDERSON AVE., PORTERVILLE, CA 93257

FIRE ALARM SYSTEM RISER DIAGRAM AND CALCULATIONS

NO.	REVISION	DATE
1	PLAN CHECK REVISION 1	5/17/24
2	PLAN CHECK REVISION 2	9/12/24

PLAN CHECK REVISION 2

PROJECT MANAGER: JJ
DRAWN BY: CM
CHECKED BY: JJ
DATE: 2024.01.15
PROJECT NUMBER: 2883-01-RC22
SHEET: E402

Z:\Drafting\Jobs\2883\City of Porterville\Fourth Street Community Center & Park\E402.dwg DATE SAVED: 05/29/24 BY: Hood DATE PLOTTED: 09/19/24 JOB # 22-173-JJ

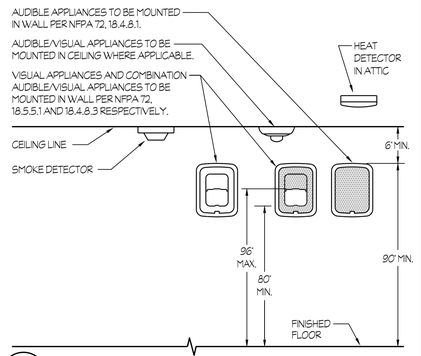

1 FIRE ALARM DEVICES ELEVATION

NTS

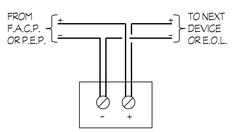

STROBE OR SPEAKER

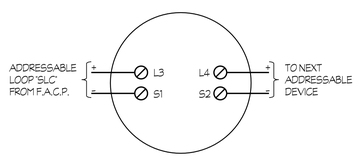

SMOKE OR HEAT DETECTOR

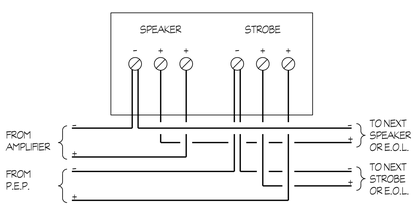

SPEAKER/STROBE

2 FIRE ALARM SYSTEM WIRING DIAGRAMS

NTS

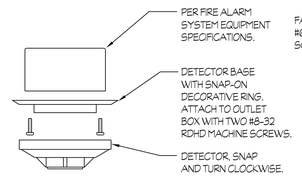

ADDRESSABLE SMOKE OR HEAT DETECTOR

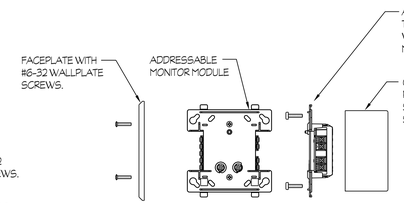

ADDRESSABLE MONITOR MODULE
(SIMILAR MOUNTING FOR ADDRESSABLE DUAL MONITOR, SUPERVISED OUTPUT, AND RELAY CONTROL MODULES)

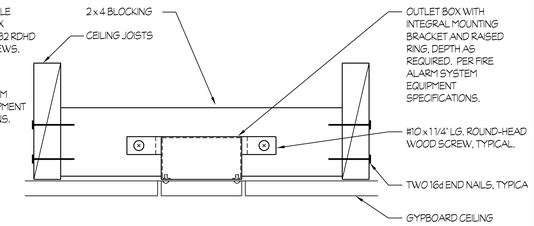

OUTLET BOX MOUNTING AT CEILING JOIST
(SIMILAR MOUNTING FOR OUTLET BOX BETWEEN WOOD STUDS)

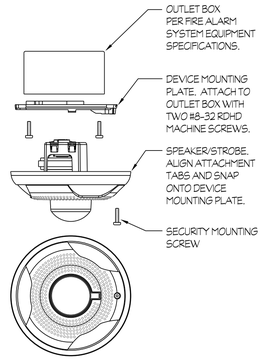

CEILING SPEAKER/STROBE

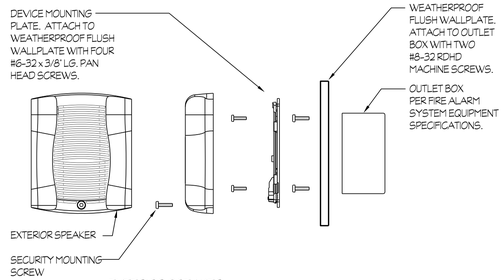

EXTERIOR SPEAKER
(WITH WEATHERPROOF FLUSH WALLPLATE 'WTP')

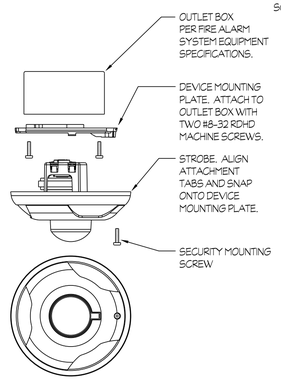

CEILING STROBE

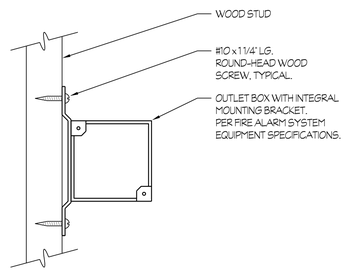

OUTLET BOX MOUNTING ONTO WOOD STUD
(SIMILAR MOUNTING FOR OUTLET BOX AT CEILING JOISTS)

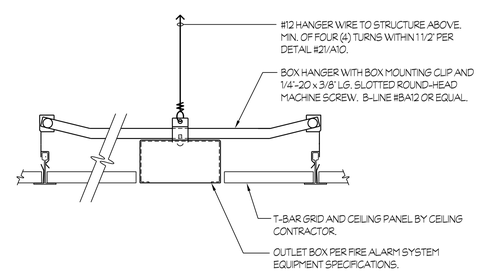

OUTLET BOX MOUNTING AT SUSPENDED T-BAR CEILING

4 FIRE ALARM DEVICES MOUNTING

NTS

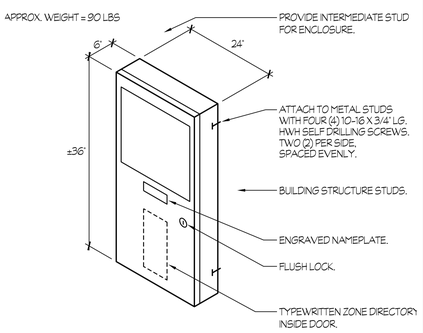

3 FIRE ALARM CONTROL PANEL "F.A.C.P. - CC" MOUNTING

NTS

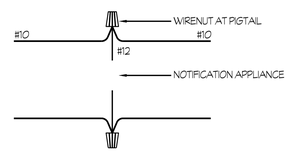

INCORRECT METHOD - DEVICE UNSUPERVISED

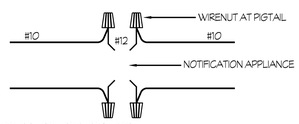

CORRECT METHOD - DEVICE SUPERVISED

5 PIGTAIL WIRING DETAIL

NTS

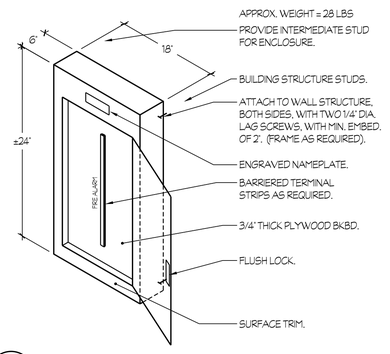

6 FIRE ALARM T.C. "F.A.T.C. - CC" MOUNTING

NTS

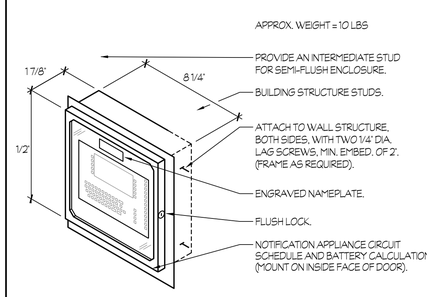

7 FIRE ALARM REMOTE ANNUNCIATOR MOUNTING

NTS

Rose Sing Eastham & Associates
Electrical Consultants
131 S. Dunworth -- (559)733-2671
Visalia, California 93292-6705

PROFESSIONAL ENGINEER — ROSE SING KIRK EASTHAM — No. E4778 — Exp. 6/30/25 — ELECTRICAL — STATE OF CALIFORNIA

rrm design group
rrmdesign.com | (805) 543-1794
3765 SOUTH HIGUERA STREET, SUITE 102
SAN LUIS OBISPO, CA 93401

THE INCLUDED DRAWINGS, SPECIFICATIONS, IDEAS, DESIGNS AND ARRANGEMENTS REPRESENTED THEREBY ARE AND SHALL REMAIN THE PROPERTY OF RRM DESIGN GROUP AND NO PART THEREOF SHALL BE COPIED, DISCLOSED TO OTHERS OR SUBSTANTIALLY USED WITHOUT THE WRITTEN CONSENT OF RRM DESIGN GROUP, FOR ANY PROJECT FOR WHICH THEY HAVE BEEN PREPARED AND DEVELOPED, WITHOUT THE WRITTEN CONSENT OF RRM DESIGN GROUP. VISUAL CONTACT WITH THESE DRAWINGS OR SPECIFICATIONS SHALL CONSTITUTE DISCLAIMER EVIDENCE OF ACCEPTANCE OF THESE RESTRICTIONS. THE SALE OF THESE DRAWINGS OR SPECIFICATIONS SHALL NOT BE CONSIDERED A WAIVER OF RRM DESIGN GROUP'S RIGHTS.
RRM DESIGN GROUP COPYRIGHT 2023
RRM IS A CALIFORNIA CORPORATION

CONSULTANT

AGENCY

100% CD SET
NOT FOR CONSTRUCTION

FOURTH ST COMMUNITY CENTER AND PARK
HENDERSON AVE., PORTERVILLE, CA 93257

FIRE ALARM DETAILS

NO.	REVISION	DATE
1	PLAN CHECK REVISION 1	5/17/24
2	PLAN CHECK REVISION 2	9/12/24

PLAN CHECK REVISION 2

PROJECT MANAGER: JJ
DRAWN BY: CM
CHECKED BY: JJ
DATE: 2024.01.15
PROJECT NUMBER: 2883-01-RC22
SHEET: E403

Z:\Porting\Jobs\RSE\City of Porterville\Fourth Street Community Center & Park\E403.dwg DATE: SAVED: 05/29/24 BY: Hood DATE PLOTTED: 09/19/24 JOB # 22-173-JJ

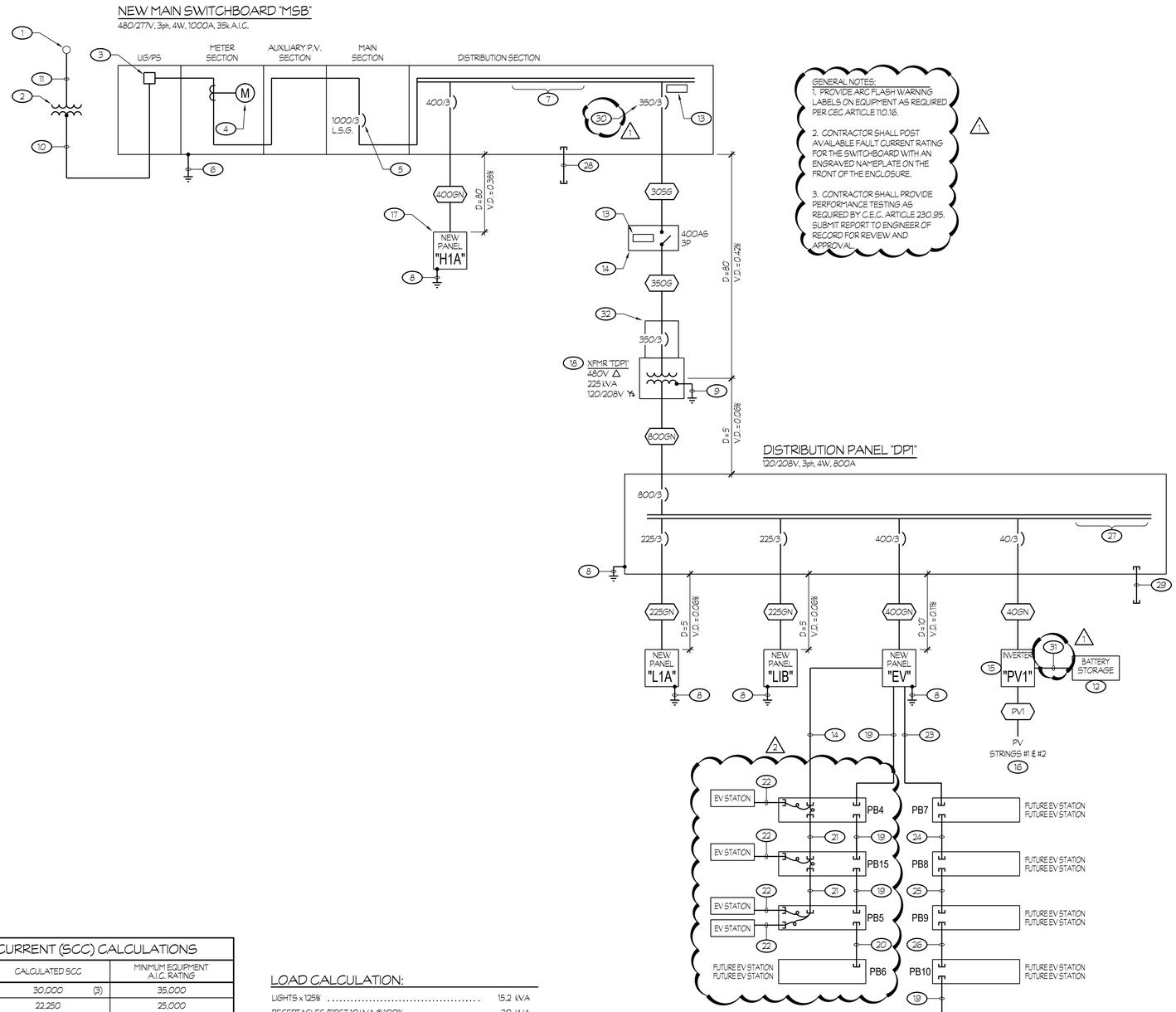

GENERAL NOTES:
1. PROVIDE ARC FLASH WARNING LABELS ON EQUIPMENT AS REQUIRED PER CEC ARTICLE 110.16.

2. CONTRACTOR SHALL POST AVAILABLE FAULT CURRENT RATING FOR THE SWITCHBOARD WITH AN ENGRAVED NAMEPLATE ON THE FRONT OF THE ENCLOSURE.

3. CONTRACTOR SHALL PROVIDE PERFORMANCE TESTING AS REQUIRED BY C.E.C. ARTICLE 230.95. SUBMIT REPORT TO ENGINEER OF RECORD FOR REVIEW AND APPROVAL.

ONE LINE DIAGRAM NOTES (THIS SHEET ONLY):

1. EXISTING S.C.E. POWER POLE. VERIFY EXACT LOCATION AND RISER QUADRANT WITH S.C.E. PRIOR TO ROUGH-IN.
2. PROVIDE A 10' x 12' CONCRETE TRANSFORMER PAD, GROUNDING AND BARRIER POSTS PER S.C.E. REQUIREMENTS.
3. PROVIDE LANDING LUGS PER S.C.E. REQUIREMENTS.
4. PROVIDE METERING FACILITIES PER S.C.E. REQUIREMENTS.
5. MAIN CIRCUIT BREAKER SHALL BE 100% RATED ELECTRONIC TYPE, EQUIPPED WITH LONG-TIME, SHORT-TIME, INSTANTANEOUS-OFF TYPE AND GROUND FAULT TYPE CONFIGURATIONS. MAIN CIRCUIT BREAKER SHALL ALSO BE EQUIPPED WITH A TRIP INDICATOR AND LOCAL CURRENT METER. SQUARE D #RK SERIES OR EQUAL.
6. 1 #3/0 TO GROUNDING ELECTRODE SYSTEM PER DETAIL #6/E503.
7. PROVIDE SPACE AND MOUNTING HARDWARE FOR A MINIMUM OF TWO 400/3 AND TWO 225/3 CIRCUIT BREAKERS.
8. BOND AND GROUND REMOTE PANEL PER DETAIL #6/E503.
9. BOND AND GROUND TRANSFORMER PER DETAIL #6/E503.
10. FOUR 4"C (S.C.E. "SECONDARY") PER S.C.E. REQUIREMENTS.
11. ONE 5"C (S.C.E. "PRIMARY") PER S.C.E. REQUIREMENTS.
12. PROVIDE EG4 ELECTRONICS 15 kWh BATTERY STORAGE SYSTEM. CONNECT TO SYSTEM PER MANUFACTURER REQUIREMENTS. (1)
13. PROVIDE SOLAR NAME PLATE AS REQUIRED BY C.E.C.. SEE SHEET #E505 FOR ADDITIONAL INFORMATION.
14. 1"C - 8 #8 + 1 #10 GND.
15. PROVIDE SOL-ARC HYBRID INVERTER #15K-2P-N. CONNECT PV STRING CIRCUITS PER MANUFACTURER REQUIREMENTS. (1)
16. PROVIDE 415W PV MODULES AS MANUFACTUERED BY Q CELLS, MODEL Q.PEAK DUO ML-G10+ AND SOL-ARK OPTIMIZER #0900-80V AT EACH UNIT. REFER TO PLANS FOR QUANTITY AND LOCATION OF MODULES. (1)
17. PROVIDE AN ENGRAVED NAMEPLATE THAT READS: SERVICE DISCONNECT 1 OF 2.
18. PROVIDE AN ENGRAVED NAMEPLATE THAT READS: SERVICE DISCONNECT 2 OF 2.
19. TWO 1 1/4"C SPARES (WITH NYLON PULL ROPE) FOR FUTURE E.V. CHARGING STATIONS.
20. 1 1/4"C SPARE (WITH NYLON PULL ROPE) FOR FUTURE E.V. CHARGING STATION.
21. 1"C - 4 #8 + 1 #10 GND.
22. 1"C - 2 #8 + 1 #10 GND.
23. SIX SPARE 1 1/4"C (WITH NYLON PULL ROPE).
24. FIVE SPARE 1 1/4"C (WITH NYLON PULL ROPE).
25. FOUR SPARE 1 1/4"C (WITH NYLON PULL ROPE).
26. THREE SPARE 1 1/4"C (WITH NYLON PULL ROPE).
27. PROVIDE SPACE AND MOUNTING HARDWARE FOR A MINIMUM OF TWO 225/3 CIRCUIT BREAKERS MINIMUM.
28. TWO SPARE 4"C AND TWO 2 1/2"C.
29. TWO SPARE 3"C.
30. PV BREAKER PLACED IN LAST POSITION, FARTHEST FROM MAIN BREAKER.
31. 1 1/2"C - 4 #3/0 + 1 #CAT. "5e" CABLE. (1)
32. PRIMARY CIRCUIT BREAKER IN NEMA 3R ENCLOSURE.

SHORT CIRCUIT CURRENT (SCC) CALCULATIONS

DESIGNATION	CALCULATED SCC	MINIMUM EQUIPMENT A.I.C. RATING
MAIN SWITCHBOARD "MSB"	30,000 (3)	35,000
PANEL "H1A"	22,250	25,000
DISTRIBUTION PANEL "DP1"	10,697	22,000
PANEL "L1A"	10,354	22,000
PANEL "L1B"	10,354	22,000
PANEL "EV"	10,263	22,000

(1) SERIES RATINGS MAY BE USED TO ACHEVE THE REQUIRED MINIMUM EQUIPMENT A.I.C. RATING. PROVIDE AN ENGRAVED NAMEPLATE WHICH INDICATES THIS APPLICATION TO COMPLY WITH C.E.C. ARTICLES 110.22(C), 240.83(C) AND 240.86(B).

(2) THE SHORT CIRCUIT CURRENT CALCULATIONS AND MINIMUM EQUIPMENT A.I.C. RATINGS ARE "PRELIMINARY" AND ARE FOR BIDDING PURPOSES ONLY. THE SHORT CIRCUIT AND PROTECTIVE DEVICE COORDINATION STUDY, REQUIRED BY THE PROJECT MANUAL, WILL DETERMINE THE ACTUAL SHORT CIRCUIT CURRENT VALUES.

(3) THE AVAILABLE FAULT CURRENT SHALL BE LEGIBLY MARKED IN THE FIELD WITH THE MAXIMUM AVAILABLE FAULT CURRENT TO COMPLY WITH C.E.C. ARTICLE 110.24. THE FIELD MARKING SHALL INCLUDE THE DATE THAT THE FAULT CURRENT CALCULATION WAS PERFORMED. THE LABEL SHALL BE PRINTED IN COLOR AND ON SELF-ADHESIVE NYLON OR VINYL DIE CUT STOCK.

LOAD CALCULATION:

LIGHTS x 125%	15.2 kVA
RECEPTACLES (FIRST 10 kVA @ 100% REMAINDER @ 50%)	20 kVA
H.V.A.C. x 125%	294 kVA
MISCELLANEOUS x 100%	22.1 kVA
(2) E.V. STATIONS	14.4 kVA
(15) E.V. STATIONS (FUTURE)	108 kVA
TOTAL	473.7 kVA
AT 480/277V 3ph 4W	571 AMPS

THEREFORE THE 1000 AMP SERVICE IS ADEQUATE.

NEW FEEDER SCHEDULE:

(ALL CONDUCTORS IN 480V OR 480/277V UNDERGROUND FEEDERS SHALL BE CU-XHHW-2. ALL OTHER CONDUCTORS , INCLUDING THE EQUIPMENT GROUNDING CONDUCTOR, SHALL BE CU-THWN-2 FOR #8 AWG OR LARGER AND CU-THWN FOR #10 AWG OR SMALLER).

40GN	1"C - 4 #8 + 1 #10 GND.
225GN	2 1/2"C - 4 #4/0 + 1 #4 GND.
350G	3"C - 3 #350 kcmil + 1 #2 GND.
400GN	3 1/2"C - 4 #500 kcmil + 1 #2 GND.
800GN	TWO 3 1/2"C - 4 #500 kcmil + 1 #1/0 GND EACH.

1 ONE LINE DIAGRAM

NTS

rrm design group
rrmdesign.com | (805) 543-1794
3765 SOUTH HIGUERA STREET, SUITE 102
SAN LUIS OBISPO, CA 93401

THE INCLUDED DRAWINGS, SPECIFICATIONS, IDEAS, DESIGNS AND ARRANGEMENTS REPRESENTED THEREBY ARE AND SHALL REMAIN THE PROPERTY OF RRM DESIGN GROUP AND NO PART THEREOF SHALL BE COPIED, DISCLOSED TO OTHERS OR EXHIBITED WITHOUT THE WRITTEN CONSENT OF RRM DESIGN GROUP, FOR ANY PURPOSE NOT THE PROJECT FOR WHICH THEY HAVE BEEN PREPARED AND DEVELOPED. WITHOUT THE WRITTEN CONSENT OF RRM DESIGN GROUP, VISUAL CONTACT WITH THESE DRAWINGS OR SPECIFICATIONS SHALL CONSTITUTE DISCLAIMER EVIDENCE OF ACCEPTANCE OF THESE RESTRICTIONS. THE SALE OF THE FIRST SET OF DRAWINGS PRODUCED BY RRM SHALL NOT BE CONSIDERED A WAIVER OF RRM DESIGN GROUP'S RIGHTS.
RRM DESIGN GROUP COPYRIGHT 2023
RRM IS A CALIFORNIA CORPORATION

CONSULTANT

AGENCY

100% CD SET
NOT FOR CONSTRUCTION

FOURTH ST COMMUNITY CENTER AND PARK
HENDERSON AVE., PORTERVILLE, CA 93257

ONE LINE DIAGRAM

NO.	REVISION	DATE
1	PLAN CHECK REVISION 1	5/17/24
2	PLAN CHECK REVISION 2	9/12/24
△		
△		
△		
△		

PLAN CHECK REVISION 2

PROJECT MANAGER: JJ
DRAWN BY: CM
CHECKED BY: JJ
DATE: 2024.01.15
PROJECT NUMBER: 2883-01-RC22
SHEET: E501

Rose Sing Eastham & Associates
Electrical Consultants
131 S. Dunworth ~ (559)733-2671
Visalia, California 93292-6705

REGISTERED PROFESSIONAL ENGINEER KIRK EASTHAM No. 15876 Exp. 6/30/25 ELECTRICAL STATE OF CALIFORNIA

Z:\Darling\Jobs\RSE\City of Porterville\Fourth Street Community Center & Park\E501.dwg DATE SAVED: 08/22/24 BY: Corey DATE PLOTTED: 09/19/24 JOB #: 22-173-JJ

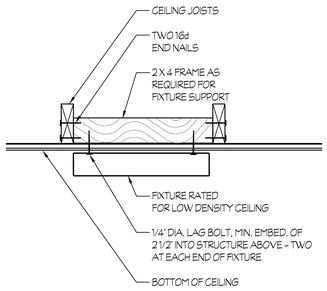

1 SURFACE FIXTURE MOUNTING

NTS

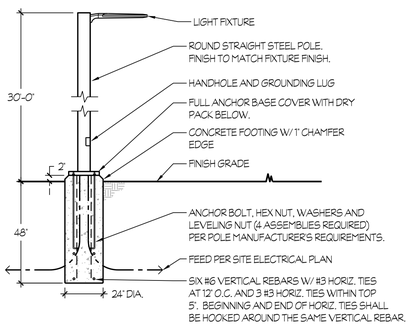

2 POLE LIGHT MOUNTING

NTS

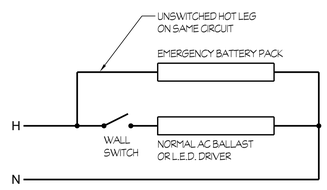

CONNECT LIGHT FIXTURE SO THAT THE L.E.D. DRIVER (OR ALL OF THE LAMPS) ARE CONTROLLED BY THE WALL SWITCH AND THE L.E.D. DRIVER (OR LAMPS) CONNECTED TO THE EMERGENCY BATTERY PACK WILL OPERATE DURING NORMAL POWER OUTAGE REGARDLESS OF THE POSITION OF THE WALL SWITCH.

3 EMERGENCY BATTERY PACK WIRING DIAGRAM

NTS

WIRE LEGEND	
B	LINE VOLTAGE
E	15-24 VDC POWER

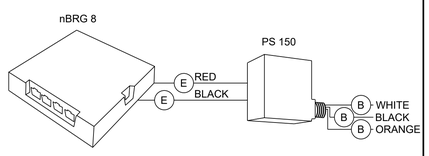

4 NETWORK INTERFACE BRIDGE KIT

(WIRING DIAGRAM)

NTS

NOTE: PROVIDE BLANK WALL PLATE.

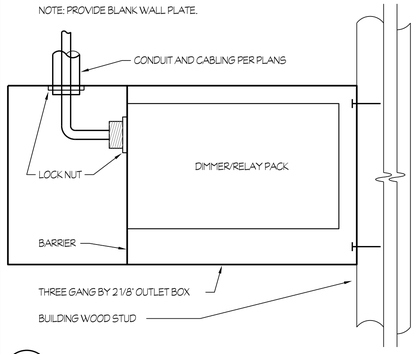

5 DIMMER/RELAY PACK MOUNTING

NTS

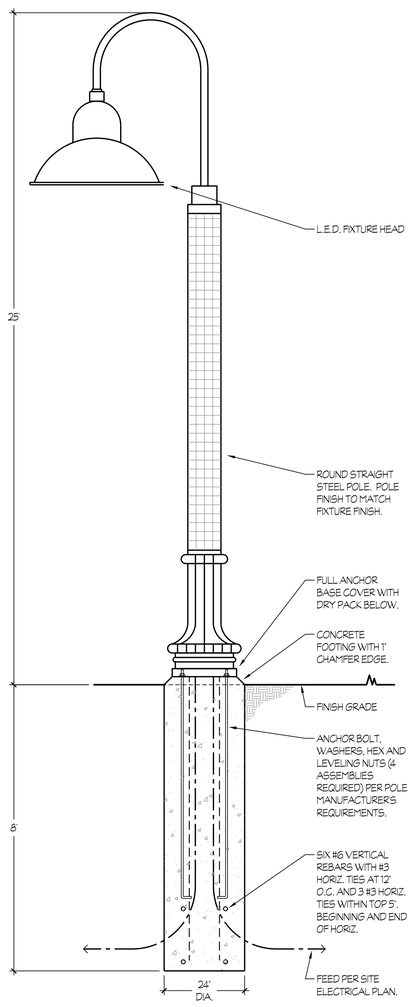

6 FIXTURES "S1" MOUNTING

NTS

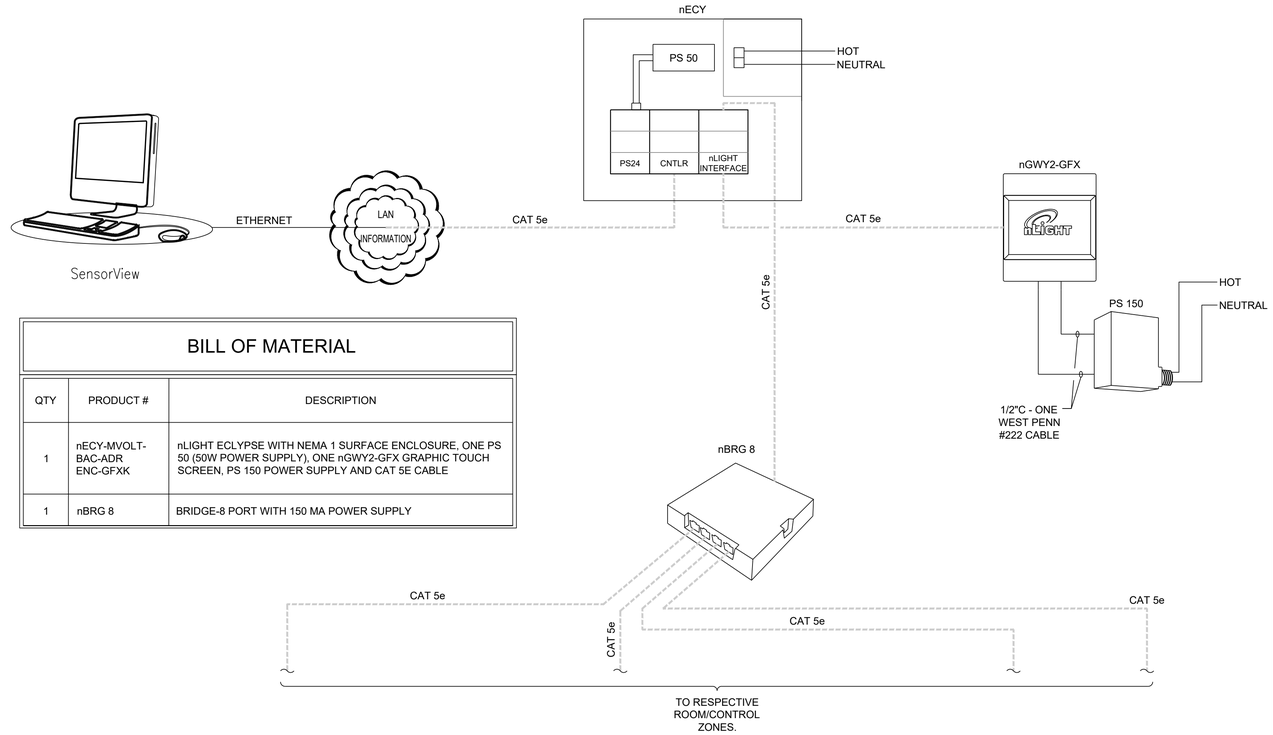

BILL OF MATERIAL

QTY	PRODUCT #	DESCRIPTION
1	nECY-MVOLT-BAC-ADR ENC-GFXK	nLIGHT ECLYPSE WITH NEMA 1 SURFACE ENCLOSURE, ONE PS 50 (50W POWER SUPPLY), ONE nGWY2-GFX GRAPHIC TOUCH SCREEN, PS 150 POWER SUPPLY AND CAT 5E CABLE
1	nBRG 8	BRIDGE-8 PORT WITH 150 MA POWER SUPPLY

7 AUTOMATED DEMAND RESPONSE CLIENT INTERFACE AND NETWORK INTERFACE CONTROLLER

(WIRING DIAGRAM)

NTS

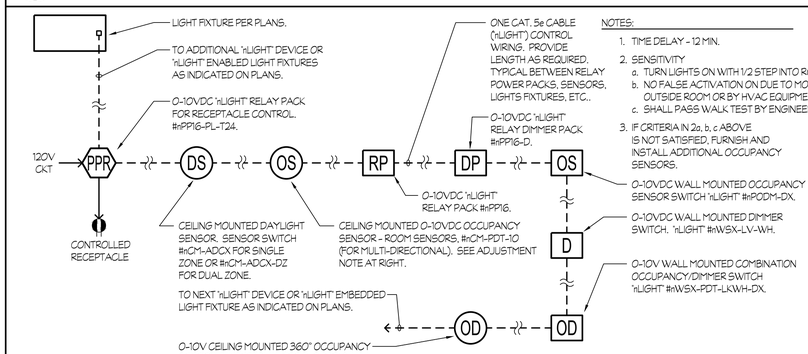

NOTES:

1. TIME DELAY - 12 MIN.
2. SENSITIVITY
   a. TURN LIGHTS ON WITH 1/2 STEP INTO ROOM.
   b. NO FALSE ACTIVATION ON DUE TO MOTION OUTSIDE ROOM OR BY HVAC EQUIPMENT.
   c. SHALL PASS WALK TEST BY ENGINEER.
3. IF CRITERIA IN 2a, b, c ABOVE IS NOT SATISFIED, FURNISH AND INSTALL ADDITIONAL OCCUPANCY SENSORS.

8 SENSOR SWITCH, "nLIGHT" DEVICES WIRING DIAGRAM

(NOTE: ACTUAL SEQUENCE OF DEVICES IS TO BE PER PLANS)

NTS

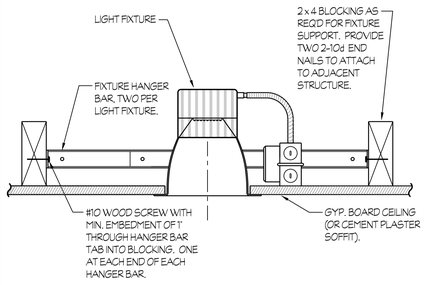

11 RECESSED DOWNLIGHT MOUNTING

NTS

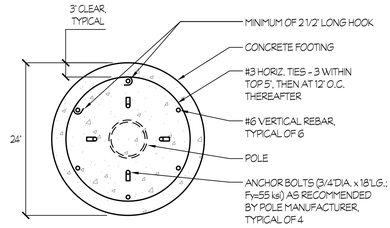

9 CROSS SECTION OF CONCRETE FOOTING

NTS

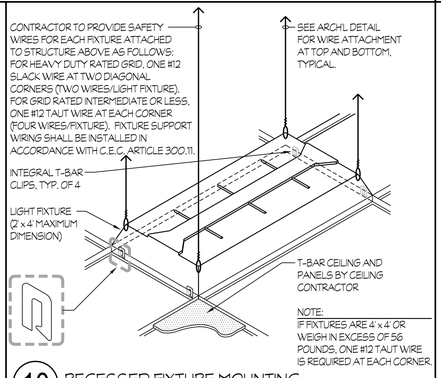

NOTE:
IF FIXTURES ARE 4' x 4' OR WEIGH IN EXCESS OF 56 POUNDS, ONE #12 TAUT WIRE IS REQUIRED AT EACH CORNER.

10 RECESSED FIXTURE MOUNTING

NTS

Rose Sing Eastham & Associates
Electrical Consultants
131 S. Dunworth ~ (559)733-2671
Visalia, California 93292-6705

REGISTERED PROFESSIONAL ENGINEER
JACKSON KIRK EASTHAM
Exp. 6/30/25
ELECTRICAL
STATE OF CALIFORNIA

rrm design group
rrmdesign.com | (805) 543-1794
3765 SOUTH HIGUERA STREET, SUITE 102
SAN LUIS OBISPO, CA 93401

THE INCLUDED DRAWINGS, SPECIFICATIONS, IDEAS, DESIGNS AND ARRANGEMENTS REPRESENTED THEREBY ARE AND SHALL REMAIN THE PROPERTY OF RRM DESIGN GROUP AND NO PART THEREOF SHALL BE COPIED, DISCLOSED TO OTHERS OR USED IN CONNECTION WITH ANY WORK OR PROJECT OTHER THAN THE SPECIFIED PROJECT FOR WHICH THEY HAVE BEEN PREPARED AND DEVELOPED WITHOUT THE WRITTEN CONSENT OF RRM DESIGN GROUP. VISUAL CONTACT WITH these DRAWINGS OR SPECIFICATIONS SHALL CONSTITUTE DISCLAIMER EVIDENCE OF ACCEPTANCE OF THESE RESTRICTIONS. SHOULD DISCLOSURE OF THESE DOCUMENTS OCCUR, IT SHALL NOT BE CONSIDERED A WAIVER OF RRM DESIGN GROUP'S RIGHTS.
RRM DESIGN GROUP COPYRIGHT 2023
RRM IS A CALIFORNIA CORPORATION

CONSULTANT

AGENCY

100% CD SET
NOT FOR CONSTRUCTION

FOURTH ST COMMUNITY CENTER AND PARK

HENDERSON AVE., PORTERVILLE, CA 93257

DETAILS

NO.	REVISION	DATE
1	PLAN CHECK REVISION 1	5/17/24
2	PLAN CHECK REVISION 2	9/12/24
△		
△		
△		
△		

PLAN CHECK REVISION 2

PROJECT MANAGER: JJ
DRAWN BY: CM
CHECKED BY: JJ
DATE: 2024.01.15
PROJECT NUMBER: 2883-01-RC22
SHEET: E502

Z:\Porterville\Jobs\RSE\City of Porterville\Fourth Street Community Center & Park\E502.dwg DATE SAVED: 01/15/24 BY: Casey DATE PLOTTED: 09/19/24 JOB #: 22-173-JJ

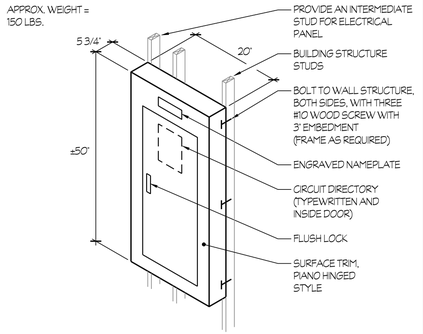

1 SURFACE MOUNTED PANEL

NTS

PULL BOX	PB1-PB3, PB13, PB14	PB4-PB12, PB15	.	.
W	13 1/4'	17	.	.
L	24'	30'	.	.

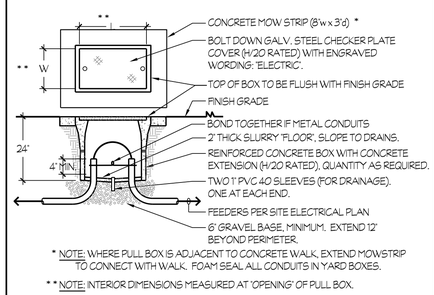

* NOTE: WHERE PULL BOX IS ADJACENT TO CONCRETE WALK, EXTEND MOWSTRIP TO CONNECT WITH WALK. FOAM SEAL ALL CONDUITS IN YARD BOXES.

* * NOTE: INTERIOR DIMENSIONS MEASURED AT 'OPENING' OF PULL BOX.

4 PULL BOX MOUNTING

NTS

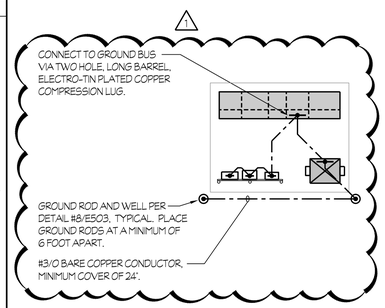

7 MAIN SWBD "MSB", PV INVERTERS, BATTERY STORAGE & XFMR - GROUNDING & BONDING

NTS

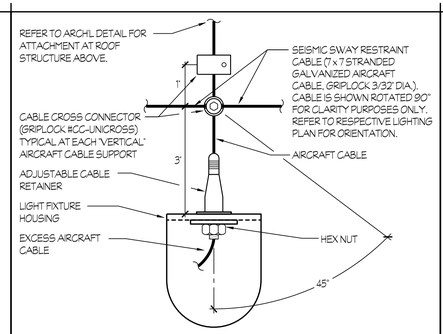

CONNECTION AT LIGHT FIXTURE SUPPORT (ELEVATION)

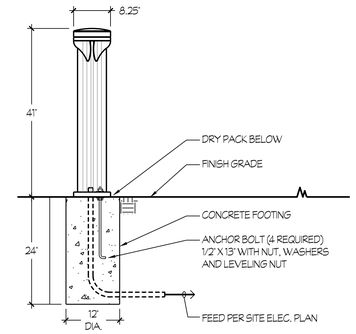

11 BOLLARD FIXTURE MOUNTING

NTS

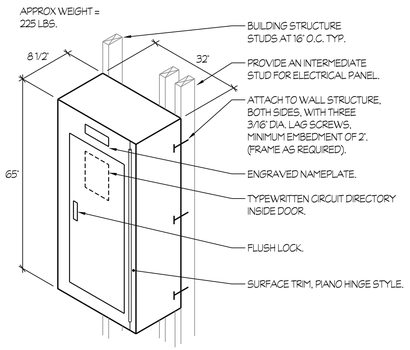

2 DISTRIBUTION PANEL MOUNTING

NTS

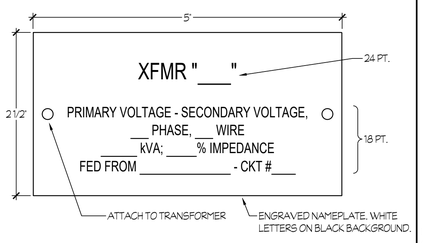

5 XFMR IDENTIFICATION

NTS

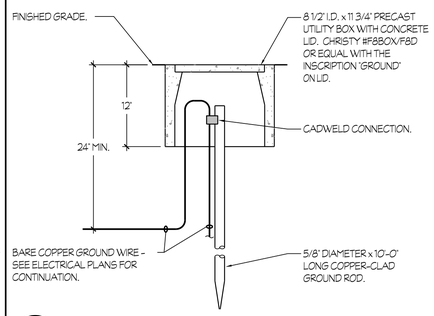

8 GROUND WELL DETAIL

NTS

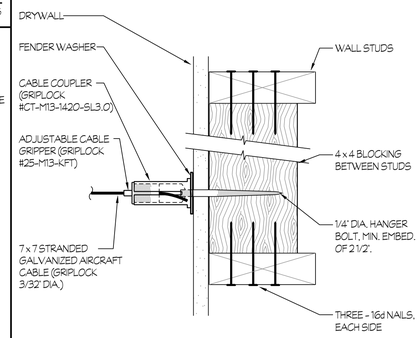

CONNECTION AT STUD WALL (PLAN VIEW)

9 SEISMIC SWAY RESTRAINT

NTS

NOTES (DETAIL #10 ONLY):

(A) ROUTE CIRCUIT THROUGH LIGHTING CONTROL PANEL 'LCP'.

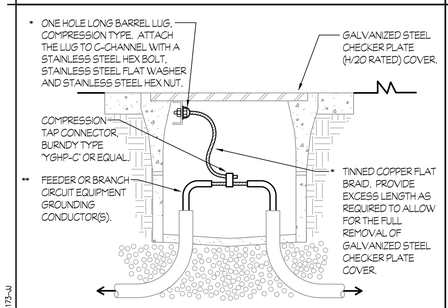

* THIS TYPICAL WORK SHALL BE PROVIDED FOR EACH SECTION OF A MULTIPLE SECTION COVER.

** THIS TYPICAL WORK SHALL BE DONE FOR EACH OF THE LARGEST FEEDER (OR BRANCH CIRCUIT) EQUIPMENT GROUNDING CONDUCTOR, PASSING THRU THE RESPECTIVE PULL BOX, WHICH ORIGINATE FROM SEPARATE SOURCES/VOLTAGES.

MATRIX FOR TINNED COPPER FLAT BRAID

SIZE OF EQUIPMENT GROUNDING CONDUCTOR (a)	ALPHA WIRE PART #	OLYMPIC WIRE AND CABLE PART #
#8	1233	708
#6	1235	710
#4	1239	710
#2 THRU #1/0	1240	713
#2/0 THRU #4/0	1241	714

(a) CONTAINED IN THE LARGEST FEEDER (OR BRANCH CIRCUIT) PASSING THRU THE RESPECTIVE PULL BOX.

3 GROUNDING AND BONDING OF STEEL CHECKER PLATE COVERS

NTS

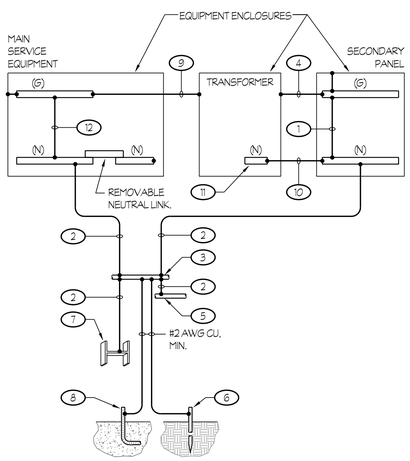

NOTES (THIS DETAIL ONLY):

1. SYSTEM BONDING JUMPER PER C.E.C. 250.30 (1).
2. FULL SIZE GROUNDING ELECTRODE CONDUCTOR PER C.E.C., TABLE 250.66.
3. METAL WATER PIPING PER C.E.C. 250.104.
4. SUPPLY SIDE BONDING JUMPER PER C.E.C. 250.30 (A), (2).
5. OTHER ABOVEGROUND METALLIC PIPING SYSTEMS PER C.E.C. 250.104.
6. 5/8" DIA. ROD ELECTRODE PER C.E.C. 250.52 (A), (5).
7. BUILDING STRUCTURAL STEEL PER C.E.C. 250.104.
8. CONCRETE ENCASED ELECTRODE PER C.E.C. 250.52 (A), (3).
9. EQUIPMENT GROUND CONDUCTOR PER C.E.C., TABLE 250.122.
10. NEUTRAL CONDUCTOR PER FEEDER SCHEDULE.
11. NEUTRAL BAR.
12. MAIN BONDING JUMPER PER C.E.C. 250.28.

LEGEND:

(G) DENOTES THE GROUND BUS OR BAR.

(N) DENOTES THE NEUTRAL BUS OR BAR.

GENERAL NOTE:

ALL MATERIALS AND METHODS USED IN GROUNDING AND BONDING SHALL COMPLY WITH C.E.C. ARTICLE 250.

6 MAIN SERVICE EQUIPMENT, XFMR AND SECONDARY PANEL - GROUNDING AND BONDING

NTS

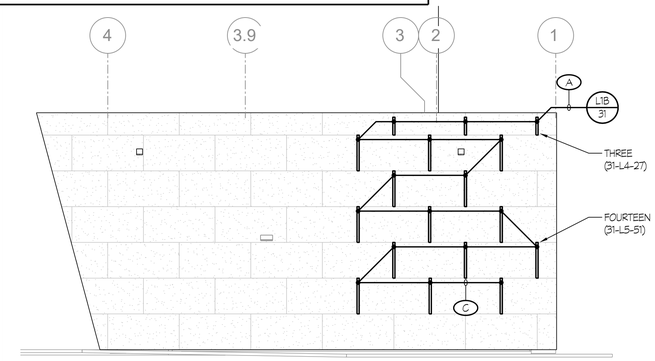

NORTH ELEVATION

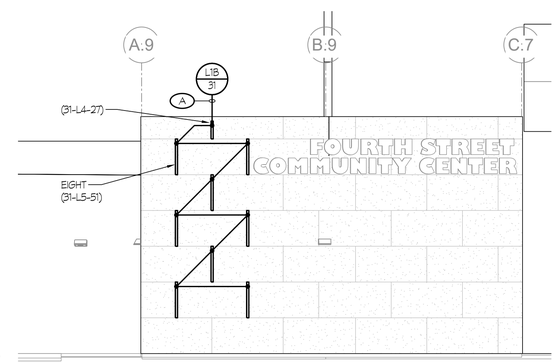

EAST ELEVATION

10 L.E.D. WALL LIGHT LOCATIONS AND CONNECTIONS

NTS

Rose Sing Eastham & Associates
Electrical Consultants
131 S. Dunworth ~ (559)733-2671
Visalia, California 93292-6705

REGISTERED PROFESSIONAL ENGINEER
JEFFREY KIRK EASTHAM
No. 15876
Exp. 6/30/25
ELECTRICAL
STATE OF CALIFORNIA

rrm design group

rrmdesign.com | (805) 543-1794
3765 SOUTH HIGUERA STREET, SUITE 102
SAN LUIS OBISPO, CA 93401

THE INCLUDED DRAWINGS, SPECIFICATIONS, IDEAS, DESIGNS AND ARRANGEMENTS REPRESENTED THEREBY ARE AND SHALL REMAIN THE PROPERTY OF RRM DESIGN GROUP AND NO PART THEREOF SHALL BE COPIED, DISCLOSED TO OTHERS OR SUBSTANTIALLY USED WITHOUT THE WRITTEN CONSENT OF RRM DESIGN GROUP, FOR ANY PROJECT FOR WHICH THEY HAVE BEEN PREPARED AND DEVELOPED, WITHOUT THE WRITTEN CONSENT OF RRM DESIGN GROUP. VISUAL CONTACT WITH THESE DRAWINGS OR SPECIFICATIONS SHALL CONSTITUTE DISCLAIMER EVIDENCE OF ACCEPTANCE OF THESE RESTRICTIONS. THE SALE OF A PRINTED OR ELECTRONIC COPY OF THIS DOCUMENT SHALL NOT BE CONSIDERED A WAIVER OF RRM DESIGN GROUP'S RIGHTS.
RRM DESIGN GROUP COPYRIGHT 2023
RRM IS A CALIFORNIA CORPORATION

CONSULTANT

AGENCY

100% CD SET
NOT FOR CONSTRUCTION

FOURTH ST COMMUNITY CENTER AND PARK
HENDERSON AVE., PORTERVILLE, CA 93257

DETAILS

NO.	REVISION	DATE
1	PLAN CHECK REVISION 1	5/17/24
2	PLAN CHECK REVISION 2	9/12/24
△		
△		
△		
△		

PROJECT MANAGER: JJ
DRAWN BY: CM
CHECKED BY: JJ
DATE: 2024.01.15
PROJECT NUMBER: 2883-01-RC22
SHEET: E503

PLAN CHECK REVISION 2

Z:\Darling\Jobs\9SEQ\Jy of Porterville\Fourth Street Community Center & Park\E503.dwg DATE SAVED: 08/22/24 BY: Corey DATE PLOTTED: 09/19/24 JOB #: 22-173-JJ

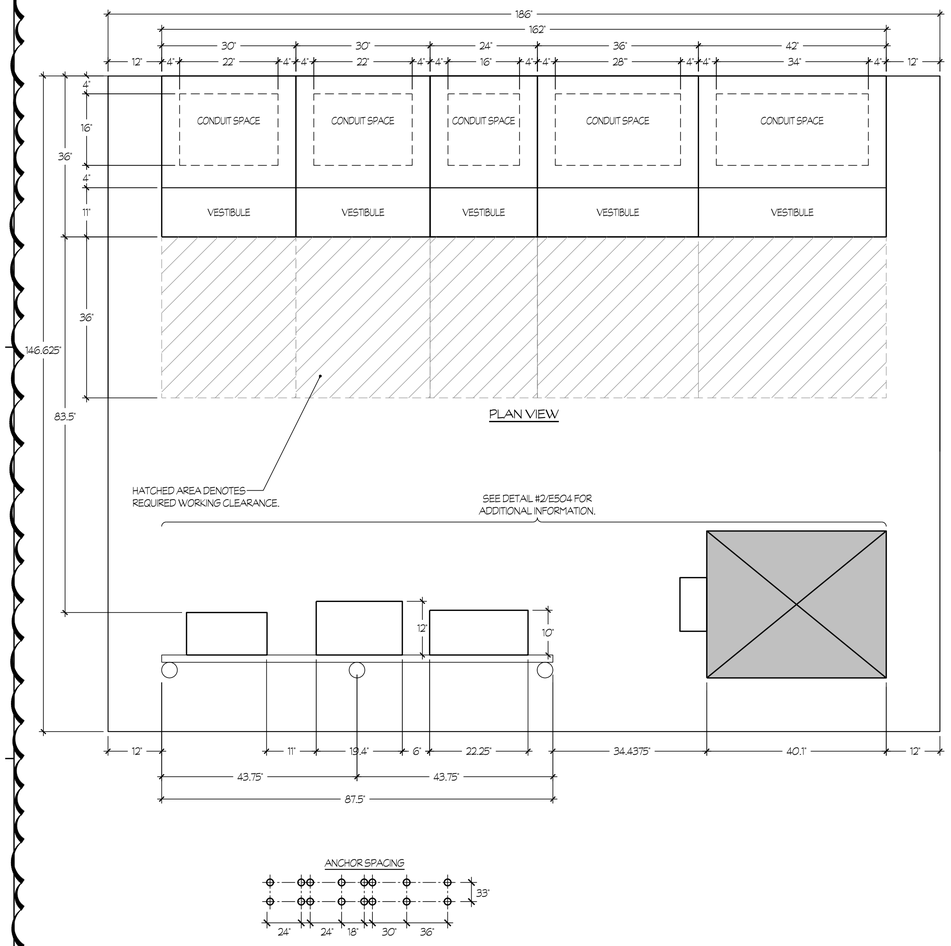

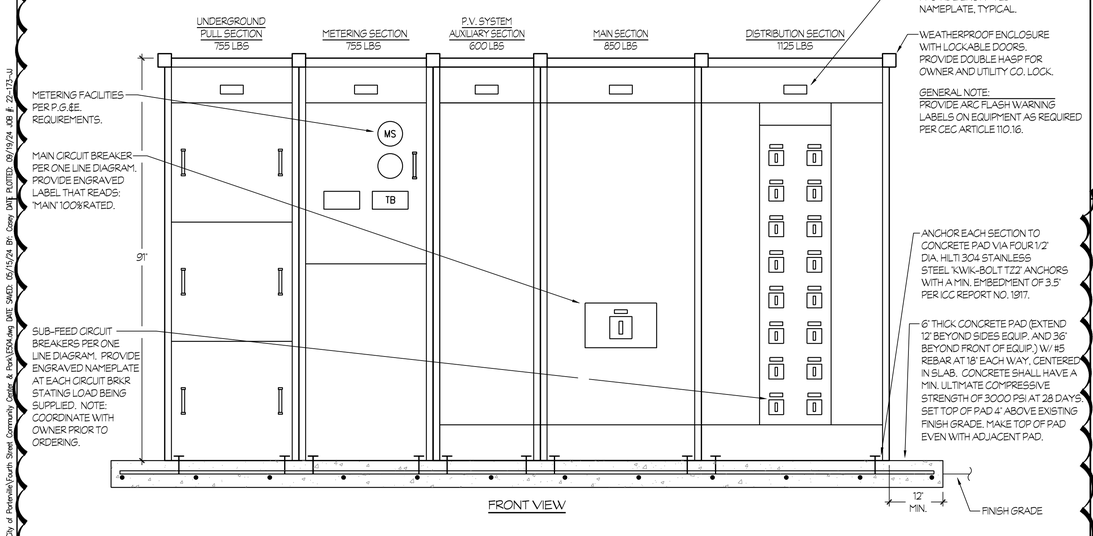

FRONT VIEW

1 MAIN SWICHBOARD "MSB" MOUNTING

NTS

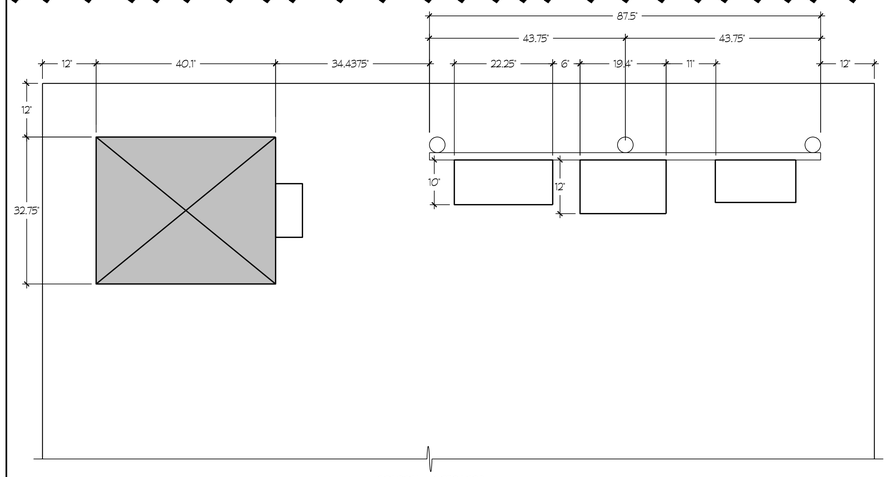

PLAN VIEW

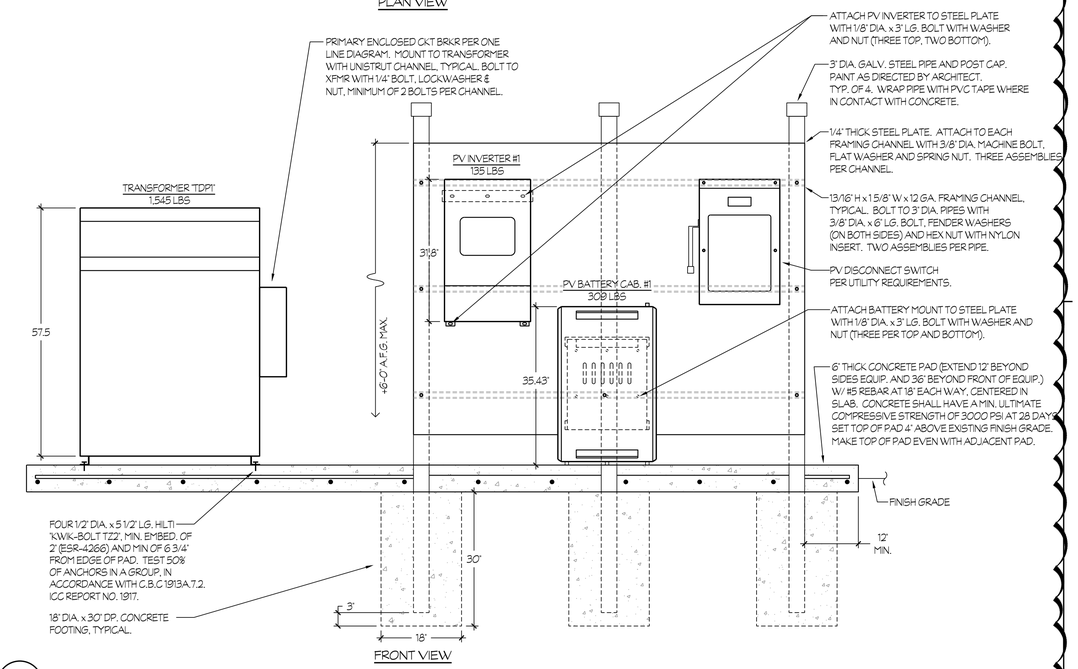

FRONT VIEW

2 PV DISCONNECT, PV INVERTER PV BATTERY AND TRANSFORMER "TDP1" MOUNTING

NTS

1

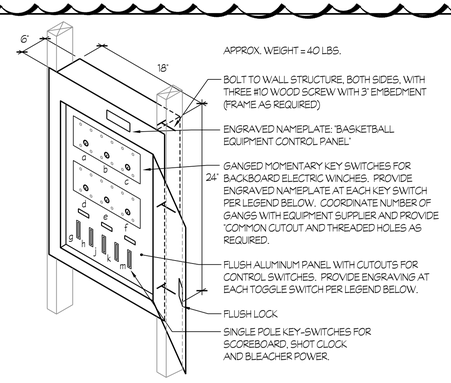

NOTE:
CONTRACTOR SHALL LEAVE ADDITIONAL CONDUCTORS INSIDE ENCLOSURE FOR SERVICING. CONDUCTORS SHALL BE BUNDLED NEATLY, PLACED IN SPIRAL WRAP AND ATTACHED TO BACK OF ENCLOSURE.

LEGEND	
a	MAIN COURT LIGHTS - WEST
b	MAIN COURT LIGHTS - EAST
c	WEST SIDE COURT LIGHTS - NORTH
d	WEST SIDE COURT LIGHTS - SOUTH
e	EAST SIDE COURT LIGHTS - NORTH
f	EAST SIDE COURT LIGHTS - SOUTH
g	SCOREBOARD
h	SHOT CLOCKS
j	BLEACHER NORTH
k	BLEACHER CENTER
m	BLEACHER SOUTH

3 GYM EQUIPMENT CONTROL PANEL

NTS

Rose Sing Eastham & Associates
Electrical Consultants
131 S. Dunworth -- (559)733-2671
Visalia, California 93292-6705

REGISTERED PROFESSIONAL ENGINEER KIRK EASTHAM No. E4778 Exp. 6/30/25 ELECTRICAL STATE OF CALIFORNIA

rrm design group
rrmdesign.com | (805) 543-1794
3765 SOUTH HIGUERA STREET, SUITE 102
SAN LUIS OBISPO, CA 93401

THE INCLUDED DRAWINGS, SPECIFICATIONS, IDEAS, DESIGNS AND ARRANGEMENTS REPRESENTED THEREBY ARE AND SHALL REMAIN THE PROPERTY OF RRM DESIGN GROUP AND NO PART THEREOF SHALL BE COPIED, DISCLOSED TO OTHERS OR EXHIBITED WITHOUT THE WRITTEN CONSENT OF RRM DESIGN GROUP, FOR ANY PURPOSE NOT THE PROJECT FOR WHICH THEY HAVE BEEN PREPARED AND DEVELOPED, WITHOUT THE WRITTEN CONSENT OF RRM DESIGN GROUP. VISUAL CONTACT WITH THESE DRAWINGS OR SPECIFICATIONS SHALL CONSTITUTE DISCLAIMER EVIDENCE OF ACCEPTANCE OF THESE RESTRICTIONS. THE SALE OF THE FIRST CONSTRUCTED PROJECT SHALL NOT SHALL NOT BE CONSIDERED A WAIVER OF RRM DESIGN GROUP'S RIGHTS.
RRM DESIGN GROUP COPYRIGHT 2023
RRM IS A CALIFORNIA CORPORATION

CONSULTANT

AGENCY

100% CD SET
NOT FOR CONSTRUCTION

FOURTH ST COMMUNITY CENTER AND PARK

HENDERSON AVE., PORTERVILLE, CA 93257

DETAILS

NO.	REVISION	DATE
1	PLAN CHECK REVISION 1	5/17/24
2	PLAN CHECK REVISION 2	9/12/24

PLAN CHECK REVISION 2

PROJECT MANAGER: JJ
DRAWN BY: CM
CHECKED BY: JJ
DATE: 2024.01.15
PROJECT NUMBER: 2883-01-RC22
SHEET: E504

Z:\Porterville\Jobs\2883\City of Porterville\Fourth Street Community Center & Park\E504.dwg DATE SAVED: 05/15/24 BY: Corey DATE PLOTTED: 09/19/24 JOB # 22-172-JJ

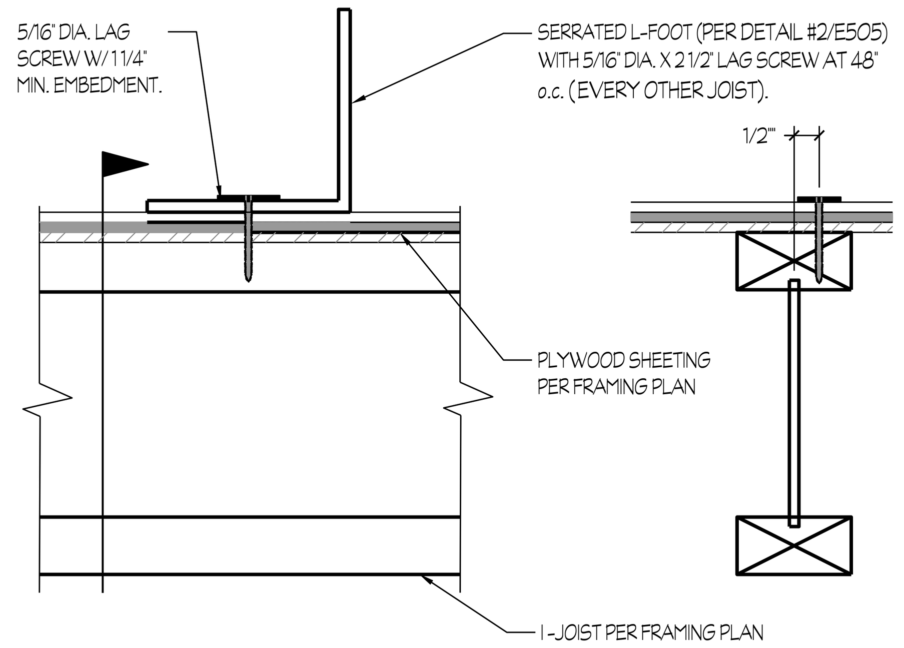

1 SOLAR ATTACHMENT - L FOOT

FOR WOOD FRAME ROOF — NTS

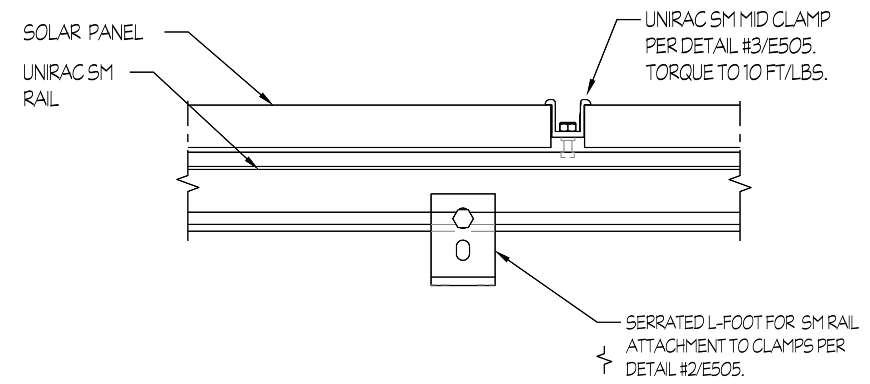

4 SOLAR PANEL MOUNT - SIDE

FOR WOOD FRAME ROOF — NTS

ALL COMPONENTS TO BE 304 STAINLESS STEEL.

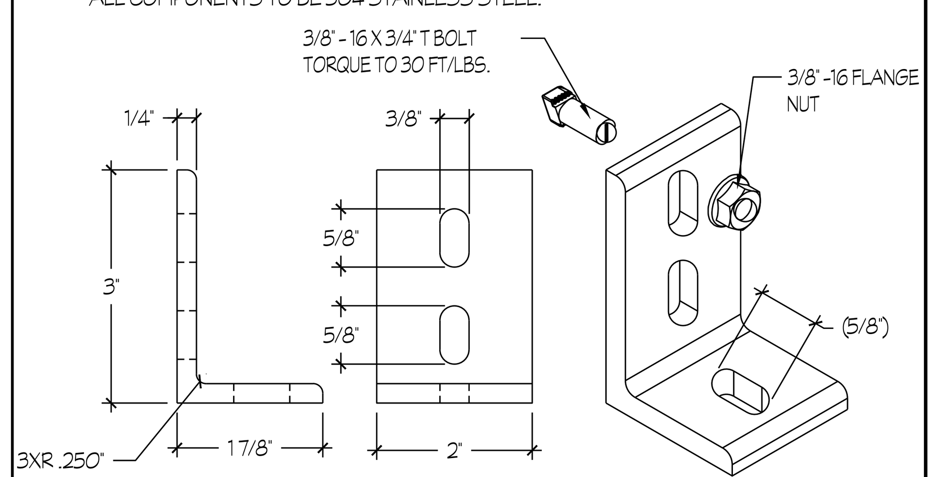

PART # TABLE	
P/N	DESCRIPTION
304001C	L-FOOT SERR W/ T-BOLT CLR

2 SERRATED L-FOOT DETAIL

NTS

CEC 690.13 (B) & 706.15 (C)
PLACE THIS LABEL ON ***ALL*** DISCONNECTING MEANS WHERE ENERGIZED IN AN OPEN POSITION

WARNING
ELECTRIC SHOCK HAZARD
DO NOT TOUCH TERMINALS
TERMINALS ON BOTH THE LINE AND LOAD SIDE MAY BE ENERGIZED IN THE OPEN POSITION

CEC 690.53
PLACE THIS LABEL ON ***ALL*** PHOTOVOLTAIC **DC** DISCONNECTING MEANS (ON INVERTER IF INTEGRATED DC DISCONNECTS ***AND*** AT SEPARATE DC DISCONNECT IF APPLICABLE)

PHOTOVOLTAIC SYSTEM DISCONNECT	
RATED MAX POWER POINT CURRENT (IMP):	10.6A
RATED MAX POWER POINT VOLTAGE (VMP):	560V
MAX SYSTEM VOLTAGE (VOC):	600V
SHORT CIRCUIT CURRENT (ISC):	11.1A

CEC 690.54
PLACE THIS LABEL AT "INTERACTIVE POINT OF INTERCONNECTION" (AT MAIN SERVICE PANEL ***AND*** SUBPANEL IF APPLICABLE)

INVERTER "INV-1" INTERACTIVE PHOTOVOLTAIC POWER SOURCE	
RATED AC OUTPUT CURRENT (A):	27.8A
NOMINAL OPERATING AC VOLTAGE (V):	208V, 3-PH

CEC 690.56(C)
PLACE THIS LABEL AT SERVICE EQUIPMENT LOCATION.

SOLAR PV SYSTEM IS EQUIPPED WITH RAPID SHUTDOWN

TURN RAPID SHUTDOWN SWITCH TO THE "OFF" POSITION TO SHUTDOWN PV SYSTEM AND REDUCE SHOCK HAZARD IN ARRAY

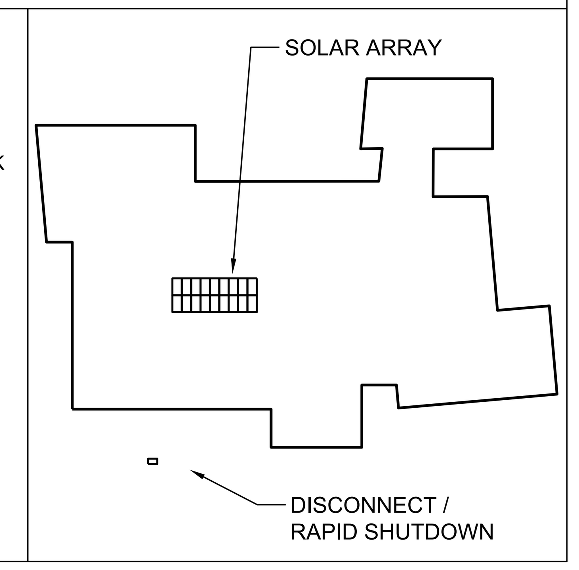

BLACK LETTERING ON YELLOW BACKGROUND

△1

UNIRAC RACKING COMPONENTS

1	RAIL	320168M	SM RAIL 168" MILL	DETAILS #3/E505
2	PRO SERIES END CLAMP	302035M	ENDCLAMP PRO	DETAILS #3/E505
3	PRO SERIES MID CLAMP	302030M	MIDCLAMP PRO - MILL	DETAILS #3/E505
4	STANDOFF	304001C	L -FOOT SERRATED W/T-BOLT, CLR	DETAILS #1/E505

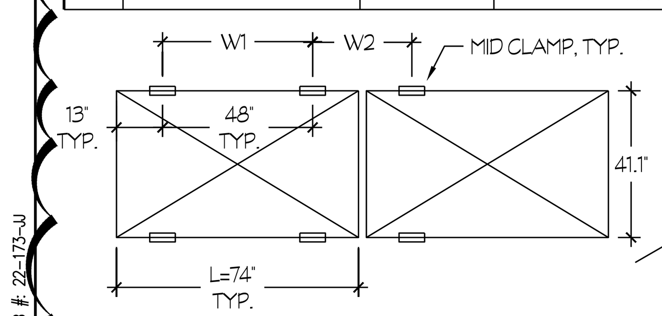

GENERAL NOTES:
1. CANTILEVER LENGTH L2 SHALL NOT BE LONGER THAN L1/3.
2. SOLAR PANEL ATTACHMENT PER DETAIL #4/E505.
3. ALL COMPONANT BOLTS SHALL HAVE A TORQUE VALUE PER THE MANUFACTURER'S SPECIFICATIONS.
4. ALL CLAMPS AND RAILS SHALL BE BARE ALUMINUM.
5. SEE SOLAR PANEL CUT SHEETS ON SHEET #E601 FOR SOLAR PANEL DIMENSIONS.
6. ALL CLAMP BOLTS/NUTS SHALL BE 304 SS.

SOLAR PANEL DIMENSIONS	
WIDTH	41.1"
LENGTH	74.0"
THICKNESS	1.26"
WEIGHT	48.5 LBS.

PANEL LOAD RATING (psf)(1)

	PUSH	PULL
ALLOWABLE	75	55
STRENGTH LEVEL	113	84

(1) BASED ON ONE PANEL AS THE EFFECTIVE AREA.

LEGEND	
(rectangle)	SOLAR PANELS
o	ATTACHMENT POINT
▪	SPLICE
——	RAIL LINES
- - - - -	ROOF STRUCTIRE
DISTRIBUTED DEAD LOAD	2.92 psf
AVERAGE ROOF POINT DEAD LOAD	20.54 psf

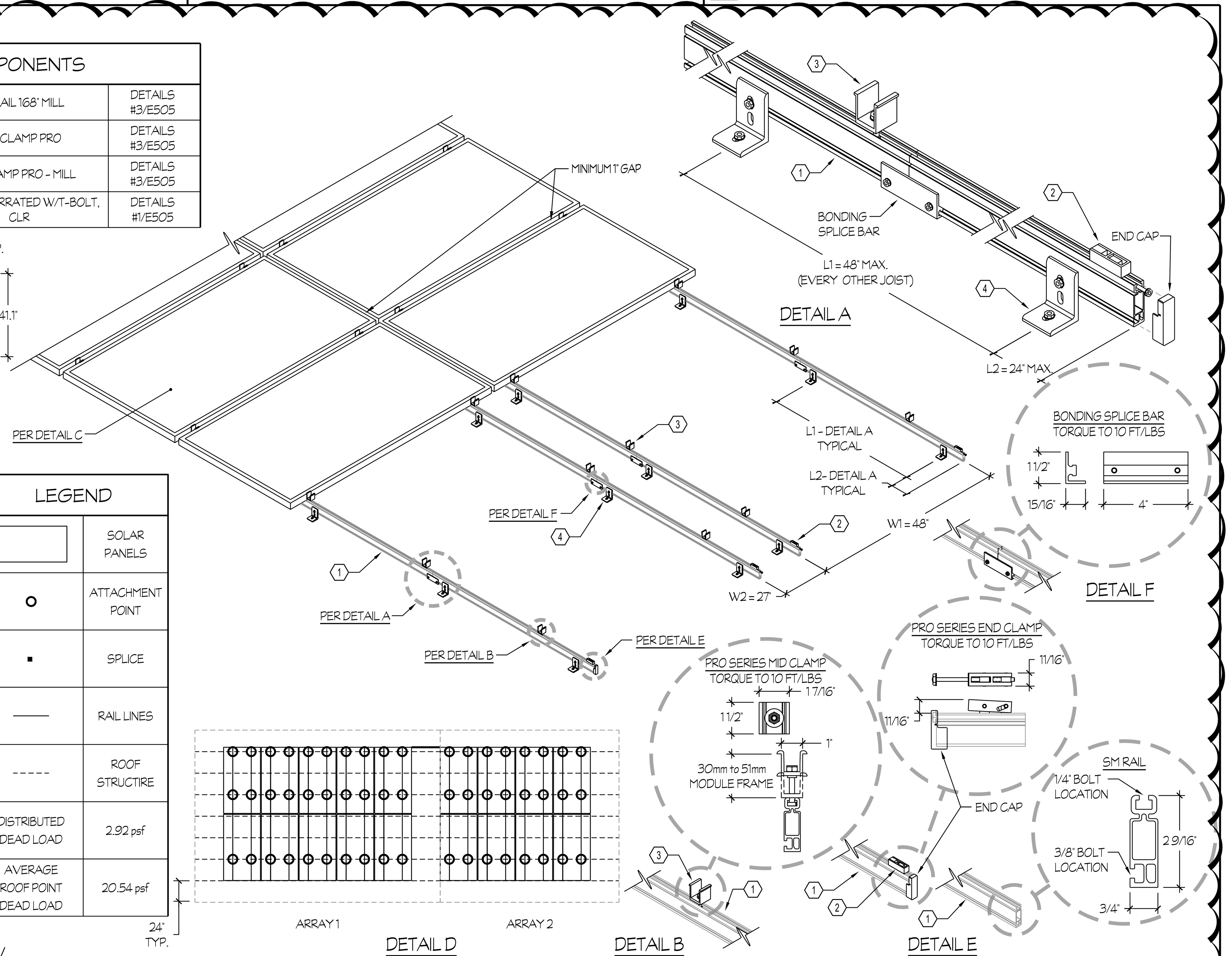

3 ASSEMBLY ISOMETRIC VIEW

NTS

Z:\Drafting\Jobs\RSE\City of Porterville\Fourth Street Community Center & Park\E505.dwg DATE SAVED: 05/15/24 BY: Casey DATE PLOTTED: 09/19/24 JOB #: 22-173-JJ

PHOTOVOLTAIC SOLAR SYSTEMS - GENERAL NOTES

1. THESE DRAWINGS HAVE BEEN PREPARED WITH INFORMATION PROVIDED IN ORIGINAL DESIGN DOCUMENTS AND HAVE NOT BEEN VERIFIED FOR ACCURACY. NEW DESIGN AND REQUIREMENTS WERE BASED ON THE ASSUMPTION OF EXISTING INFORMATION BEING ACCURATE. ANY DISCREPANCIES OR QUESTIONABLE POINTS SHALL BE IMMEDIATELY REPORTED TO THE ENGINEER.
2. ALL ELECTRICAL MATERIALS AND EQUIPMENT SHALL BE NEW AND SHALL BE LISTED BY UNDERWRITER'S LABORATORIES (UL) AND BEAR THEIR LABEL, OR LISTED AND CERTIFIED BY A NATIONALLY RECOGNIZED TESTING AUTHORITY. ALL LIKE EQUIPMENT, MATERIAL, FIXTURES, ETC. SHALL BE OF SAME MANUFACTURER AT ALL TIMES - NO EXCEPTIONS. CUSTOM MADE EQUIPMENT SHALL HAVE COMPLETE TEST DATA SUBMITTED BY THE MANUFACTURER ATTESTING TO ITS SAFETY. IN ADDITION, THE MATERIALS, EQUIPMENT AND INSTALLATION SHALL COMPLY WITH THE REQUIREMENTS, STANDARDS, RULES, AND REGULATIONS OF THE FOLLOWING AND BE MOST SUITABLE TO THE PURPOSE INTENDED:

   AMERICAN SOCIETY OF TESTING MATERIALS (ASTM)
   INSULATED POWER CABLE MANUFACTURERS ASSOCIATION (IPCMA)
   NATIONAL ELECTRICAL MANUFACTURERS ASSOCIATION (NEMA)
   AMERICAN STANDARD ASSOCIATION (ASA)
   NATIONAL FIRE PROTECTION AGENCY (NFPA)
   AMERICAN NATIONAL STANDARD INSTITUTE (ANSI)
   CALIFORNIA ELECTRICAL CODE (CEC), 2022 EDITION
   CALIFORNIA CODE OF REGULATIONS TITLE 24 (CCR)
   INSTITUTE OF ELECTRICAL AND ELECTRONIC ENGINEERS (IEEE)
   NATIONAL ELECTRICAL CODE (NEC), 2020 EDITION
   ELECTRONIC INDUSTRY ASSOCIATION (EIA)
   TELECOMMUNICATIONS INDUSTRY ASSOCIATION (TIA)

3. ELECTRICAL DOCUMENTS ARE DIAGRAMMATIC AND INDICATE THE GENERAL LAYOUT OF THE COMPLETE CONSTRUCTION WORK. DO NOT SCALE THE ELECTRICAL DRAWINGS FOR LOCATIONS OF ANY ELECTRICAL, ARCHITECTURAL, STRUCTURAL, CIVIL, OR MECHANICAL ITEMS OR FEATURES. DUE TO STRUCTURAL CONDITIONS, MECHANICAL DUCTING, OR PIPING REASONS, ELECTRICAL CONTRACTOR MAY DESIRE TO INSTALL THE WORK IN A MANNER DIFFERENT FROM THAT SHOWN. ROUTING OF RACEWAYS SHALL BE AT THE OPTION OF THE CONTRACTOR UNLESS OTHERWISE NOTED AND SHALL BE COORDINATED WITH OTHER SECTIONS.
4. ALL WIRING AND CABLING SHALL BE IN CONDUIT. ALL EXPOSED CONDUITS SHALL BE RIGID, GALVANIZED STEEL OR INTERMEDIATE METAL CONDUITS (IMC) OR ELECTRICAL METALLIC TUBING (EMT). ALL CONDUITS SHALL BE INSTALLED PARALLEL WITH, OR AT RIGHT ANGLES TO THE BUILDING LINES, BEAMS, OR CEILING. ALL LONG CONDUIT RUNS SHALL INCLUDE PULL BOXES AT 100-FOOT INCREMENTS AND SIZED AS REQUIRED OR NOTED. IN ADDITION, ALL CONDUITS CROSSING CEILING STRUCTURE EXPANSIONS SHALL HAVE APPROVED EXPANSION FITTINGS ACCORDINGLY. FLEXIBLE CONDUIT IS PERMITTED ONLY FOR SHORT LENGTHS TO EQUIPMENT TERMINATION AS REQUIRED (NOT TO EXCEED 5' IN LENGTH).
5. ALL CONDUCTORS SHALL BE COPPER. CONDUCTORS #10-AWG AND LARGER SHALL BE STRANDED TYPE WITH "THWN/THHN" INSULATION (75 DEGREES CELSIUS, WET OR DRY). ALUMINUM CONDUCTORS ARE NOT PERMITTED.
6. ALL FINAL CONNECTIONS TO AND INSTALLATION OF FURNISHED BY OTHERS EQUIPMENT SHALL BE MADE BY THE ELECTRICAL CONTRACTOR.
7. UTILITY PENETRATIONS OF ANY KIND IN FIRE AND SMOKE PARTITIONS AND CEILING ASSEMBLIES SHALL BE FIRE STOPPED AND SEALED WITH AN APPROVED MATERIAL SECURELY INSTALLED.
8. REFER TO SHEET #EG1.1, "SEISMIC ANCHORAGE REQUIREMENTS", FOR THE SEISMIC BRACING AND ANCHORAGE OF ELECTRICAL CONDUITS.
9. SOLAR PANELS AND SUPPORT SYSTEM TO BE GROUNDED PER CEC 250 AND 690.
10. INVERTER INCLUDES INTEGRAL DC DISCONNECT UNLESS OTHERWISE NOTED.
11. SECURELY FASTEN ALL ELECTRICAL EQUIPMENT BY MEANS OF RODS, HANGERS, SUPPORTS, GUIDES, ANCHORS AND SWAY BRACES TO MAINTAIN ALIGNMENT, TO PREVENT EQUIPMENT MOVEMENT, AND TO RESIST SEISMIC FORCES. DO NOT SECURE ANY ELECTRICAL EQUIPMENT TO ACOUSTICAL CEILING SUPPORT WIRES OR NON STRUCTURAL ELEMENTS.
12. STRAIGHT FEEDER, BRANCH CIRCUIT AND CONDUIT RUNS SHALL BE PROVIDED WITH SUFFICIENT PULL BOXES TO LIMIT THE MAXIMUM LENGTH OF ANY SINGLE CABLE PULL TO 100 FEET. PULL BOXES SHALL BE SIZED PER CODE OR AS INDICATED ON DRAWINGS. LOCATIONS SHALL BE DETERMINED IN THE FIELD OR AS INDICATED ON THE DRAWINGS.
13. FEEDERS:

   13.A. CONDUITS FOR SOLAR SYSTEMS SHALL BE IDENTIFIED WITH STENCIL MARKINGS AT 100 FOOT INCREMENTS, AT EACH INTERSECTION, AND AT EACH CROSSOVER FROM ONE AREA TO ANOTHER, PENETRATION OF WALLS, AND FLOORS WITH LETTERING 3/4" MINIMUM FOR 1" CONDUIT OR LESS, 1" MINIMUM FOR 2" CONDUIT OR LESS, AND 1-1/2" MINIMUM FOR 4" OR LESS IN THE COLORS AS FOLLOWS:

   208/240 VOLTS: BLACK
   1000 VOLTS: RED

14. ALL CONDUCTORS AND CABLES SHALL BE IDENTIFIED AT EACH JUNCTION BOX, OUTLET BOX, CABINET, PULL BOX, ETC., WITH VINYL SELF-ADHESIVE TAPE SHOWING PANEL AND CIRCUIT NUMBERS, CONTROL WIRE NUMBER OR OTHER APPROPRIATE INFORMATION REGARDING THE SYSTEM IT REPRESENTS.
15. DRAWINGS DO NOT SHOW ALL OFFSETS, BENDS, SPECIFIC FITTINGS, JUNCTION BOXES NOR PULL BOXES NECESSARY TO MEET JOB CONDITIONS. THESE ITEMS SHALL BE PROVIDED WHERE NECESSARY.
16. ALL EXISTING EQUIPMENT, MATERIAL, CONDUCTORS AND CABLES THAT ARE NOT TO BE REUSED IN THEIR PRESENT LOCATIONS SHALL BE CAREFULLY DISCONNECTED (CONDUCTORS AND CABLES REMOVED TO SOURCE OF SUPPLY) AND STORED IN A SAFE PLACE. IT SHALL BE MADE AVAILABLE FOR INSPECTION BY THE OWNER WHO WILL DESIGNATE WHAT IS TO BE STORED BY THE OWNER AND WHAT IS TO BE REMOVED FROM THE PREMISES BY THE ELECTRICAL CONTRACTOR.
17. THE ALTERATION OF THE EXISTING BUILDING IS WORK OF A COMPLEX NATURE WHICH WILL REQUIRE PLANNING, CAREFUL PREPARATION AND EXECUTION, ATTENTION TO DETAIL AND CLOSE SUPERVISION BY THE ELECTRICAL CONTRACTOR. ELECTRICAL CONTRACTOR WILL BE REQUIRED TO DO THIS WORK IN FULL COOPERATION WITH THE OTHER CONSTRUCTION TRADES AND, SUBJECT TO SCHEDULING, ARRANGE TO MINIMIZE DISRUPTION OF THE NORMAL ACTIVITIES OF THE FACILITY. ELECTRICAL CONTRACTOR TO COORDINATE ALL ACTIVITIES WITH OWNER.
18. IN AREAS WHERE THERE ARE NO ALTERATIONS INDICATED, THE EXISTING FACILITIES SHALL REMAIN IN SERVICE. IN CASE OF DOUBT, ASSUME THAT THE EXISTING ELECTRICAL SERVICE IS TO REMAIN IN OPERATION THROUGHOUT THE CONSTRUCTION PERIOD.
19. INSTALLATION OF ALL ELECTRICAL EQUIPMENT SHALL BE CAREFULLY COORDINATED WITH EXISTING CONDITIONS TO AVOID POSSIBLE INTERFERENCE PROBLEMS.
20. OUTDOOR ELECTRICAL EQUIPMENT SHALL BE INSTALLED IN SUITABLE ENCLOSURES AND SHALL BE PROTECTED FROM ACCIDENTAL CONTACT BY UNAUTHORIZED PERSONNEL, OR BY VEHICULAR TRAFFIC, OR BY ACCIDENTAL SPILLAGE OR LEAKAGE FROM PIPING SYSTEMS.
21. REFER TO MANUFACTURERS MOUNTING INSTALLATION REQUIREMENTS FOR PROPER SUPPORT SPACING AND ATTACHMENTS PER CALIFORNIA BUILDING CODE. INSTALL AS REQUIRED.
22. EXACT LOCATION OF SOLAR SYSTEM TO BE FIELD VERIFIED AND INSTALLED AS REQUIRED BY MANUFACTURER AND APPLICABLE CALIFORNIA BUILDING CODE.
23. SOLAR CIRCUIT BREAKERS SHALL BE INSTALLED ON OPPOSITE ENDS OF THE BUS BAR FROM OTHER SOURCE FEEDS (i.e. MAIN CIRCUIT BREAKER).
24. ACCESS AND WORKING SPACE SHALL BE PROVIDED AND MAINTAINED ABOUT ALL ELECTRICAL EQUIPMENT TO PERMIT READY AND SAFE OPERATION AND MAINTENANCE OF SUCH EQUIPMENT. THERE SHALL BE A MINIMUM CLEAR SPACE OF 36" IN FRONT OF EQUIPMENT; THE WIDTH OF CLEAR SPACE SHALL BE 32" AND A HEIGHT OF 6-1/2 FEET FROM GRADE.
25. THE DESIGN OF SUPPORT FRAME SYSTEM SHALL BE BASED ON CALCULATIONS OR ON TESTING IN COMPLIANCE WITH ICC-ES AC428 "ACCEPTANCE CRITERIA FOR MODULAR FRAMING SYSTEM USED TO SUPPORT PHOTOVOLTAIC (PV) MODULES," OR EQUAL, PER IR A-5.
26. SOLAR PANEL SYSTEM REQUIREMENTS
   a. SOLAR PANELS SHALL BE LISTED AND LABELED IN ACCORDANCE WITH UL 1703 PER CBC FOR THE PANEL ORIENTATIONS SHOWN ON PLANS, AND THIS SHALL BE INDICATED ON THE DRAWINGS.
   b. SOLAR PANEL ORIENTATION (PORTRAIT AND/OR LANDSCAPE LAYOUTS), ANCHORAGE POINT LOCATION, AND INSTALLATION TOLERANCE RANGE SHALL BE SPECIFIED ON THE DRAWINGS. PANEL CONNECTION GEOMETRY SHALL BE CONSISTENT WITH UL 1703 TESTS (AND UL 2703 TEST IF UTILIZED). IF HORIZONTAL SLIP JOINTS (e.g., THERMAL EXPANSION JOINTS) IN FRAMING MEMBERS ARE PRESENT, PANELS MUST NOT SPAN ACROSS NOR BE CONNECTED ON OPPOSING SIDES OF THE SLIP JOINTS.
   c. DRAWINGS MUST SPECIFY OVERALL SOLAR PANEL DIMENSIONS AND FULLY-DIMENSIONED FRAME CONFIGURATION OF THE SPECIFIED PANEL INCLUDING HEIGHT, LENGTH, WIDTH, THICKNESS OF EACH WEB/FLANGE, AND MATERIAL GRADE.
   d. DRAWINGS MUST SPECIFY THE SOLAR PANEL LOAD RATING IN POUNDS PER SQUARE FOOT (psf) BASED ON AN EFFECTIVE AREA EQUAL TO THE AREA OF ONE PV PANEL. THE LOAD RATING SHALL BE PROVIDED AS BOTH ALLOWABLE AND STRENGTH LEVEL CAPACITIES, FOR CLARITY.

CALIFORNIA STATE FIRE MARSHAL PHOTOVOLTAIC INSTALLATION GUIDELINES LABELS

PLACE ON ALL CONDUIT, LOCATED ON ROOF, INTERIOR AND EXTERIOR, EVERY 5 FEET, AT TURNS AND ABOVE AND/OR BELOW PENETRATIONS AND ALL DC COMBINER AND JUNCTION BOXES, IN 3/8" WHITE LETTERING ON RED BACKGROUND, ON FADE-RESISTANT MATERIAL:

WARNING: PHOTOVOLTAIC POWER SOURCE

PLACE THIS LABEL WITHIN MAIN SERVICE DISCONNECT (OR ON OUTSIDE IF DISCONNECT IS OPERABLE WITH COVER CLOSED)

CAUTION: SOLAR ELECTRIC SYSTEM

REFLECTIVE, WHITE LETTERING ON RED BACKGROUND, TYPICAL UNLESS OTHERWISE NOTED

CEC 705.10
PLACE A PERMANENT PLAQUE DENOTING ALL ELECTRIC POWER SOURCES ON OR IN THE PREMISES AT THE SERVICE EQUIPMENT LOCATION AND AT ALL ELECTRIC POWER PRODUCTION SOURCES CAPABLE OF INTERCONNECTION

CAUTION MULTIPLE SOURCES OF POWER

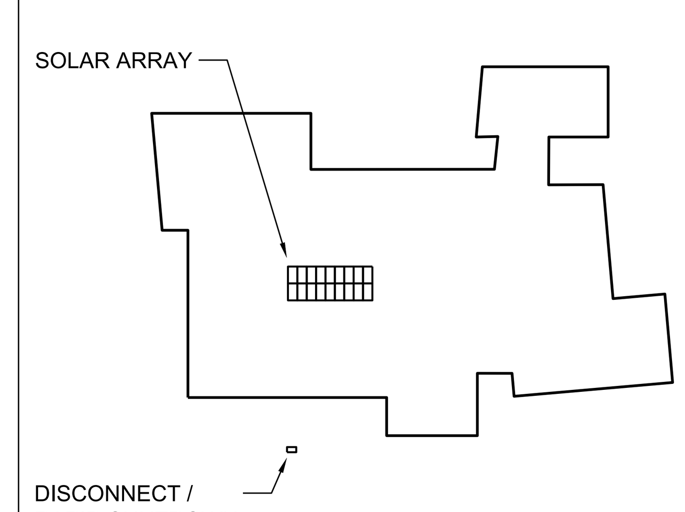

CEC 705.10(D)(4)
PLACE THIS LABEL AT UTILITY METER.

WARNING
DUAL POWER SOURCES SECOND SOURCE IS PHOTOVOLTAIC SYSTEM

CEC 690.13(B)
PLACE THIS LABEL AT ALL PV DISCONNECTION POINTS.

PV SYSTEM DISCONNECT

CEC 690.56(C)(2)
PLACE THIS LABEL AT PV RAPID SHUTDOWN SWITCH.

RAPID SHUTDOWN SWITCH FOR SOLAR PV SYSTEM

CEC 705.12(B)(3)
PLACE THIS LABEL AT P.O.C. TO SERVICE DISTRIBUTION EQUIPMENT (I.E. MAIN PANEL (*AND* SUBPANEL IF APPLICABLE))

WARNING
POWER SOURCE OUTPUT CONNECTION
DO NOT RELOCATE THIS OVERCURRENT DEVICE

Rose Sing Eastham & Associates
Electrical Consultants
131 S. Dunworth – (559)733-2671
Visalia, California 93292-6705

REGISTERED PROFESSIONAL ENGINEER — STEVEN KIRK EASTHAM — No. E 18786 — Exp. 6/30/25 — ELECTRICAL — STATE OF CALIFORNIA

PLAN CHECK REVISION 2

rrm design group
rrmdesign.com | (805) 543-1794
3765 SOUTH HIGUERA STREET, SUITE 102
SAN LUIS OBISPO, CA 93401

THE INCLUDED DRAWINGS, SPECIFICATIONS, IDEAS, DESIGNS AND ARRANGEMENTS REPRESENTED THEREBY ARE AND SHALL REMAIN THE PROPERTY OF RRM DESIGN GROUP AND NO PART THEREOF SHALL BE COPIED, DISCLOSED TO OTHERS OR USED IN CONNECTION WITH ANY WORK OR PROJECT OTHER THAN THE SPECIFIED PROJECT FOR WHICH THEY HAVE BEEN PREPARED AND DEVELOPED WITHOUT THE WRITTEN CONSENT OF RRM DESIGN GROUP. VISUAL CONTACT WITH THESE DRAWINGS OR SPECIFICATIONS SHALL CONSTITUTE CONCLUSIVE EVIDENCE OF ACCEPTANCE OF THESE RESTRICTIONS. SUBMITTAL OF THESE DOCUMENTS FOR PUBLIC AGENCY REVIEW SHALL NOT BE CONSIDERED A WAIVER OF RRM DESIGN GROUP'S RIGHTS.
RRM DESIGN GROUP COPYRIGHT 2023
RRM IS A CALIFORNIA CORPORATION

CONSULTANT

AGENCY

100% CD SET
NOT FOR CONSTRUCTION

FOURTH ST COMMUNITY CENTER AND PARK

HENDERSON AVE., PORTERVILLE, CA 93257

SOLAR DETAILS AND NOTES

NO.	REVISION	DATE
1	PLAN CHECK REVISION 1	5/17/24
2	PLAN CHECK REVISION 2	9/12/24

PROJECT MANAGER: JJ
DRAWN BY: CM — CHECKED BY: JJ
DATE: 2024.01.15
PROJECT NUMBER: 2883-01-RC22
SHEET: E505

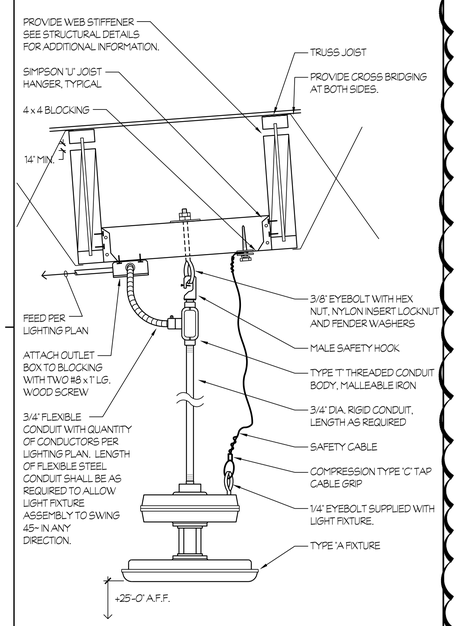

1 FIXTURE "A" & "AE" MOUNTING

NTS

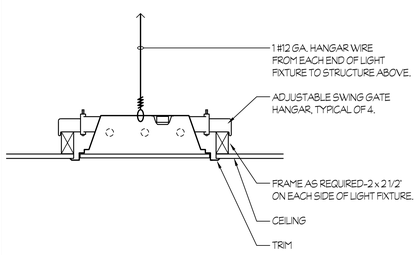

2 RECESSED FIXTURE MOUNTING

NTS

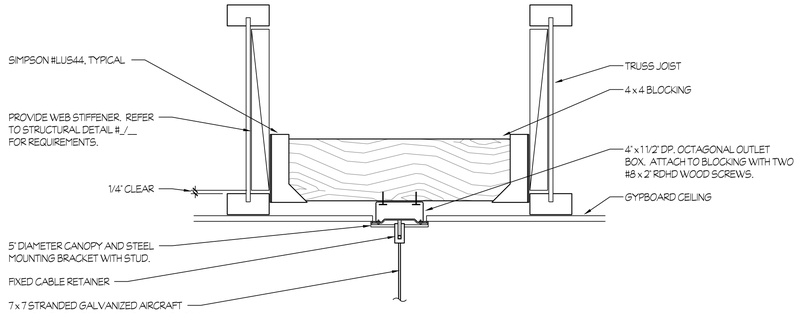

FEED LOCATION

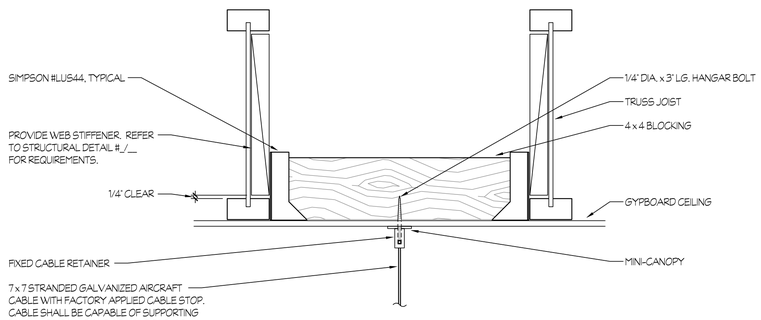

NON-FEED LOCATION

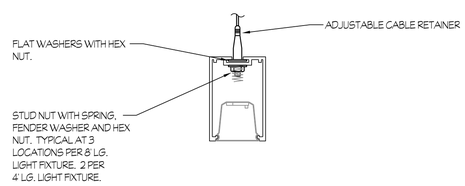

NOTES:
1. FOR SINGLE UNIT MOUNTING, PROVIDE TWO AIRCRAFT CABLE ASSEMBLIES.
2. FOR ROW MOUNTING, PROVIDE ONE AIRCRAFT CABLE ASSEMBLY PER LIGHT FIXTURE PLUS ONE AIRCRAFT CABLE ASSEMBLY PER ROW. PLACE ASSEMBLIES AT EACH END OF ROW AND AT EACH CONNECTION POINT BETWEEN ADJACENT LIGHT FIXTURES.

4 CABLE SUSPENDED FIXTURE MOUNTING

NTS

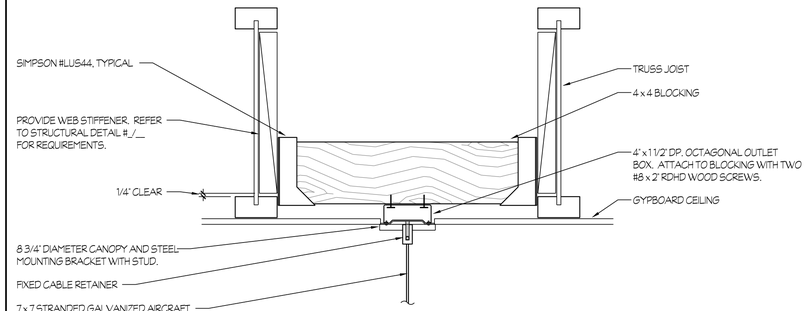

FEED LOCATION

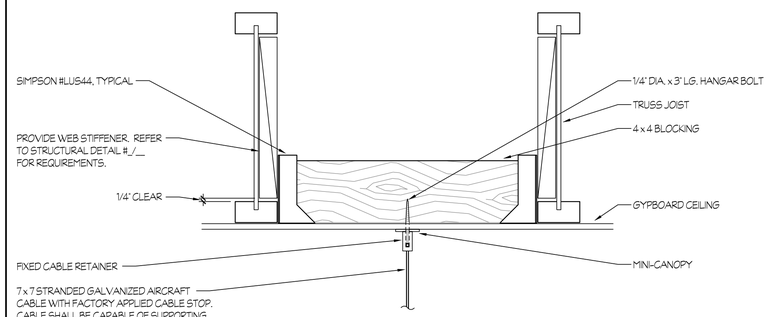

NON-FEED LOCATION

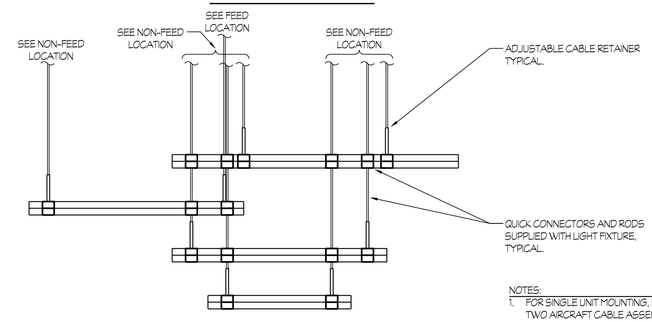

NOTES:
1. FOR SINGLE UNIT MOUNTING, PROVIDE TWO AIRCRAFT CABLE ASSEMBLIES.
2. FOR ROW MOUNTING, PROVIDE ONE AIRCRAFT CABLE ASSEMBLY PER LIGHT FIXTURE PLUS ONE AIRCRAFT CABLE ASSEMBLY PER ROW. PLACE ASSEMBLIES AT EACH END OF ROW AND AT EACH CONNECTION POINT BETWEEN ADJACENT LIGHT FIXTURES.

7 PENDANT FIXTURE MOUNTING

NTS

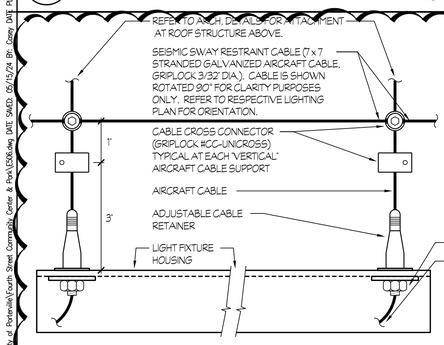

CONNECTION AT LIGHT FIXTURE SUPPORT
(ELEVATION)

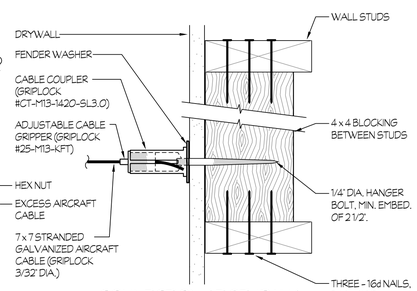

CONNECTION AT STUD WALL
(PLAN VIEW)

3 SEISMIC SWAY RESTRAINT

NTS

1

Rose Sing Eastham & Associates
Electrical Consultants
131 S. Dunworth – (559)733-2671
Visalia, California 93292-6705

REGISTERED PROFESSIONAL ENGINEER
KIRK ROSEN
No. E4878
Exp. 6/30/25
ELECTRICAL
STATE OF CALIFORNIA

PLAN CHECK REVISION 2

rrm design group
rrmdesign.com | (805) 543-1794
3765 SOUTH HIGUERA STREET, SUITE 102
SAN LUIS OBISPO, CA 93401

THE INCLUDED DRAWINGS, SPECIFICATIONS, IDEAS, DESIGNS AND ARRANGEMENTS REPRESENTED THEREBY ARE AND SHALL REMAIN THE PROPERTY OF RRM DESIGN GROUP AND NO PART THEREOF SHALL BE COPIED, DISCLOSED TO OTHERS OR EXHIBITED WITHOUT THE WRITTEN CONSENT OF RRM DESIGN GROUP, FOR ANY PURPOSE NOT PERTINENT TO THE PROJECT FOR WHICH THEY HAVE BEEN PREPARED AND DEVELOPED. WITHOUT THE WRITTEN CONSENT OF RRM DESIGN GROUP, VISUAL CONTACT WITH THESE DRAWINGS OR SPECIFICATIONS SHALL CONSTITUTE DISCLAIMER EVIDENCE OF ACCEPTANCE OF THESE RESTRICTIONS. THE SALE OF ANY PRINTED DRAWINGS OR SPECIFICATIONS SHALL NOT BE CONSIDERED A WAIVER OF RRM DESIGN GROUP'S RIGHTS.
RRM DESIGN GROUP COPYRIGHT 2023
RRM IS A CALIFORNIA CORPORATION

CONSULTANT

AGENCY

100% CD SET
NOT FOR CONSTRUCTION

FOURTH ST COMMUNITY CENTER AND PARK
HENDERSON AVE., PORTERVILLE, CA 93257

DETAILS

NO.	REVISION	DATE
1	PLAN CHECK REVISION 1	5/17/24
2	PLAN CHECK REVISION 2	9/12/24

PROJECT MANAGER: JJ
DRAWN BY: CM
CHECKED BY: JJ
DATE: 2024.01.15
PROJECT NUMBER: 2883-01-RC22
SHEET: E506

Z:\Portfolio\Jobs\1053\Dir. at Porterville\Fourth Street Community Center & Park\E506.dwg DATE SAVED: 05/15/24 BY: Copy DATE PLOTTED: 09/19/24 JOB #: 22-173-JJ

powered by Q.ANTUM DUO Z

Q.PEAK DUO ML-G10+

395-415

ENDURING HIGH PERFORMANCE

25 YR Warranty – Product & Performance

EUPD RESEARCH TOP BRAND PV MODULES Europe 2021

Q CELLS Yield Security

BREAKING THE 20% EFFICIENCY BARRIER
Q.ANTUM DUO Z Technology with zero gap cell layout boosts module efficiency up to 21.4%.

THE MOST THOROUGH TESTING PROGRAMME IN THE INDUSTRY
Q CELLS is the first solar module manufacturer to pass the most comprehensive quality programme in the industry: The new "Quality Controlled PV" of the independent certification institute TÜV Rheinland.

INNOVATIVE ALL-WEATHER TECHNOLOGY
Optimal yields, whatever the weather with excellent low-light and temperature behavior.

ENDURING HIGH PERFORMANCE
Long-term yield security with Anti LID Technology, Anti PID Technology[1], Hot-Spot Protect and Traceable Quality Tra.Q™.

EXTREME WEATHER RATING
High-tech aluminum alloy frame, certified for high snow (5400 Pa) and wind loads (4000 Pa).

A RELIABLE INVESTMENT
Inclusive 25-year product warranty and 25-year linear performance warranty[2].

[1] APT test conditions according to IEC / TS 62804-1:2015, method A (−1500 V, 96 h)
[2] See data sheet on rear for further information.

THE IDEAL SOLUTION FOR:
Rooftop arrays on residential buildings

Engineered in Germany

Q CELLS

MECHANICAL SPECIFICATION

Format	74.0 in × 41.1 in × 1.26 in (including frame) (1879 mm × 1045 mm × 32 mm)
Weight	48.5 lbs (22.0 kg)
Front Cover	0.13 in (3.2 mm) thermally pre-stressed glass with anti-reflection technology
Back Cover	Composite film
Frame	Black anodized aluminum
Cell	6 × 22 monocrystalline Q.ANTUM solar half cells
Junction Box	2.09–3.98 in × 1.26–2.36 in × 0.59–0.71 in (53–101 mm × 32–60 mm × 15–18 mm), IP67, with bypass diodes
Cable	4 mm² Solar cable; (+) ≥49.2 in (1250 mm), (−) ≥49.2 in (1250 mm)
Connector	Stäubli MC4; IP68

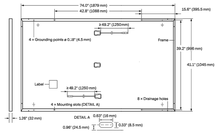

ELECTRICAL CHARACTERISTICS

POWER CLASS			395	400	405	410	415
MINIMUM PERFORMANCE AT STANDARD TEST CONDITIONS, STC[1] (POWER TOLERANCE +5 W / −0 W)							
Minimum	Power at MPP[3]	P_{MPP} [W]	395	400	405	410	415
	Short Circuit Current[3]	I_{SC} [A]	11.13	11.16	11.19	11.22	11.26
	Open Circuit Voltage[3]	V_{OC} [V]	45.03	45.06	45.09	45.13	45.16
	Current at MPP	I_{MPP} [A]	10.58	10.64	10.70	10.76	10.82
	Voltage at MPP	V_{MPP} [V]	37.32	37.59	37.85	38.11	38.37
	Efficiency[3]	η [%]	≥20.1	≥20.4	≥20.6	≥20.9	≥21.1
MINIMUM PERFORMANCE AT NORMAL OPERATING CONDITIONS, NMOT[2]							
Minimum	Power at MPP	P_{MPP} [W]	296.4	300.1	303.9	307.6	311.4
	Short Circuit Current	I_{SC} [A]	8.97	8.99	9.02	9.04	9.07
	Open Circuit Voltage	V_{OC} [V]	42.46	42.49	42.52	42.56	42.59
	Current at MPP	I_{MPP} [A]	8.33	8.38	8.43	8.48	8.53
	Voltage at MPP	V_{MPP} [V]	35.59	35.82	36.04	36.27	36.49

[1] Measurement tolerances P_{MPP} ±3 %; I_{SC}; V_{OC} ±5 % at STC: 1000 W/m², 25 ± 2 °C, AM 1.5 according to IEC 60904-3 • [2] 800 W/m², NMOT, spectrum AM 1.5

Q CELLS PERFORMANCE WARRANTY

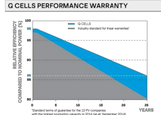

At least 98% of nominal power during first year. Thereafter max. 0.5% degradation per year. At least 93.5% of nominal power up to 10 years. At least 86% of nominal power up to 25 years.

All data within measurement tolerances. Full warranties in accordance with the warranty terms of the Q CELLS sales organisation of your respective country.

PERFORMANCE AT LOW IRRADIANCE

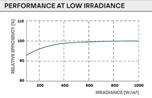

Typical module performance under low irradiance conditions in comparison to STC conditions (25 °C, 1000 W/m²)

TEMPERATURE COEFFICIENTS

Temperature Coefficient of I_{SC}	α	[%/K]	+0.04	Temperature Coefficient of V_{OC}	β	[%/K]	−0.27
Temperature Coefficient of P_{MPP}	γ	[%/K]	−0.34	Nominal Module Operating Temperature	NMOT	[°F]	109 ± 5.4 (43 ± 3 °C)

PROPERTIES FOR SYSTEM DESIGN

Maximum System Voltage V_{SYS}	[V]	1000 (IEC)/1000 (UL)	PV module classification	Class II
Maximum Series Fuse Rating	[A DC]	20	Fire Rating based on ANSI / UL 61730	TYPE 2
Max. Design Load, Push / Pull[1]	[lbs/ft²]	75 (3600 Pa)/55 (2660 Pa)	Permitted Module Temperature on Continuous Duty	−40 °F up to +185 °F (−40 °C up to +85 °C)
Max. Test Load, Push / Pull[1]	[lbs/ft²]	113 (5400 Pa)/84 (4000 Pa)		

[1] See Installation Manual

QUALIFICATIONS AND CERTIFICATES

UL 61730, CE-compliant,
Quality Controlled PV - TÜV Rheinland,
IEC 61215:2016, IEC 61730:2016,
U.S. Patent No. 9,893,215 (solar cells),
QCPV Certification ongoing.

PACKAGING INFORMATION

Horizontal packaging	76.4 in 1940 mm	43.3 in 1100 mm	48.0 in 1220 mm	1656 lbs 751 kg	24 pallets	24 pallets	32 modules

Specifications subject to technical changes of **Q CELLS** 2019-04-04_DATA_DUO_ML-G10+_395-415_2019-05_Rev02_NA

Note: Installation instructions must be followed. See the installation and operating manual or contact our technical service department for further information on approved installation and use of this product.

Hanwha Q CELLS America Inc.
400 Spectrum Center Drive, Suite 1400, Irvine, CA 92618, USA | **TEL** +1 949 748 59 96 | **EMAIL** inquiry@us.q-cells.com | **WEB** www.q-cells.us

1

480/277V, 3 PH, 4 W
400 A. BUSSING 400 A. MAIN BKR.
42 CIRCUIT

PANEL "H1A"

22K BREAKER A.I.C.
5 3/4" MAX. ENCL. DEPTH
SURF MOUNTING

CKT	BKR	LOAD: V.A. A	B	C	DESCRIPTION	DESCRIPTION	LOAD: V.A. C	B	A	BKR	CKT
1	20/1	919			LIGHTS - GYM	LIGHTS - EXTERIOR			465	20/1	2
3	20/1		917		LIGHTS - GYM	LIGHTS - EXTERIOR EMG		525		20/1	4
5	20/1			917	LIGHTS - GYM	LIGHTS - TEEN SPACE	1218			20/1	6
7	20/1	917			LIGHTS - GYM	LIGHTS - OFFICES			1697	20/1	8
9	20/1		919		LIGHTS - GYM	LIGHTS - PARKING LOT		1104		20/1	10
11	20/1			1040	LIGHTS - RAQUET BALL	LIGHTS - WALKWAY	117			20/1	12
13	60/3	8089			PHP-1, 29.2 FLA	PHP-3, 31.7 FLA			8781	60/3	14
15			8089					8781			16
17				8089			8781				18
19	35/3	4848			PHP-2, 17.5 FLA	SPARE				20/1	20
21			4848			SPARE				20/1	22
23				4848		SPARE				20/1	24
25	15/3	1330			BP-1, 4.8 FLA	SPARE				20/1	26
27			1330			SPARE				20/1	28
29				1330		SPARE				20/1	30
31	20/1				SPARE	SPACE					32
33	20/1				LIGHTS - MINI P ITCH	SPACE					34
35					SPACE	SPACE					36
37	175/3	25041			PHP-4A, 90.4 FLA	PHP-4B, 90.4 FLA			25041	175/3	38
39			25041					25041			40
41				25041			25041				42

(2)

LOAD SUMMARY	A	B	C	
CONNECTED LOAD (VA) :	77128	76595	76422	TOTAL CALCULATED
25% LCL/LML (VA) :	1000	866	823	LOAD FOR PANEL:
TOTAL LOAD (VA) :	78128	77461	77245	232834 VA
TOTAL LOAD (AMPS) :	282.0	279.6	278.9	

120/208V, 3 PH, 4 W
400 A. BUSSING NO MAIN BKR.
42 CIRCUIT

PANEL "EV"

22K BREAKER A.I.C.
5 3/4" MAX. ENCL. DEPTH
SURF MOUNTING

CKT	BKR	LOAD: V.A. A	B	C	DESCRIPTION	DESCRIPTION	LOAD: V.A. C	B	A	BKR	CKT
1	40/2	3600			E.V. STATION	FUTURE E.V. STATION			3600	40/2	2
3			3600					3600			4
5	40/2			3600	E.V. STATION	FUTURE E.V. STATION	3600			40/2	6
7		3600							3600		8
9	40/2		3600		FUTURE E.V. STATION	FUTURE E.V. STATION		3600		40/2	10
11				3600			3600				12
13	40/2	3600			FUTURE E.V. STATION	FUTURE E.V. STATION			3600	40/2	14
15			3600					3600			16
17	40/2			3600	FUTURE E.V. STATION	FUTURE E.V. STATION	3600			40/2	18
19		3600							3600		20
21	40/2		3600		FUTURE E.V. STATION	FUTURE E.V. STATION		3600		40/2	22
23				3600			3600				24
25	40/2	3600			FUTURE E.V. STATION	FUTURE E.V. STATION			3600	40/2	26
27			3600					3600			28
29	40/2			3600	FUTURE E.V. STATION	FUTURE E.V. STATION				40/2	30
31		3600									32
33	40/2		3600		FUTURE E.V. STATION	SPARE				20/1	34
35				3600		SPARE				20/1	36
37					SPACE	SPACE					38
39					SPACE	SPACE					40
41					SPACE	SPACE					42

(2)

LOAD SUMMARY	A	B	C	
CONNECTED LOAD (VA) :	39600	39600	36000	TOTAL CALCULATED
25% LCL/LML (VA) :	0	0	0	LOAD FOR PANEL:
TOTAL LOAD (VA) :	39600	39600	36000	115200 VA
TOTAL LOAD (AMPS) :	330.0	330.0	300.0	

120/208V, 3 PH, 4 W
225 A. BUSSING NO MAIN BKR.
42 CIRCUIT

PANEL "L1A"

22K BREAKER A.I.C.
5 3/4" MAX. ENCL. DEPTH
SURF MOUNTING

CKT	BKR	LOAD: V.A. A	B	C	DESCRIPTION	DESCRIPTION	LOAD: V.A. C	B	A	BKR	CKT
1	30/1	2500			RECEPT - DATA RACK	AUTO DEMAND RESPONSE			500	20/1	2
3	20/1		1250		RECEPT- DATA RACK	LIGHTING CONTROL PNL		500		20/1	4
5	20/1			1250	RECEPT - DATA RACK	F.A. CONTROL PANEL	500			20/1	6
7	20/1	900			RECEPT- GYM	RECEPT- GYM			1080	20/1	8
9	20/1		720		RECEPT - GYM	RECEPT - GYM		900		20/1	10
11	20/1			900	RECEPT- STOR, TEEN	RECEPT- STORAGE	720			20/1	12
13	20/1	720			RECEPT - TEEN, EXTER.	RECEPT - TEL. BKBD.			360	20/1	14
15	20/1		1000		RECEPT- T.V.'S	RECEPT - TEEN STUDY		900		20/1	16
17	20/1			1000	RECEPT- T.V.'S	RECEPT - TEEN STUDY	720			20/1	18
19	20/1	540			RECEPT- TOILET	RECEPT - CONTROLLED			180	20/1	20
21	20/1		370		RECEPT - E.D.F.	RECEPT- OFFICES		1080		20/1	22
23	20/1			540	RECEPT- CONTROLLED	RECEPT- OFFICES	1080			20/1	24
25	20/1	540			RECEPT- CONTROLLED	RECEPT- TOILETS			360	20/1	26
27	20/1		360		RECEPT - CONTROLLED	RECEPT - OFFICE		1080		20/1	28
29	20/1			500	FIRE ALARM RISER BELL	RECEPT - TEEN STUDY	540			20/1	30
31	20/1	500			SIGN LIGHTS MONUMENT	RECEPT - TEEN STUDY			360	20/1	32
33	20/1		500		SIGN LIGHT ON BLDG	SPARE				20/1	34
35	20/1				SPARE	SPARE				20/1	36
37					SPACE	SPACE					38
39					SPACE	SPACE					40
41					SPACE	SPACE					42

(1)

LOAD SUMMARY	A	B	C	
CONNECTED LOAD (VA) :	8540	8660	7750	TOTAL CALCULATED
25% LCL/LML (VA) :	0	0	0	LOAD FOR PANEL:
TOTAL LOAD (VA) :	8540	8660	7750	24950 VA
TOTAL LOAD (AMPS) :	71.2	72.2	64.6	

120/208V, 3 PH, 4 W
225 A. BUSSING NO MAIN BKR.
42 CIRCUIT

PANEL "L1B"

22K BREAKER A.I.C.
5 3/4" MAX. ENCL. DEPTH
SURF MOUNTING

CKT	BKR	LOAD: V.A. A	B	C	DESCRIPTION	DESCRIPTION	LOAD: V.A. C	B	A	BKR	CKT
1	20/1	180			RECEPT - W.P. ON ROOF	RECEPT- W.P. ON ROOF			360	20/1	2
3	30/2		2520		WATER HEATER	HPC-1/FC-1		2400		40/2	4
5				2520			2400				6
7	20/1	228			RECEPT - SCRBRD, SHOT CLKS	HPC-2/FC-2			3325	50/2	8
9	20/1		1200		RECEPT - ELEC. WINCH			3325			10
11	20/1			1200	RECEPT - ELEC. WINCH	DS-1, 20 FLA	2400			40/2	12
13	20/1	1200			RECEPT - ELEC. WINCH				2400		14
15	20/1		1200		RECEPT - ELEC. WINCH	SPLASH PAD		1200		20/1	16
17	20/1			1200	RECEPT - ELEC. WINCH	SPLASH PAD	1200			20/1	18
19	20/1	1200			RECEPT - ELEC. WINCH	BOOSTER PUMP			1440	25/2	20
21	20/1		1800		HAND DRYER			1440			22
23	20/1			1800	HAND DRYER	EF-2, EF-3	1000			20/1	24
25	20/1	27			CP-1	MOTORIZED BLEACHERS			744	20/1	26
27	20/1		744		MOTORIZED BLEACHERS	IRRIGATION CONTROLLER		330		20/1	28
29	20/1			744	MOTORIZED BLEACHERS	BOOSTER PUMP	2040			30/2	30
31	20/1	1230			LIGHTS - EXTERIOR				2040		32
33	20/1				SPARE	SPARE				20/1	34
35	20/1				SPARE	SPARE				20/1	36
37					SPACE	SPACE					38
39					SPACE	SPACE					40
41					SPACE	SPACE					42

(1)

LOAD SUMMARY	A	B	C	
CONNECTED LOAD (VA) :	14374	16159	16504	TOTAL CALCULATED
25% LCL/LML (VA) :	308	0	0	LOAD FOR PANEL:
TOTAL LOAD (VA) :	14682	16159	16504	47345 VA
TOTAL LOAD (AMPS) :	122.3	134.7	137.5	

TYPICAL PANEL SCHEDULE NOTES:

(1) PROVIDE A LOCK-ON DEVICE AT THIS CIRCUIT BREAKER. 'RED IN COLOR', SPACEAGE #ELOCK-FA OR EQUAL. PROVIDE AN ENGRAVED NAMEPLATE: 'FIRE ALARM CIRCUIT', WHITE LETTERS ON A RED BACKGROUND. MOUNT NAMEPLATE ONTO INTERIOR TRIM AND ADJACENT TO CIRCUIT BREAKER.

(2) PROVIDE SUB-FEED CIRCUIT BREAKER.

Rose Sing Eastham & Associates
Electrical Consultants
131 S. Dunworth – (559)733-2671
Visalia, California 93292-6705

REGISTERED PROFESSIONAL ENGINEER ALBERT KIRK EASTHAM No. 24878 Exp. 6/30/25 ELECTRICAL STATE OF CALIFORNIA

rrm design group
rrmdesign.com | (805) 543-1794
3765 SOUTH HIGUERA STREET, SUITE 102
SAN LUIS OBISPO, CA 93401

THE INCLUDED DRAWINGS, SPECIFICATIONS, IDEAS, DESIGNS AND ARRANGEMENTS REPRESENTED THEREBY ARE AND SHALL REMAIN THE PROPERTY OF RRM DESIGN GROUP AND NO PART THEREOF SHALL BE COPIED, DISCLOSED TO OTHERS OR SUBSTANTIALLY UTILIZED FOR ANY PURPOSE WHATSOEVER OTHER THAN THE PROJECT FOR WHICH THEY HAVE BEEN PREPARED AND DEVELOPED WITHOUT THE WRITTEN CONSENT OF RRM DESIGN GROUP. VISUAL CONTACT WITH THESE DRAWINGS OR SPECIFICATIONS SHALL CONSTITUTE DISCLAIMER EVIDENCE OF ACCEPTANCE OF THESE RESTRICTIONS. SHOULD CONSENT BE GIVEN, THIS DOCUMENT MUST STILL SHALL NOT BE CONSIDERED A WAIVER OF RRM DESIGN GROUP'S RIGHTS.
RRM DESIGN GROUP COPYRIGHT 2023
RRM IS A CALIFORNIA CORPORATION

CONSULTANT

AGENCY

100% CD SET
NOT FOR CONSTRUCTION

FOURTH ST COMMUNITY CENTER AND PARK

HENDERSON AVE., PORTERVILLE, CA 93257

PANEL SCHEDULES

NO.	REVISION	DATE
1	PLAN CHECK REVISION 1	5/17/24
2	PLAN CHECK REVISION 2	9/12/24
△		
△		
△		
△		

PROJECT MANAGER: JJ
DRAWN BY: CM
CHECKED BY: JJ
DATE: 2024.01.15
PROJECT NUMBER: 2883-01-RC22
SHEET: E601

PLAN CHECK REVISION 2

Z:\Drafting\Jobs\PSES\City of Porterville\Fourth Street Community Center & Park\E601.dwg DATE: SAVED: 05/15/24 BY: Corey DATE PLOTTED: 09/19/24 JOB # 22-173-JJ

SIGNALS / TELECOMMUNICATIONS APPLICABLE CODES AND STANDARDS

CODES:

2022 CALIFORNIA ELECTRICAL CODE (C.E.C.)

STANDARDS AND GUIDES:

NFPA 72 - NATIONAL FIRE ALARM CODE, (CALIFORNIA AMENDED)

ANSI/BICSI - TELECOMMUNICATIONS DISTRIBUTION METHODS MANUAL (TDMM), 13TH EDITION OR NEWER.

ANSI/BICSI 001-2017 - INFORMATION AND COMMUNICATION TECHNOLOGY SYSTEMS DESIGN AND IMPLEMENTATIONS BEST PRACTICES FOR EDUCATIONAL INSTITUTIONS AND FACILITIES.

ANSI/BICSI 005-2016 - ELECTRONIC SAFETY AND SECURITY (ESS) SYSTEM DESIGN AND IMPLEMENTATIONS BEST PRACTICES.

SIGNALS SYMBOLS

ALL DIMENSIONS TO TOPZ OF BOX, U.O.N.

	Symbol	Description
	(1)	ELECTRICAL KEYNOTE #1, REFER TO NOTES ON SAME SHEET.
	U.O.N.	UNLESS OTHERWISE NOTED
	(——)	CONDUIT RUN IN WALL OR ATTIC
	(–·–)	CONDUIT RUN IN FLOOR OR UG
	—∃	CONDUIT STUB - CAPPED AND LABELED.
	——>	HOMERUN CONDUIT TO NEAREST CROSS CONNECT OR SOUND EQUIPMENT RACK
	E——∃	CONDUIT SLEEVE
(A)	◁	DATA OUTLET IN WALL (+18" U.O.N.) (3 "D" CABLES)
	WA	DATA OUTLET IN CEILING WIRELESS ACCESS POINT (2 "D" CABLES)
(B)	S	PUBLIC ADDRESS SPEAKER, FLUSH MOUNTED IN WALL (+96" U.O.N.) OR HARD CEILING
(B)	H◁	PUBLIC ADDRESS HORN, FLUSH MOUNTED IN WALL +120", U.O.N. (WEATHERPROOF)
(C)	K	INTRUSION ALARM KEY PAD (+48" U.O.N.)
	✕	INTRUSION ALARM DOOR CONTACT IN DOOR FRAMING
(C)	▷IS	INTRUSION ALARM SIREN, ON WALL (+96" U.O.N.)
	MC	MC LOCATION
(C)	CR	ACCESS CONTROL CARD READER

SIGNALS SYMBOLS NOTES:

(A) ELECTRICAL CONTRACTOR SHALL PROVIDE A 5" SQUARE x 2 7/8" DEEP OUTLET BOX WITH SINGLE GANG RAISED RING, DEPTH AS REQUIRED. UNLESS OTHERWISE NOTED, RUN 1-1/4"C FROM OUTLET BOX AND STUB INTO ACCESSIBLE ATTIC SPACE ABOVE T-BAR CEILING. PROVIDE AN INSULATING BUSHING, BRIDGEPORT #TWB-54 OR EQUAL, AT STUB.

(B) ELECTRICAL CONTRACTOR SHALL PROVIDE SPECIAL BACK BOX PER MFG.

(C) ELECTRICAL CONTRACTOR SHALL PROVIDE A 4-11/6" SQUARE x 2 1/8" DEEP OUTLET BOX WITH SINGLE GANG RAISED RING, DEPTH AS REQUIRED. UNLESS OTHERWISE NOTED, RUN 3/4"C FROM OUTLET BOX AND STUB INTO ACCESSIBLE ATTIC SPACE ABOVE T-BAR CEILING. PROVIDE AN INSULATING BUSHING, BRIDGEPORT #TWB-52 OR EQUAL, AT STUB.

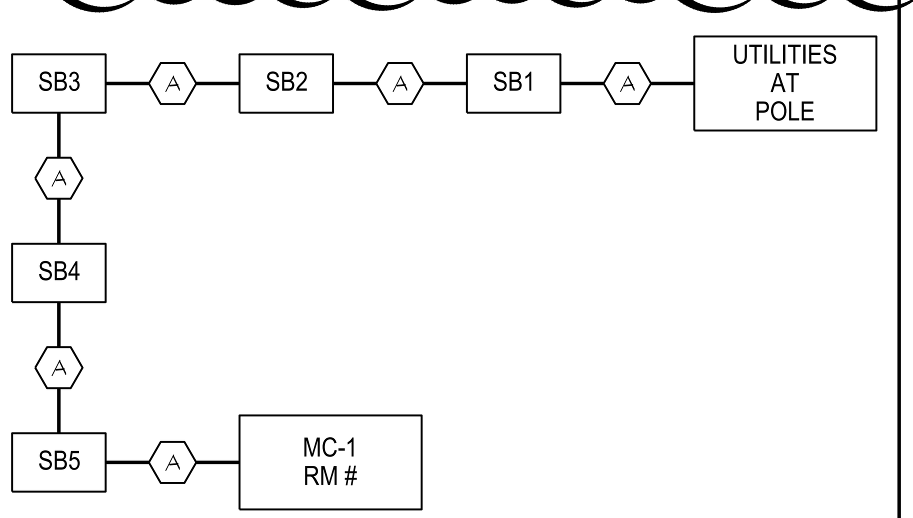

SCHEDULE:

(A) THREE 2"C. ONE FOR FIBER, ONE FOR COPPER, ONE IS SPARE.

1 WIRING DIAGRAM

NTS

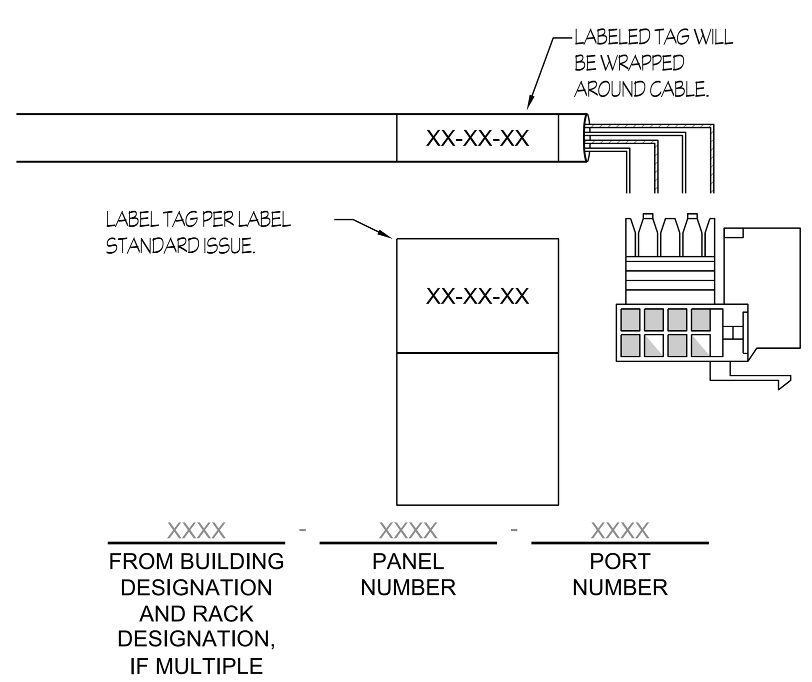

2 CABLE LINK IDENTIFIER LABELING FORMAT

NTS

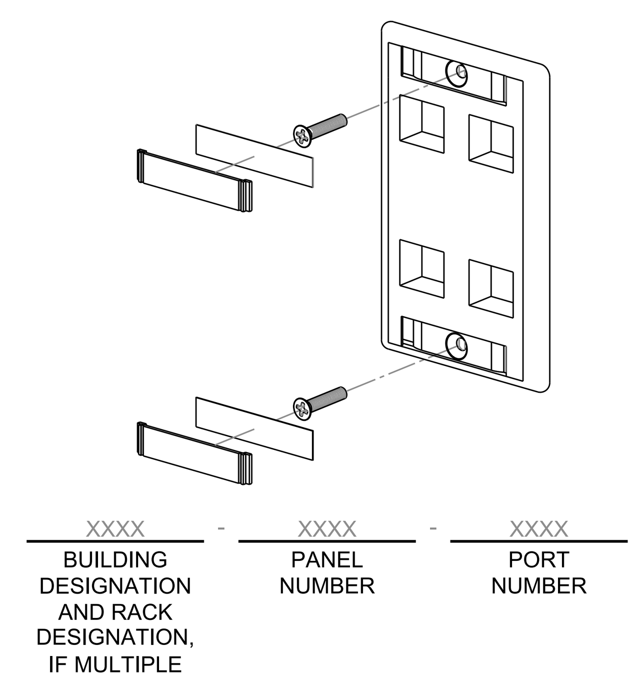

3 DATA OUTLET IDENTIFICATION MATRIX

NTS

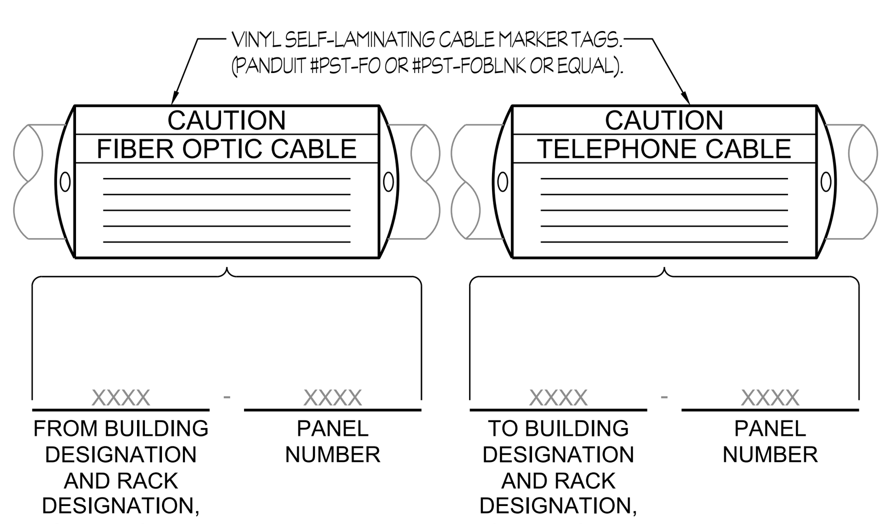

4 CABLE MARKER TAG

NTS

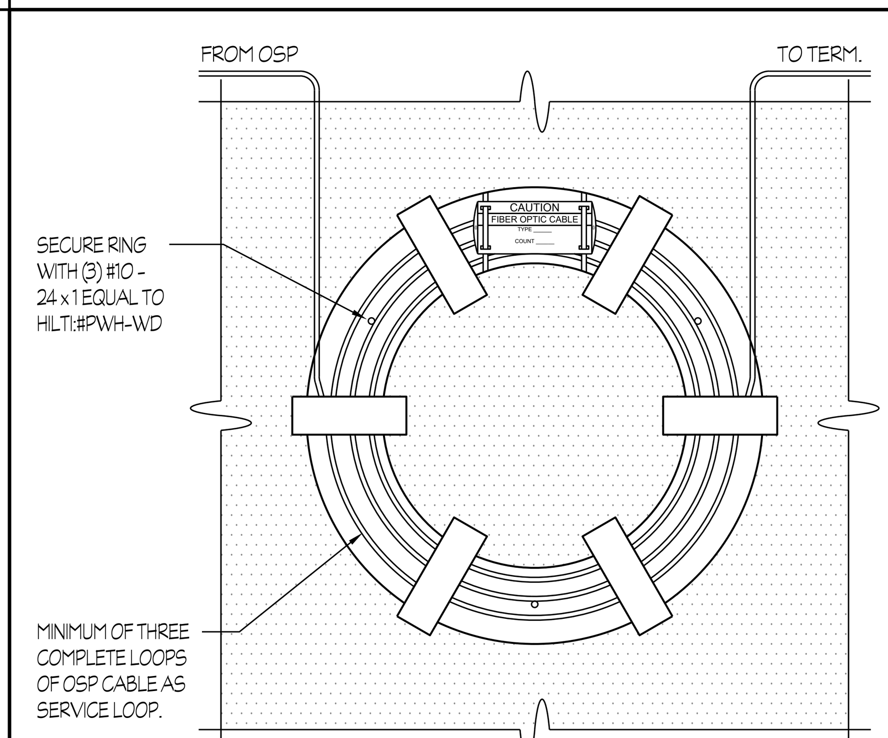

5 STORAGE RING FOR OSP CABLES

NTS

CHATSWORTH PART #11840-X48

CABINET WEIGHT = 155 LBS.
MAX. LOAD WEIGHT = 417 LBS.
E.A.S.E. PREAPPROVAL OF MANUFACTURER'S CERTIFICATION OPM-0196

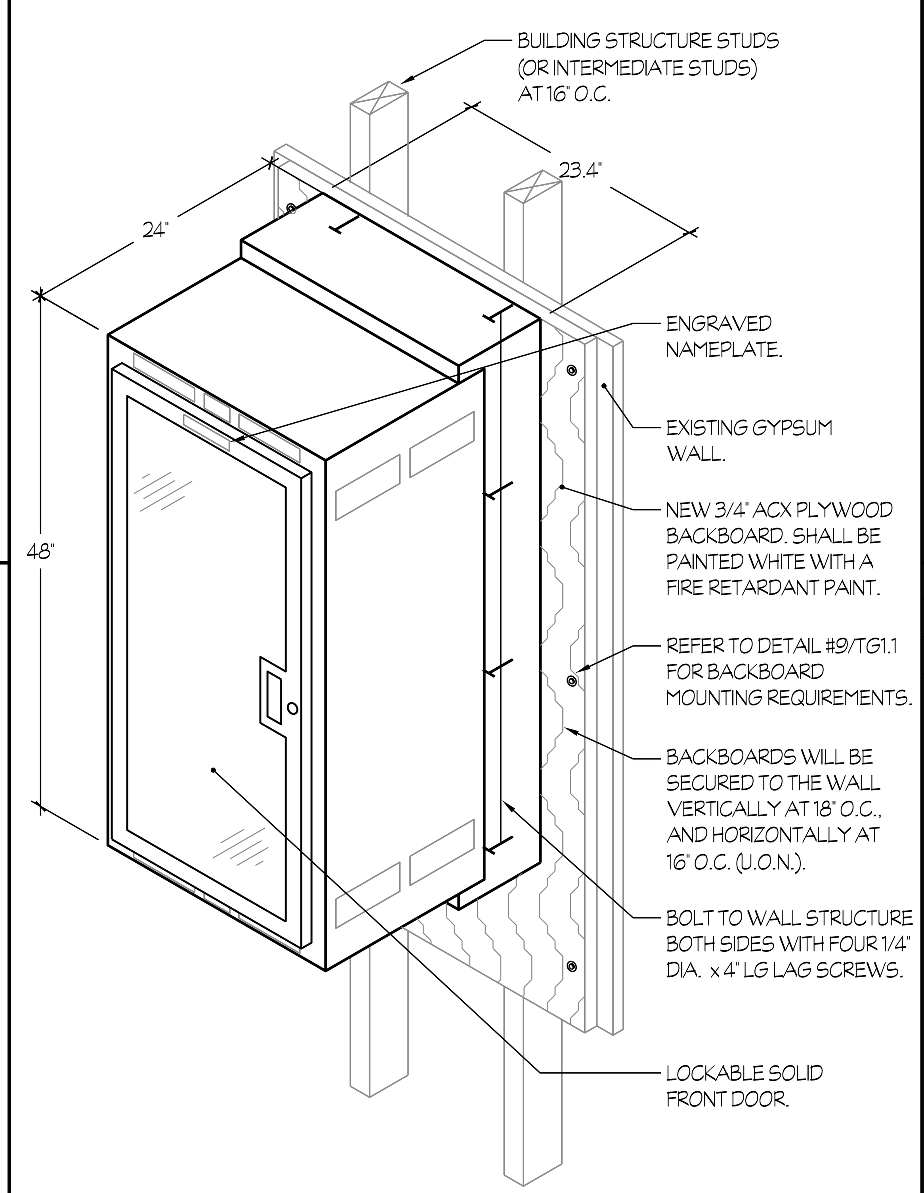

6 HC/IDF CABINET WALL RACK MOUNTING

NTS

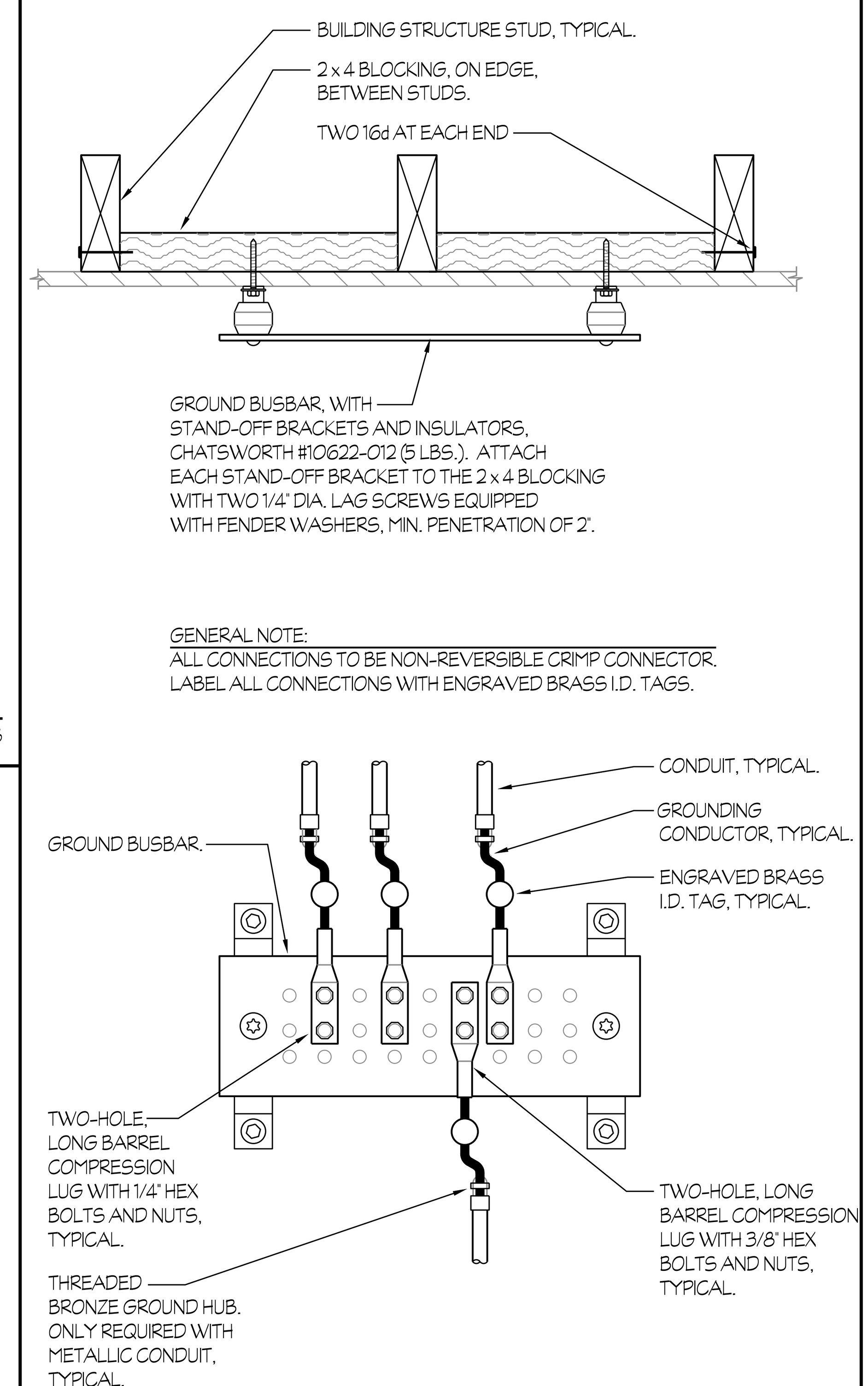

7 GROUND BUSBAR MOUNTING AND CONNECTIONS

NTS

PULL BOX	SB1-SB5	.	.	.
W	24"	.	.	.
L	36"	.	.	.

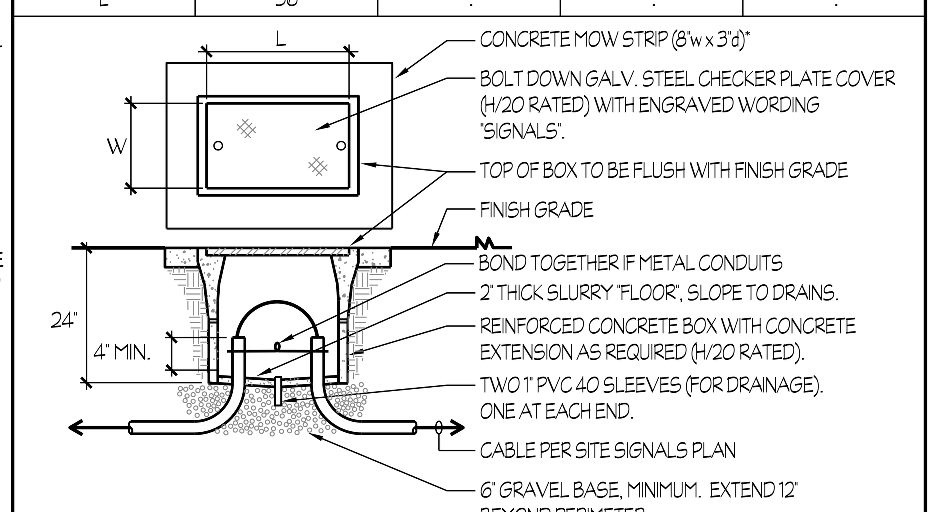

* NOTE: WHERE PULL BOX IS ADJACENT TO CONCRETE WALK, EXTEND MOWSTRIP TO CONNECT WITH WALK. FOAM SEAL ALL CONDUITS IN YARD BOXES.

** NOTE: INTERIOR DIMENSIONS MEASURED AT "OPENING" OF PULL BOX.

8 PULL BOX MOUNTING

NTS

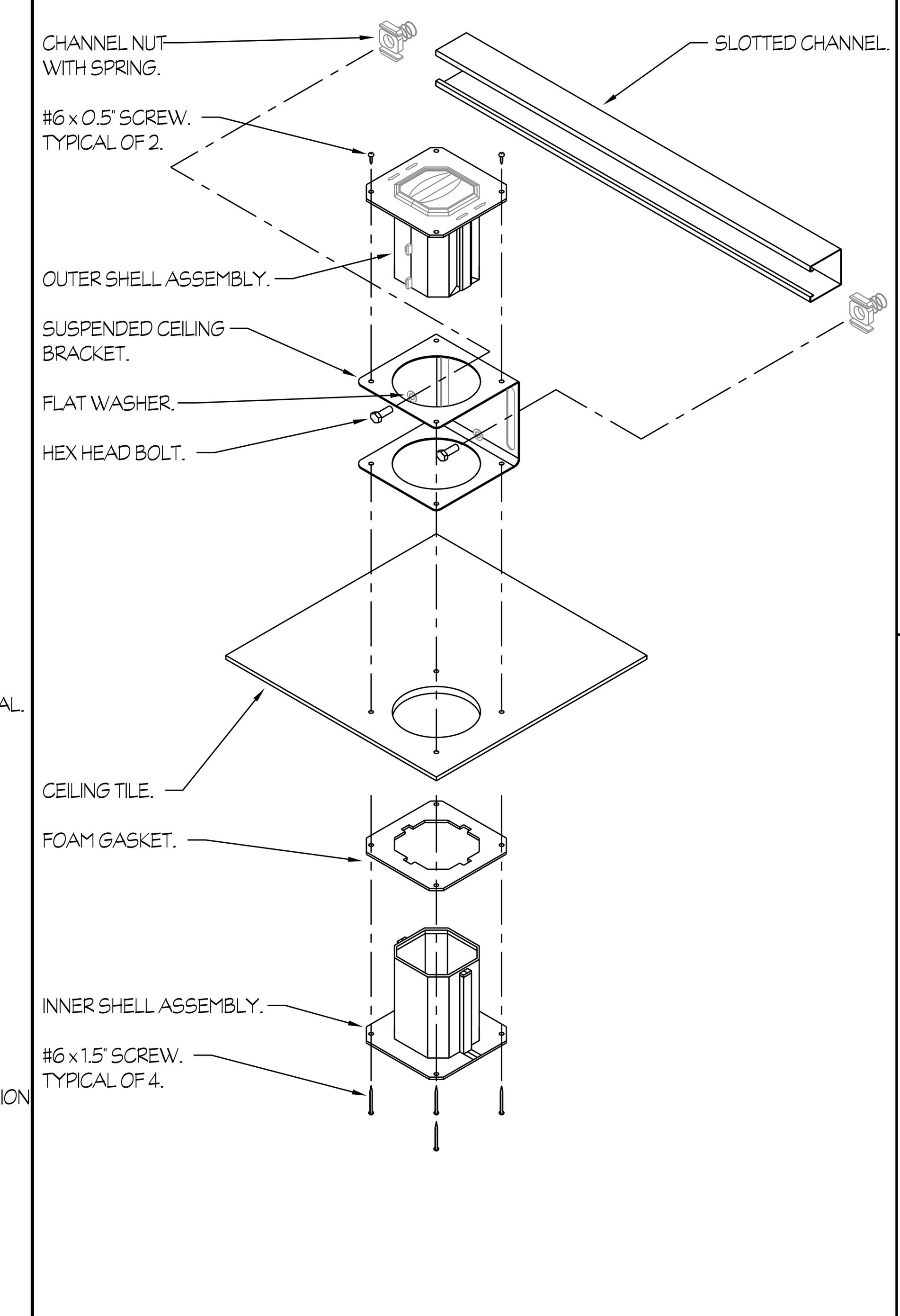

9 SMOKE AND ACOUSTICAL PATHWAY WITH CEILING KIT

NTS

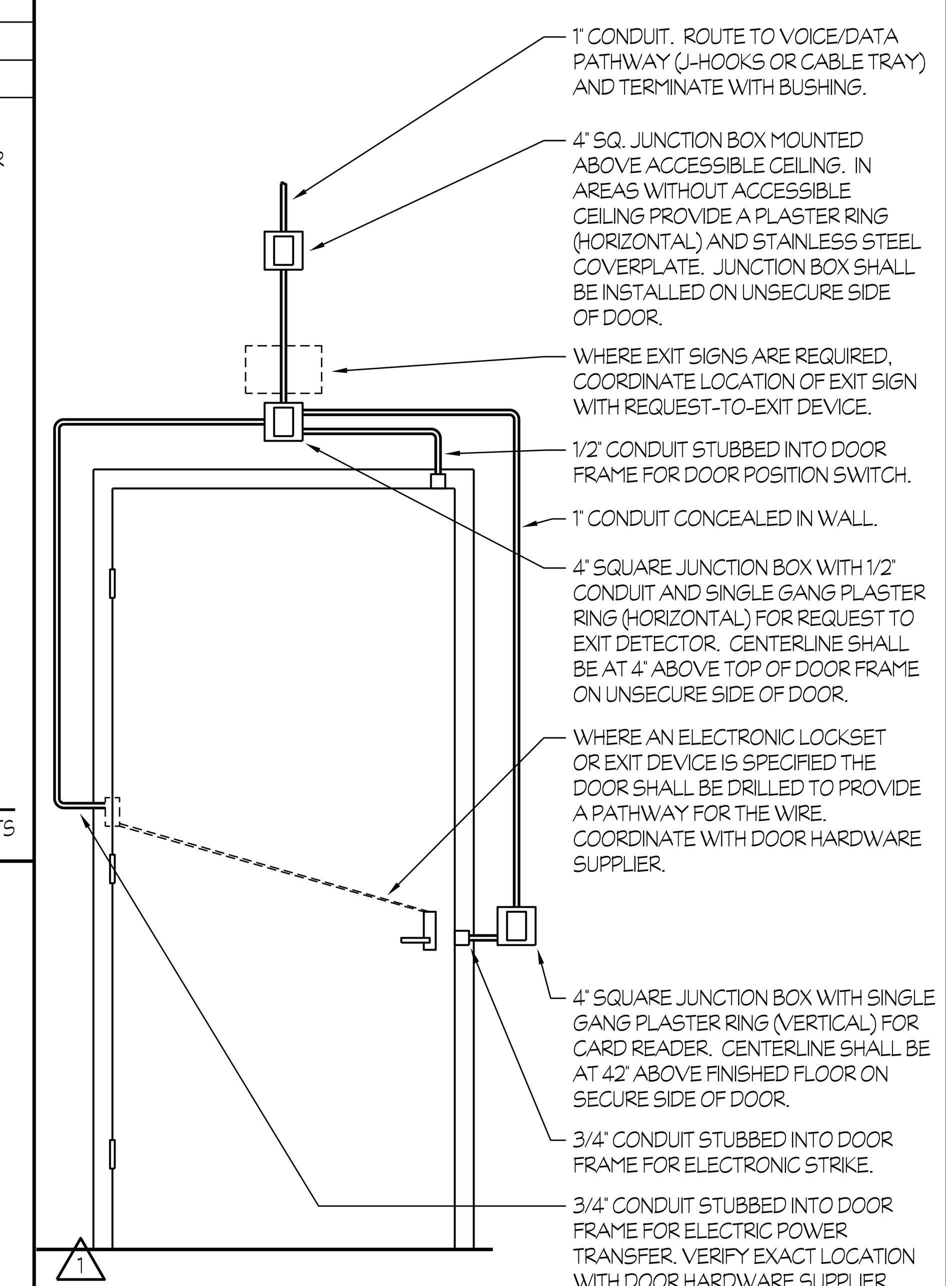

10 ACCESS CONTROL ROUGH-IN

NTS

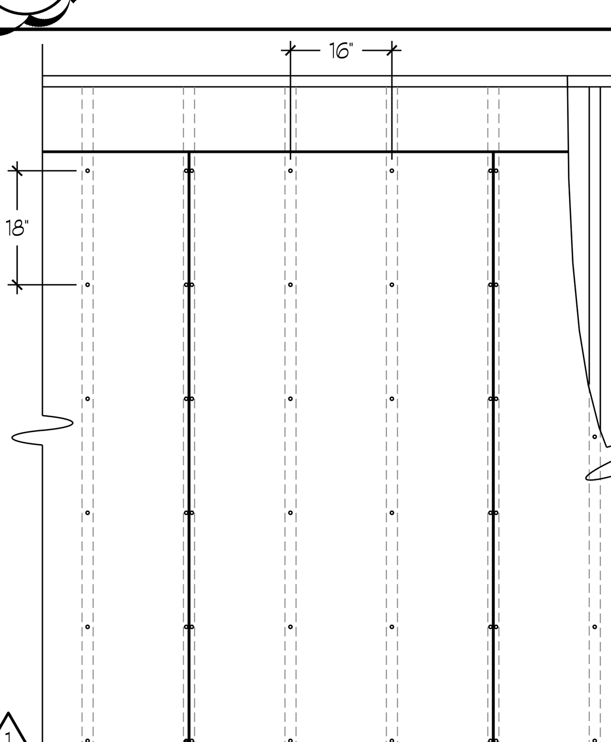

NOTES (THIS DETAIL ONLY):

1. BACKBOARDS SHALL BE 3/4" ACX PLYWOOD AND PAINTED WHITE WITH A FIRE RETARDANT PAINT.
2. BACKBOARDS SHALL BE ATTACHED TO THE BUILDING STRUCTURE STUDS WITH #8 x 2 1/2" LG. FLAT-HEAD PHILLIPS WOOD SCREWS. SCREW HEAD SHALL BE COUNTER SUNK TO BE FLUSH WITH THE FACE OF BACKBOARD.
3. BACKBOARDS WILL BE SECURED TO THE WALL VERTICALLY AT 18" O.C., AND HORIZONTALLY AT 16" O.C. (U.O.N.).
4. PROVIDE CUTOUTS FOR ALL DUPLEX AND/OR QUADRUPLEX RECEPTACLES.

11 PLYWOOD BACKBOARD MOUNTING DETAIL

NTS

rrm design group
rrmdesign.com | (805) 543-1794
3765 SOUTH HIGUERA STREET, SUITE 102
SAN LUIS OBISPO, CA 93401

THE INCLUDED DRAWINGS, SPECIFICATIONS, IDEAS, DESIGNS AND ARRANGEMENTS REPRESENTED THEREBY ARE AND SHALL REMAIN THE PROPERTY OF RRM DESIGN GROUP AND NO PART THEREOF SHALL BE COPIED, DISCLOSED TO OTHERS OR USED IN CONNECTION WITH ANY WORK OR PROJECT OTHER THAN THE SPECIFIED PROJECT FOR WHICH THEY HAVE BEEN PREPARED AND DEVELOPED WITHOUT THE WRITTEN CONSENT OF RRM DESIGN GROUP. VISUAL CONTACT WITH THESE DRAWINGS OR SPECIFICATIONS SHALL CONSTITUTE CONCLUSIVE EVIDENCE OF ACCEPTANCE OF THESE RESTRICTIONS. SUBMITTAL OF THESE DOCUMENTS FOR PUBLIC AGENCY REVIEW SHALL NOT BE CONSIDERED A WAIVER OF RRM DESIGN GROUP'S RIGHTS.
RRM DESIGN GROUP COPYRIGHT 2023
RRM IS A CALIFORNIA CORPORATION

CONSULTANT

AGENCY

100% CD SET
NOT FOR CONSTRUCTION

Rose Sing Eastham & Associates
Electrical Consultants
131 S. Dunworth - (559)733-2671
Visalia, California 93292-6705

REGISTERED PROFESSIONAL ENGINEER STEVEN KIRK EASTHAM No. E 18786 Exp. 6/30/25 ELECTRICAL STATE OF CALIFORNIA

PLAN CHECK REVISION 2

FOURTH ST COMMUNITY CENTER AND PARK

HENDERSON AVE., PORTERVILLE, CA 93257

SIGNALS SYMBOLS, CODES, NOTES AND DETAILS

NO.	REVISION	DATE
1	PLAN CHECK REVISION 1	5/17/24
2	PLAN CHECK REVISION 2	9/12/24

PROJECT MANAGER: JJ
DRAWN BY: CM
CHECKED BY: JJ
DATE: 2024.01.15
PROJECT NUMBER: 2883-01-RC22
SHEET: TG101

Z:\Drafting\Jobs\RSE\City of Porterville\Fourth Street Community Center & Park\TG101.dwg DATE SAVED: 05/15/24 BY: Casey DATE PLOTTED: 09/19/24 JOB #: 22-173-JJ

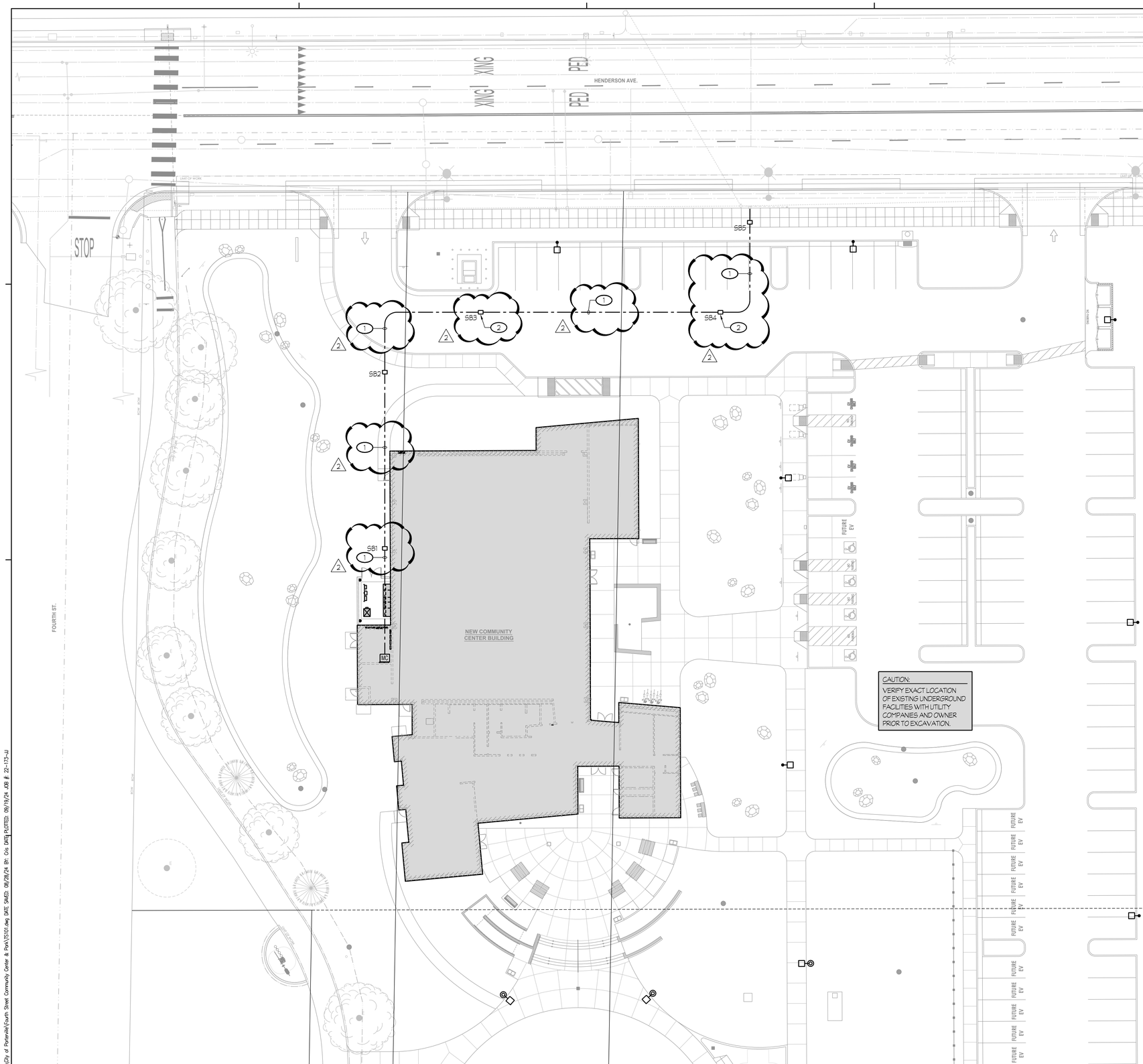

NOTES (THIS SHEET ONLY):

1. (THREE) NEW 2' CONDUITS. ONE FOR FIBER 12 STRAND SINGLE MODE CABLE, ONE FOR COPPER (A.T.&T OR SPECTRUM), ONE SPARE.
2. PULL BOXES, TRAFFIC RATED ON ASPHALT/CONCRETE.

1 ENLARGED SITE SIGNALS PLAN

A-415 SCALE: 1" = 20'-0"

0' 10' 20' 40'

Rose Sing Eastham & Associates
Electrical Consultants
131 S. Dunworth – (559)733-2671
Visalia, California 93292-6705

REGISTERED PROFESSIONAL ENGINEER
ELECTRICAL
STATE OF CALIFORNIA
No. E-15788
Exp. 6/30/25

rrm design group
rrmdesign.com | (805) 543-1794
3765 SOUTH HIGUERA STREET, SUITE 102
SAN LUIS OBISPO, CA 93401

THE INCLUDED DRAWINGS, SPECIFICATIONS, IDEAS, DESIGNS AND ARRANGEMENTS REPRESENTED THEREBY ARE AND SHALL REMAIN THE PROPERTY OF RRM DESIGN GROUP AND NO PART THEREOF SHALL BE COPIED, DISCLOSED TO OTHERS OR USED IN CONNECTION WITH ANY WORK OR PROJECT OTHER THAN THE SPECIFIED PROJECT FOR WHICH THEY HAVE BEEN PREPARED AND DEVELOPED WITHOUT THE WRITTEN CONSENT OF RRM DESIGN GROUP. VISUAL CONTACT WITH THESE DRAWINGS OR SPECIFICATIONS SHALL CONSTITUTE CONCLUSIVE EVIDENCE OF ACCEPTANCE OF THESE RESTRICTIONS. SUBMITTAL OF THESE DOCUMENTS FOR PUBLIC AGENCY REVIEW SHALL NOT BE CONSIDERED A WAIVER OF RRM DESIGN GROUP'S RIGHTS.
RRM DESIGN GROUP COPYRIGHT 2023
RRM IS A CALIFORNIA CORPORATION

CONSULTANT

AGENCY

100% CD SET
NOT FOR CONSTRUCTION

FOURTH ST COMMUNITY CENTER AND PARK
HENDERSON AVE., PORTERVILLE, CA 93257

ENLARGED SITE SIGNALS PLAN

NO.	REVISION	DATE
1	PLAN CHECK REVISION 1	5/17/24
2	PLAN CHECK REVISION 2	9/12/24

PROJECT MANAGER: JJ
DRAWN BY: CM
CHECKED BY: JJ
DATE: 2024.01.15
PROJECT NUMBER: 2883-01-RC22
SHEET: TS101

PLAN CHECK REVISION 2

Z:\Drafting\Jobs\RSE\City of Porterville\Fourth Street Community Center & Park\TS101.dwg DATE SAVED: 08/28/24 BY: Cris DATE PLOTTED: 09/19/24 JOB #: 22-173-JJ

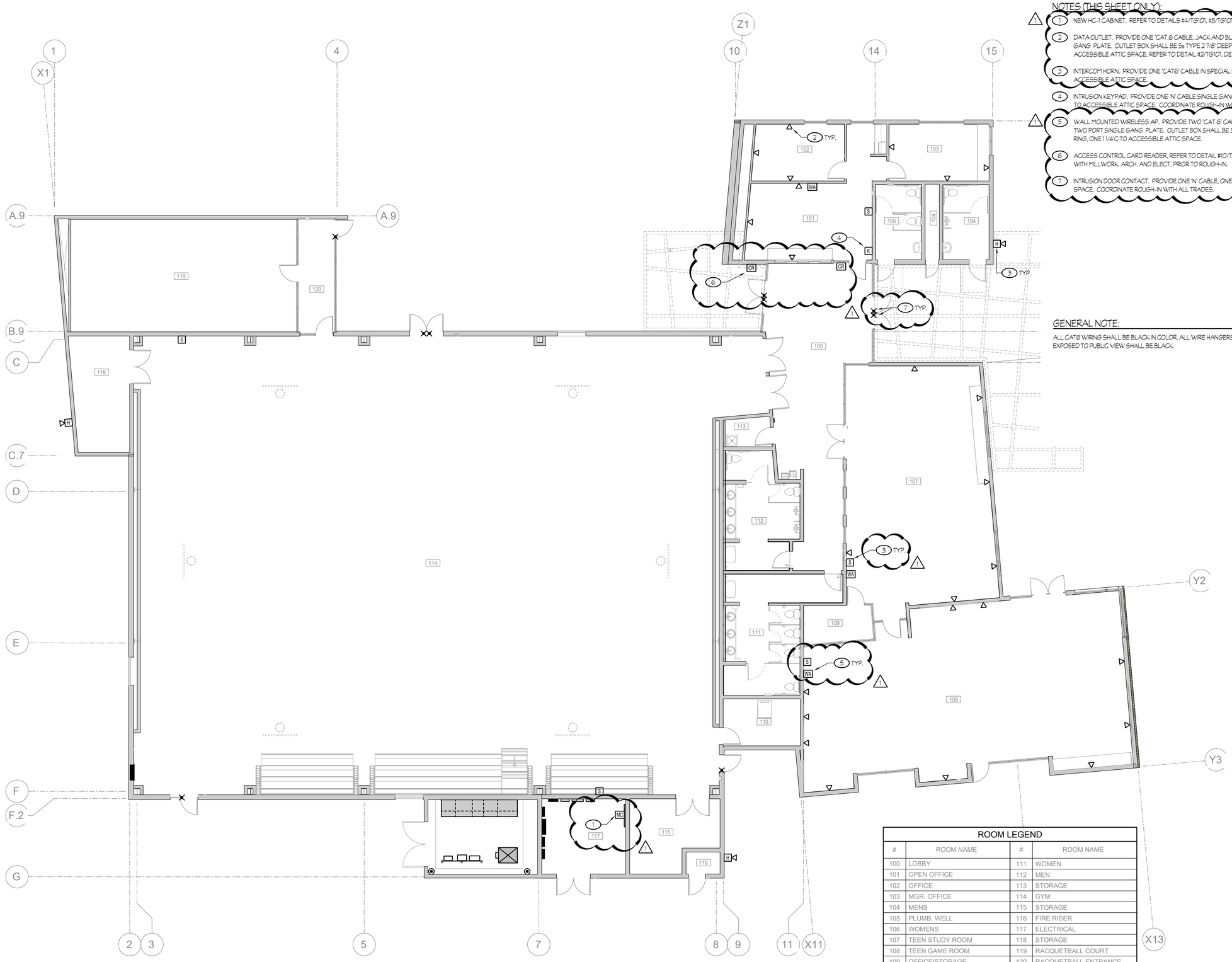

NOTES (THIS SHEET ONLY):

1. NEW HC-1 CABINET. REFER TO DETAILS #4/TG101, #5/TG101, #6/TG101, #7/TG101.
2. DATA OUTLET. PROVIDE ONE 'CAT.6 CABLE, JACK AND BLANK IN TWO PORT SINGLE GANG PLATE. OUTLET BOX SHALL BE 5s TYPE 2 7/8' DEEP, 1G TRIM RING, ONE 11/4'C TO ACCESSIBLE ATTIC SPACE. REFER TO DETAIL #2/TG101, DETAIL #3/TG101.
3. INTERCOM HORN. PROVIDE ONE 'CAT6' CABLE IN SPECIAL BACK BOX, ONE 3/4'C TO ACCESSIBLE ATTIC SPACE.
4. INTRUSION KEYPAD. PROVIDE ONE 'N' CABLE SINGLE GANG BOX AND RING, ONE 3/4'C TO ACCESSIBLE ATTIC SPACE. COORDINATE ROUGH-IN WITH ALL TRADES.
5. WALL MOUNTED WIRELESS AP. PROVIDE TWO 'CAT.6' CABLES, JACK AND BLANK IN TWO PORT SINGLE GANG PLATE. OUTLET BOX SHALL BE 5s TYPE 2 7/8' DEEP, 1G TRIM RING, ONE 11/4'C TO ACCESSIBLE ATTIC SPACE.
6. ACCESS CONTROL CARD READER, REFER TO DETAIL #10/TG101. COORDINATE OUTLET WITH MILLWORK, ARCH. AND ELECT. PRIOR TO ROUGH-IN.
7. INTRUSION DOOR CONTACT. PROVIDE ONE 'N' CABLE, ONE 3/4'C TO ACCESSIBLE SPACE. COORDINATE ROUGH-IN WITH ALL TRADES.

GENERAL NOTE:

ALL CAT6 WIRING SHALL BE BLACK IN COLOR, ALL WIRE HANGERS, OR CONDUIT EXPOSED TO PUBLIC VIEW SHALL BE BLACK.

ROOM LEGEND

#	ROOM NAME	#	ROOM NAME
100	LOBBY	111	WOMEN
101	OPEN OFFICE	112	MEN
102	OFFICE	113	STORAGE
103	MGR. OFFICE	114	GYM
104	MENS	115	STORAGE
105	PLUMB. WELL	116	FIRE RISER
106	WOMENS	117	ELECTRICAL
107	TEEN STUDY ROOM	118	STORAGE
108	TEEN GAME ROOM	119	RACQUETBALL COURT
109	OFFICE/STORAGE	120	RACQUETBALL ENTRANCE
110	MECHANICAL		

1 OVERALL SIGNALS PLAN

A-415 SCALE: 1/8" = 1'-0"

0' 4' 8' 16'

Rose Sing Eastham & Associates
Electrical Consultants
131 S. Dunworth ~ (559)733-2671
Visalia, California 93292-6705

REGISTERED PROFESSIONAL ENGINEER ROSEMARY KIRK EASTHAM Exp. 6/30/25 ELECTRICAL STATE OF CALIFORNIA

rrm design group
rrmdesign.com | (805) 543-1794
3765 SOUTH HIGUERA STREET, SUITE 102
SAN LUIS OBISPO, CA 93401

THE INCLUDED DRAWINGS, SPECIFICATIONS, IDEAS, DESIGNS AND ARRANGEMENTS REPRESENTED THEREBY ARE AND SHALL REMAIN THE PROPERTY OF RRM DESIGN GROUP AND NO PART THEREOF SHALL BE COPIED, DISCLOSED TO OTHERS OR SUBSTANTIALLY UTILIZED FOR ANY PURPOSE WHATSOEVER OTHER THAN THE PROJECT FOR WHICH THEY HAVE BEEN PREPARED AND DEVELOPED, WITHOUT THE WRITTEN CONSENT OF RRM DESIGN GROUP. VISUAL CONTACT WITH THESE DRAWINGS OR SPECIFICATIONS SHALL CONSTITUTE DISCLAIMER EVIDENCE OF ACCEPTANCE OF THESE RESTRICTIONS. THE SALE OF ANY PROPERTY DEPICTED OR DESCRIBED HEREIN SHALL NOT BE CONSIDERED A WAIVER OF RRM DESIGN GROUP'S RIGHTS.
RRM DESIGN GROUP COPYRIGHT 2023
RRM IS A CALIFORNIA CORPORATION

CONSULTANT

AGENCY

100% CD SET
NOT FOR CONSTRUCTION

FOURTH ST COMMUNITY CENTER AND PARK
HENDERSON AVE., PORTERVILLE, CA 93257

OVERALL SIGNALS PLAN

NO.	REVISION	DATE
1	PLAN CHECK REVISION 1	5/17/24
2	PLAN CHECK REVISION 2	9/12/24

PROJECT MANAGER: JJ
DRAWN BY: CM
CHECKED BY: JJ
DATE: 2024.01.15
PROJECT NUMBER: 2883-01-RC22
SHEET: T101

PLAN CHECK REVISION 2

Z:\Drafting\Jobs\RSE\City of Porterville\Fourth Street Community Center & Park\T101.dwg DATE SAVED: 05/15/24 By: Casey DATE PLOTTED: 09/19/24 JOB # 22-173-JJ

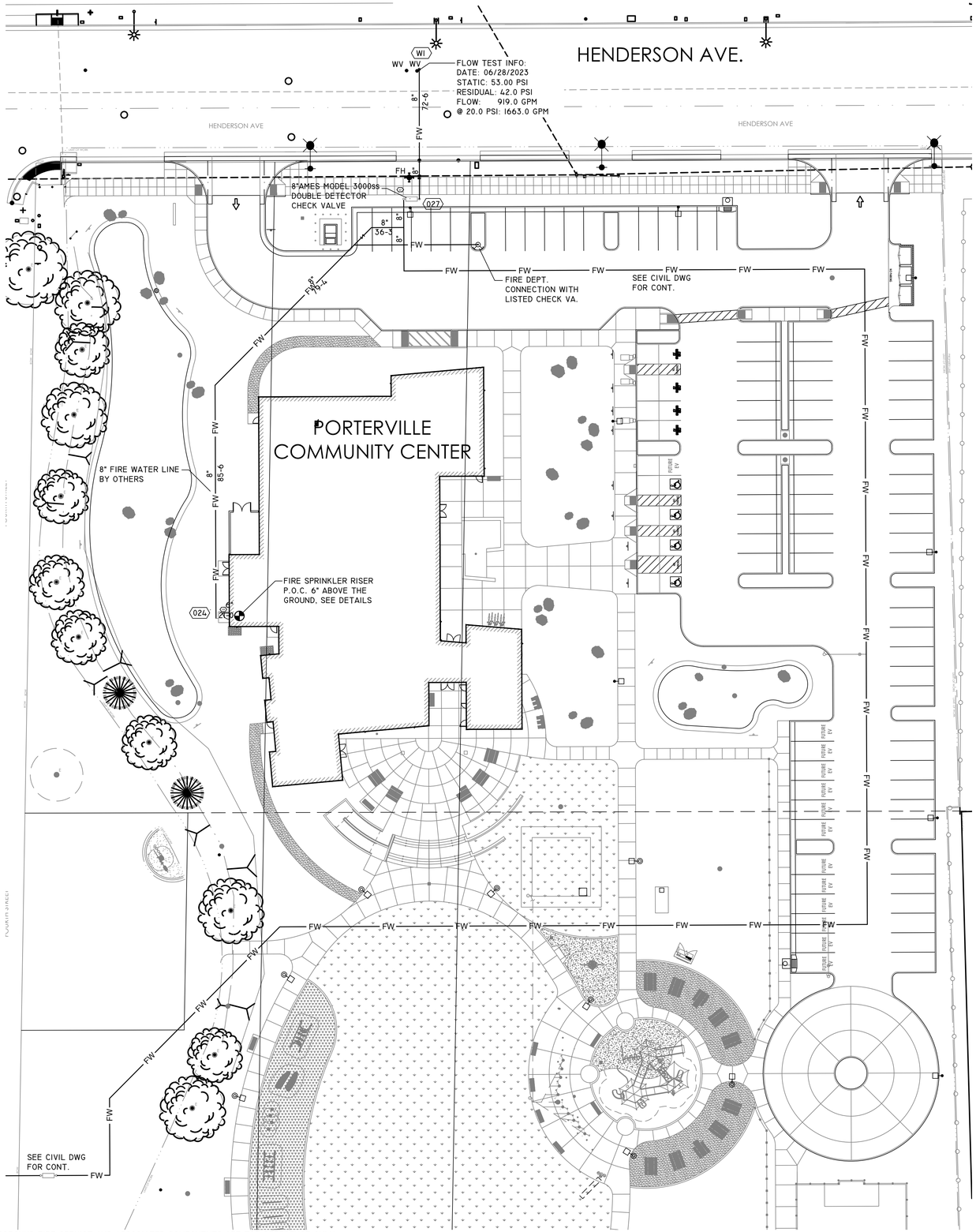

NOTE:
1. UNDERGROUND FIRE SERVICE AND ASSOCIATED COMPONENTS ARE FOR REFERENCE ONLY. REFER TO CIVIL ENGINEER'S SITE GRADING AND UTILITY PLAN FOR PRECISE INFORMATION.

1 SPRINKLER FIRE WATER SITE PLAN

LEGEND & SYMBOLS

	SPRINKLER RISER, SEE DETAIL #1
	QUICK RESPONSE CONCEALED SPRINKLER - 155°
	QUICK RESPONSE UPRIGHT SPRINKLER - 155°
	QUICK RESPONSE UPRIGHT SPRINKLER - 200°
	TYP. HANGER SYMBOL, SEE DETAILS
	PIPE RESTRAINT, SEE DETAILS
	SPRINKLER BELL
	PIPE UP OR DOWN
00	HYDRAULIC REFERENCE NODE
	NEW SPRINKLER PIPE
FW	NEW SPRINKLER UNDERGROUND
AIR	AUTOMATIC AIR VENT, SEE DETAILS
	2-WAY FIRE DEPARTMENT CONNECTION WITH LISTED CHECK VA.
	LATERAL BRACE
	LONGITUDINAL BRACE
	4-WAY EARTHQUAKE BRACE

APPLICABLE CODES

- 2022 CALIFORNIA BUILDING CODE (CBC) WITH CALIFORNIA AMENDMENTS
- 2022 CALIFORNIA FIRE CODE (CFC) WITH CALIFORNIA AMENDMENTS
- 2022 NFPA 13, INSTALLATION OF FIRE SPRINKLER SYSTEMS
- 2022 NFPA 72, NATIONAL FIRE ALARM CODE (CA AMENDED)

BRACING LEGEND

SB1	LATERAL BRACING AT 20'-0 O.C. ATTACHED TO BOTTOM OF W-BEAM
SB2	LONGITUDINAL BRACING AT 40'-0 O.C. ATTACHED TO BOTTOM OF W-BEAM
SB3	LATERAL BRACING AT 20'-0 O.C. ATTACHED TO BOTTOM OF W-BEAM
SB4	LONGITUDINAL BRACING AT 40'-0 O.C. ATTACHED TO BOTTOM OF W-BEAM

SPRINKLER INFO.

SYM.	MANUFACTURER	SIN	NPT	K	TEMP	DESCRIPTION	QTY.
	VICTAULIC	V2708	½	5.6	155	QUICK RESPONSE PENDENT SPRINKLER	55
	VICTAULIC	V2708	½	5.6	200	QUICK RESPONSE PENDENT SPRINKLER	3
	VICTAULIC	V2704	½	5.6	200	QUICK RESPONSE UPRIGHT	119
						TOTAL	177

VICINITY MAP

NOT TO SCALE

FIRE SPRINKLER NOTES

1. THIS FIRE SPRINKLER SYSTEM SHALL BE DESIGNED AND INSTALLED PER NFPA 13.
2. THE SPRINKLER CONTRACTOR WILL PROVIDE THE OWNER WITH THE NECESSARY INSTRUCTION MANUALS FOR THE UPKEEP OF THE SYSTEM.
3. PROVIDE ALL EQUIPMENT, I.E., CONTROL VALVES, BACKFLOW PREVENTER, CHECK VALVES, FLOOR CONTROL VALVE ASSEMBLIES WITH A MINIMUM CLEARANCE OF 3 FEET.
4. A SET OF APPROVED PLANS SHALL BE MAINTAINED AT ALL TIMES ON THE JOB SITE.
5. ALL NEW SPRINKLERS TO BE QUICK RESPONSE.
6. THE SYSTEM SHALL ONLY EMPLOY THE USE OF U.L. LISTED MATERIALS AND DEVICES.
7. ONLY NEW SPRINKLERS SHALL BE EMPLOYED IN THE INSTALLATION OF THE SPRINKLER SYSTEM.
8. ALL TAMPER SWITCHES SHALL BE CONNECTED TO AN APPROVED CENTRAL STATION SUPERVISION COMPANY.
9. ALL VALVES SHALL HAVE A PERMANENTLY AFFIXED SIGN INDICATING ITS FUNCTION.
10. A STOCK OF SPARE SPRINKLERS OF EACH STYLE, TYPE, AND TEMP. RATING, ALONG WITH A SPRINKLER WRENCH, SHALL BE LOCATED AT EACH RISER, PER NFPA 13.
11. AUTOMATIC SPRINKLER SYSTEM SHALL BE SUPERVISED BY AN APPROVED, PROPRIETARY OR REMOTE STATION SERVICE OR A LOCAL ALARM WHICH WILL GIVE AN AUDIBLE SIGNAL AT A CONSTANTLY ATTENDED LOCATION.
12. ANY PORTION OF THIS SPRINKLER SYSTEM WHICH IS EXPOSED TO FREEZING SHALL BE ADEQUATELY PROTECTED AGAINST THIS EXPOSURE. EXPOSED PIPING 1½" AND SMALLER TO BE INSULATED.
13. ALL LOW POINTS IN THE SYSTEM TO BE PROVIDED WITH AUXILIARY DRAIN.
14. FERROUS PIPING: WELDED OR SEAMLESS STEEL, ANSI/ASTM A-53 WITH WELDING PERFORMED BY A CERTIFIED WELDER.
15. PLAIN END FITTINGS WITH MECHANICAL COUPLINGS AND FITTINGS THAT USE STEEL GRIPPING DEVICES TO BIT INTO THE PIPE ARE PROHIBITED. STEEL PIPING WITH WALL THICKNESS LESS THAN SCHEDULE 40 MUST NOT BE THREADED.
16. PIPES 2 INCH OR SMALLER TO BE SCHEDULE 40 STEEL PIPE WITH THREADED FITTINGS.
17. PIPES 2½ TO 8 INCH TO BE SCHEDULE #10 STEEL PIPE WITH GRVD END FITTINGS.
18. ALL THREADED FITTINGS TO BE CLASS 125 D.I. AND ALL GROOVED FITTINGS AND COUPLING TO BE VICTAULIC OR EQUAL.
19. AN APPOINTMENT SHALL BE MADE A MINIMUM OF 72 HRS WORKING DAYS IN ADVANCE WITH THE CSFM FOR ALL INSPECTIONS AND TEST.
20. ALL SYSTEM PIPING SHALL BE HYDROSTATICALLY TESTED AT 200 PSI FOR TWO HOURS, OR AT 50 PSI ABOVE THE SYSTEM OPERATING PRESSURE, WHICHEVER IS GREATER.
21. OVERHEAD PIPING SHALL NOT BE COVERED OR CONNECTED UNTIL A HYDROSTATIC TEST HAS BEEN COMPLETED.
22. ROUGH AND FINAL INSPECTION ARE REQUIRED ON ALL SYSTEMS.
23. A METAL CALCULATION PLATE INDICATING THE HIGHEST RESIDUAL PRESSURE REQUIRED FOR THE SYSTEM OPERATION SHALL BE PERMANENTLY ATTACHED TO THE RISER.
24. FIRE DEPARTMENT CONNECTIONS SHALL BE VISIBLE, ACCESSIBLE, HAVE NST FEMALE OUTLETS & PROTECTIVE CAPS, AND AN APPROVED CHECK VALVE IN THE MAIN LINE (AS CLOSE TO THE FDC AS POSSIBLE).

SCOPE OF WORK

1. TO DESIGN A COMPLETE WET FIRE SUPPRESSION SYSTEM TO A NEW ONE STORY COMMUNITY CENTER LOCATED AT 4TH STREET AND HENDERSON AVENUE, PORTERVILLE, CA 93257
2. SYSTEM DESIGN TO COMPLY IN ACCORDANCE WITH THE NFPA 13, 2022 EDITION AND THE LOCAL JURISDICTION REQUIREMENTS.

DESIGN CRITERIA

1. DESIGN AREA 1: GYM - LIGHT HAZARD
DESIGN FOR 0.10 DENSITY OVER 1950 FT² WITH 30% INCREASE FOR THE SLOPED CEILING PER SECTION PER DENSITY/AREA AND FIG. 19.2.3.1.1 OF THE NFPA 13, 2022 EDITION.

QUICK RESPONSE STANDARD PENDENT
196 FT² MAXIMUM SPACING, ½" NPT,
K-FACTOR OF 5.6, WITH 165° TEMP.

2. DESIGN AREA 2: OFFICES - LIGHT HAZARD
DENSITY OF 0.10 GPM/FT² OVER 1500 FT² OR ENTIRE AREA , WITH AREA REDUCTION FOR USING QUICK RESPONSE SPRINKLER PER FIGURE 11.2.3.2.3.1 PER NFPA 13, 2022 EDITION

STANDARD QUICK RESPONSE PENDENT
196 FT² MAXIMUM SPACING, ½" NPT,
K-FACTOR OF 5.6, WITH 155° TEMP.

SHEET INDEX

FP-0.0	SPRINKLER FIRE WATER SITE PLAN AND GENERAL NOTES
FP-1.0	PARTIAL SPRINKLER CEILING PLAN "A"
FP-1.1	PARTIAL SPRINKLER CEILING PLAN "B"
FP-2.0	PARTIAL SPRINKLER PIPING PLAN "A"
FP-2.1	PARTIAL SPRINKLER PIPING PLAN "B"
FP-3.0	BUILDING SECTIONS
FP-3.1	BUILDING SECTIONS
FP-4.0	DETAILS AND MANUFACTURER'S DATA SHEET
FP-5.0	MANUFACTURER'S DATA SHEET
FP-6.0	SEISMIC BRACING CALCULATIONS

rrm design group
rrmdesign.com | (805) 543-1794
3765 SOUTH HIGUERA STREET, SUITE 102
SAN LUIS OBISPO, CA 93401

THE INCLUDED DRAWINGS, SPECIFICATIONS, IDEAS, DESIGNS AND ARRANGEMENTS REPRESENTED THEREBY ARE AND SHALL REMAIN THE PROPERTY OF RRM DESIGN GROUP AND NO PART THEREOF SHALL BE COPIED, DISCLOSED TO OTHERS OR USED IN CONNECTION WITH ANY WORK OR PROJECT OTHER THAN THE SPECIFIED PROJECT FOR WHICH THEY HAVE BEEN PREPARED AND DELIVERED, WITHOUT THE WRITTEN CONSENT OF RRM DESIGN GROUP. VISUAL CONTACT WITH THESE DRAWINGS OR SPECIFICATIONS SHALL CONSTITUTE CONCLUSIVE EVIDENCE OF ACCEPTANCE OF THESE RESTRICTIONS. SUBMITTAL OF THESE DOCUMENTS FOR PUBLIC AGENCY REVIEW SHALL NOT BE CONSTRUED AS A PUBLICATION OF WORK PROVIDING GROUNDS FOR
RRM DESIGN GROUP COPYRIGHT 2023.
RRM IS A CALIFORNIA CORPORATION

CONSULTANT

COLLINGS & ASSOCIATES
FIRE PROTECTION ENGINEERING
260 MAPLE COURT, 241 VENTURA, CA 93003
PHONE: (805)658-0003 FAX: (805)658-0044
www.collingsandassociates.com

PORTERVILLE COMMUNITY CENTER AND PARK
HENDERSON AVE., PORTERVILLE, CA 93257

SPRINKLER FIRE WATER SITE PLAN AND GENERAL NOTES

NO.	REVISION	DATE
△		
△		
△		
△		
△		
△		

PLAN CHECK REVISION 1

Project Code/Flex

PROJECT MANAGER: A.Y.
DRAWN BY: C&A
CHECKED BY: T.D.
DATE: 2024.05.17
PROJECT NUMBER: 2883-01-RC22
SHEET: FP-0.0

SEISMIC NOTES

1. SWAY BRACES SHALL BE DESIGNED AND INSTALLED IN COMPLIANCE WITH NFPA 13. CALCULATION BASED ON ZONE OF INFLUENCE.(SEE DETAIL SHEET FOR SEISMIC BRACING CALCULATION)
2. LATERAL BRACE SHALL NOT APPLY TO PIPES INDIVIDUALLY SUPPORTED BY RODS LESS THAN 6 IN. LONG MEASURED BETWEEN THE TOP OF THE PIPE AND THE POINT OF ATTACHMENT TO THE BUILDING STRUCTURE. PER NFPA 13.
3. LATERAL BRACE SHALL NOT APPLY WHERE U-TYPE HOOKS OF THE WRAP-AROUND TYPE OR THOSE U-TYPE HOOKS ARRANGED TO KEEP THE PIPE TIGHT TO THE UNDERSIDE OF THE STRUCTURE ELEMENT SHALL BE PERMITTED TO BE USED TO SATISFY THE REQUIREMENTS FOR LATERAL SWAY BRACE BRACING, PROVIDED THE LEGS ARE BENT OUT AT LEAST 30 DEGREES FROM THE VERTICAL. PER NFPA 13.

HANGER NOTES

1. 3/8" ALL-THREADED ROD (ATR) ROD SHALL BE USED ON PIPES 1 TO 4 INCHES. 1/2" ATR FOR 5, 6 & 8 INCHES PIPE, AND 5/8" ATR FOR 10 & 12 INCHES PIPE.
2. THE MAX. UNSUPPORTED LENGTH FROM THE END OF A LINE TO HANGER SHALL BE 36" FOR 1", 48" FOR 1¼, 60" FOR 1½" PIPE AND ABOVE.
3. THE MAXIMUM HANGER SPACING SHALL BE 12 FT. FOR 1" TO 1¼" PIPE, 15 FT. FOR 1½" PIPE AND ABOVE EXCEPT THREADED LIGHT WALL. FOR THREADED LIGHT WALL MAXIMUM SPACING IS 12 FT. FOR PIPE UP TO 3 IN.(UNLESS NOTED OTHERWISE).
4. HANGERS ARE REQUIRED ON ARM-OVER EXCEEDING 2 FT. FROM CENTER TO CENTER
5. ALL HANGERS SHALL BE IN ACCORDANCE WITH NFPA-13. ALL ARM-OVER MORE THAN 2'-0 SHALL HAVE HANGER. IF STATIC PRESSURE EXCEEDS 100 PSI, HANGER IS REQUIRED ON ARM-OVER MORE THAN 1'-0".
6. RESTRAINT OF BRANCH LINES SHALL NOT APPLY TO PIPES INDIVIDUALLY SUPPORTED BY RODS LESS THAN 6 IN. LONG MEASURED BETWEEN THE TOP OF THE PIPE AND THE POINT OF ATTACHMENT TO THE BUILDING STRUCTURE. PER NFPA 13.

KEY PLAN

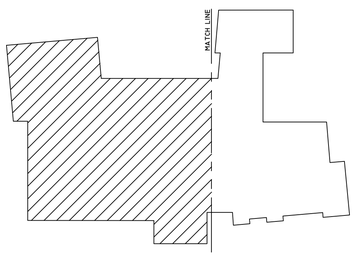

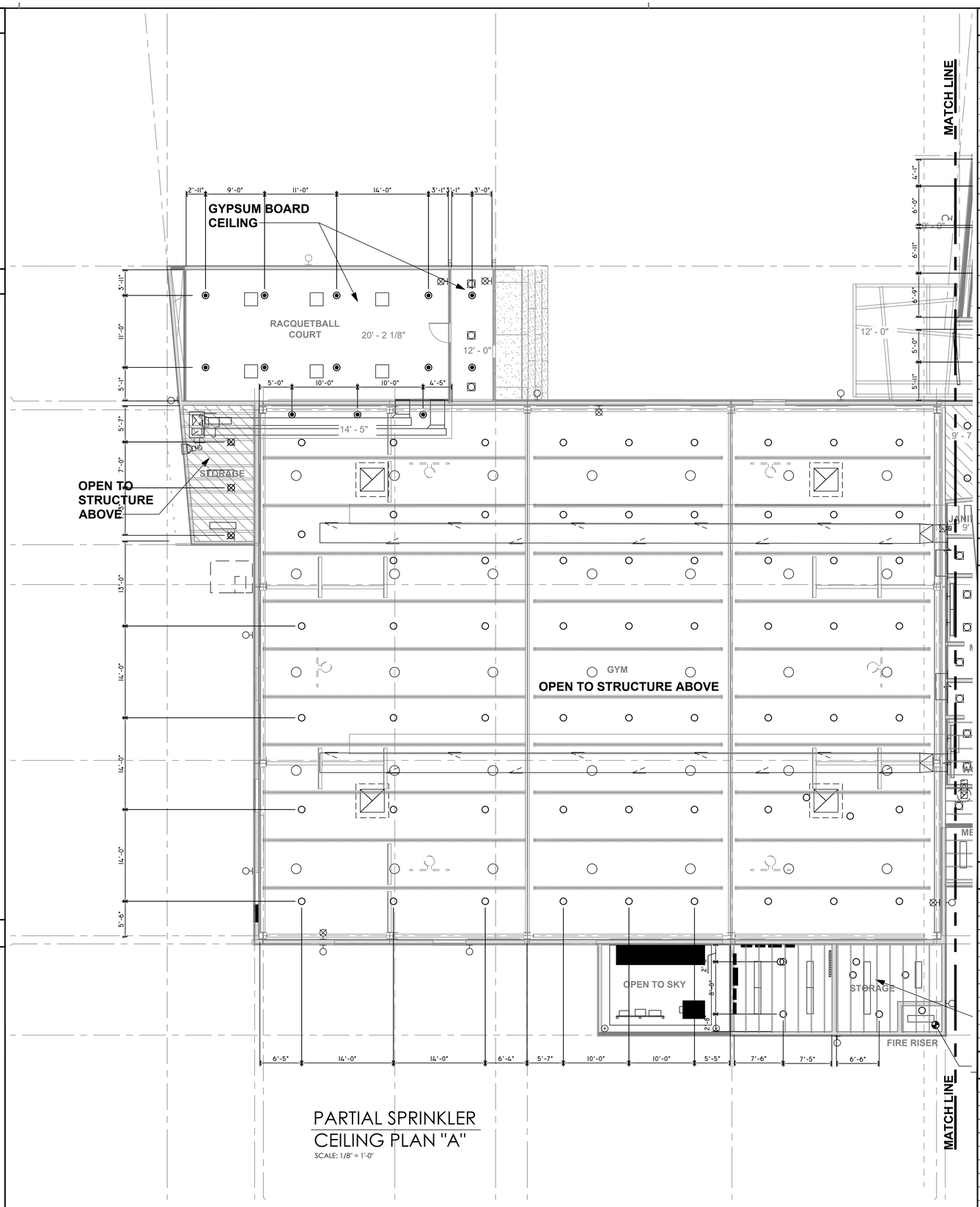

PARTIAL SPRINKLER CEILING PLAN "A"

SCALE: 1/8" = 1'-0"

LEGEND & SYMBOLS

	SPRINKLER RISER, SEE DETAIL #1
	QUICK RESPONSE CONCEALED SPRINKLER - 155°
	QUICK RESPONSE UPRIGHT SPRINKLER - 155°
	QUICK RESPONSE UPRIGHT SPRINKLER - 200°
	TYP. HANGER SYMBOL, SEE DETAILS
	PIPE RESTRAINT, SEE DETAILS
	SPRINKLER BELL
	PIPE UP OR DOWN
00	HYDRAULIC REFERENCE NODE
	NEW SPRINKLER PIPE
AIR	AUTOMATIC AIR VENT, SEE DETAILS
	LATERAL BRACE
	LONGITUDINAL BRACE
	4-WAY EARTHQUAKE BRACE

SPRINKLER INFO.

SYM.	MANUFACTURER	SIN	NPT	K	TEMP	DESCRIPTION	QTY.
	VICTAULIC	V2708	½	5.6	155	QUICK RESPONSE PENDENT SPRINKLER	55
	VICTAULIC	V2708	½	5.6	200	QUICK RESPONSE PENDENT SPRINKLER	3
	VICTAULIC	V2704	½	5.6	200	QUICK RESPONSE UPRIGHT	119
						TOTAL	177

NOTE TO CONTRACTOR

1. ALL PIPE DIMENSIONS ARE CENTER-TO-CENTER.
2. LATERAL BRACE SHALL NOT BE REQUIRED ON MAIN AND BRANCH LINES, IF ALL HANGER RODS ARE 6 IN OR LESS. MEASURED BETWEEN THE TOP OF THE PIPE AND THE POINT OF ATTACHMENT TO THE BUILDING STRUCTURE.
3. PIPING IS SHOWN AS NEAR AS POSSIBLE. HOWEVER EXACT LOCATIONS WITH REGARDS TO THE BUILDING STRUCTURE SHALL BE VERIFIED AND DETERMINED IN THE FIELD PRIOR TO FABRICATION AND INSTALLATION.
4. CONTRACTOR TO BE RESPONSIBLE FOR INSTALLING COMPLETE INSTALLATION AND SHALL CONFIRM AS-BUILT CONDITIONS PRIOR TO ANY WORK.
5. CONTRACTOR SHALL VERIFY EXACT LOCATION OF ALL POSSIBLY INTERFERING PIPING, STRUCTURAL STEEL AND MISCELLANEOUS ITEMS BEFORE INSTALLATION OF SPRINKLER SYSTEMS TO AVOID INTERFERENCE.
6. SURFACE MOUNTED FIXTURES PLACED ON THE CEILING CREATING AN OBSTRUCTION TO FIRE SPRINKLERS COVERAGE, SHALL COMPLY WITH NFPA 13 REQUIREMENTS.

BRACING LEGEND

SB1	LATERAL BRACING AT 20'-0 O.C. ATTACHED TO BOTTOM OF W-BEAM
SB2	LONGITUDINAL BRACING AT 40'-0 O.C. ATTACHED TO BOTTOM OF W-BEAM
SB3	LATERAL BRACING AT 20'-0 O.C. ATTACHED TO BOTTOM OF W-BEAM
SB4	LONGITUDINAL BRACING AT 40'-0 O.C. ATTACHED TO BOTTOM OF W-BEAM

SHEET INDEX

FP-0.0	SPRINKLER FIRE WATER SITE PLAN AND GENERAL NOTES
FP-1.0	PARTIAL SPRINKLER CEILING PLAN "A"
FP-1.1	PARTIAL SPRINKLER CEILING PLAN "B"
FP-2.0	PARTIAL SPRINKLER PIPING PLAN "A"
FP-2.1	PARTIAL SPRINKLER PIPING PLAN "B"
FP-3.0	BUILDING SECTIONS
FP-3.1	BUILDING SECTIONS
FP-4.0	DETAILS AND MANUFACTURER'S DATA SHEET
FP-5.0	MANUFACTURER'S DATA SHEET
FP-6.0	SEISMIC BRACING CALCULATIONS

rrm design group

rrmdesign.com | (805) 543-1794
3765 SOUTH HIGUERA STREET, SUITE 102
SAN LUIS OBISPO, CA 93401

THE INCLUDED DRAWINGS, SPECIFICATIONS, IDEAS, DESIGNS AND ARRANGEMENTS REPRESENTED THEREBY ARE AND SHALL REMAIN THE PROPERTY OF RRM DESIGN GROUP. THEY ARE NOT TO BE USED IN WHOLE OR IN PART FOR ANY OTHER PROJECT USED IN CONNECTION WITH ANY WORK OR PROJECT OTHER THAN THE SPECIFIED PROJECT FOR WHICH THEY HAVE BEEN PREPARED AND DEVELOPED WITHOUT THE WRITTEN CONSENT OF RRM DESIGN GROUP. VISUAL CONTACT WITH THESE DRAWINGS OR SPECIFICATIONS SHALL CONSTITUTE CONCLUSIVE EVIDENCE OF ACCEPTANCE OF THESE RESTRICTIONS. THE SALE OF A PRINTED OR REPRODUCED COPY OF THESE DOCUMENTS SHALL NOT BE CONSIDERED A WAIVER OF RRM DESIGN GROUP'S RIGHTS.
RRM DESIGN GROUP COPYRIGHT 2023.
RRM IS A CALIFORNIA CORPORATION

CONSULTANT

COLLINGS & ASSOCIATES
FIRE PROTECTION ENGINEERING
260 MAPLE COURT, 241 VENTURA, CA 93003
PHONE: (805)658-0003 FAX: (805)658-0044
www.collingsandassociates.com

REGISTERED PROFESSIONAL ENGINEER
TIM EDELMAN
No. 15847
EXPIRES ON: 6/30/2024
FIRE PROTECTION
STATE OF CALIFORNIA

PORTERVILLE COMMUNITY CENTER AND PARK

HENDERSON AVE., PORTERVILLE, CA 93257

PARTIAL SPRINKLER CEILING PLAN "A"

NO.	REVISION	DATE

Project Code/Flex

PROJECT MANAGER: A.Y.

DRAWN BY: C&A | CHECKED BY: T.D.

DATE: 2024.05.17

PROJECT NUMBER: 2883-01-RC22

SHEET: FP-1.0

PLAN CHECK REVISION 1

SEISMIC NOTES

1. SWAY BRACES SHALL BE DESIGNED AND INSTALLED IN COMPLIANCE WITH NFPA 13. CALCULATION BASED ON ZONE OF INFLUENCE.(SEE DETAIL SHEET FOR SEISMIC BRACING CALCULATION)
2. LATERAL BRACE SHALL NOT APPLY TO PIPES INDIVIDUALLY SUPPORTED BY RODS LESS THAN 6 IN. LONG MEASURED BETWEEN THE TOP OF THE PIPE AND THE POINT OF ATTACHMENT TO THE BUILDING STRUCTURE. PER NFPA 13.
3. LATERAL BRACE SHALL NOT APPLY WHERE U-TYPE HOOKS OF THE WRAP-AROUND TYPE OR THOSE U-TYPE HOOKS ARRANGED TO KEEP THE PIPE TIGHT TO THE UNDERSIDE OF THE STRUCTURE ELEMENT SHALL BE PERMITTED TO BE USED TO SATISFY THE REQUIREMENTS FOR LATERAL SWAY BRACE BRACING, PROVIDED THE LEGS ARE BENT OUT AT LEAST 30 DEGREES FROM THE VERTICAL. PER NFPA 13.

HANGER NOTES

1. 3/8" ALL-THREADED ROD (ATR) ROD SHALL BE USED ON PIPES 1 TO 4 INCHES. ½" ATR FOR 5, 6 & 8 INCHES PIPE, AND 5/8" ATR FOR 10 & 12 INCHES PIPE.
2. THE MAX. UNSUPPORTED LENGTH FROM THE END OF A LINE TO HANGER SHALL BE 36" FOR 1", 48" FOR 1¼, 60" FOR 1½" PIPE AND ABOVE.
3. THE MAXIMUM HANGER SPACING SHALL BE 12 FT. FOR 1" TO 1¼" PIPE, 15 FT. FOR 1½" PIPE AND ABOVE EXCEPT THREADED LIGHT WALL. FOR THREADED LIGHT WALL MAXIMUM SPACING IS 12 FT. FOR PIPE UP TO 3 IN.(UNLESS NOTED OTHERWISE).
4. HANGERS ARE REQUIRED ON ARM-OVER EXCEEDING 2 FT. FROM CENTER TO CENTER
5. ALL HANGERS SHALL BE IN ACCORDANCE WITH NFPA-13. ALL ARM-OVER MORE THAN 2'-0 SHALL HAVE HANGER. IF STATIC PRESSURE EXCEEDS 100 PSI, HANGER IS REQUIRED ON ARM-OVER MORE THAN 1'-0".
6. RESTRAINT OF BRANCH LINES SHALL NOT APPLY TO PIPES INDIVIDUALLY SUPPORTED BY RODS LESS THAN 6 IN. LONG MEASURED BETWEEN THE TOP OF THE PIPE AND THE POINT OF ATTACHMENT TO THE BUILDING STRUCTURE. PER NFPA 13.

KEY PLAN

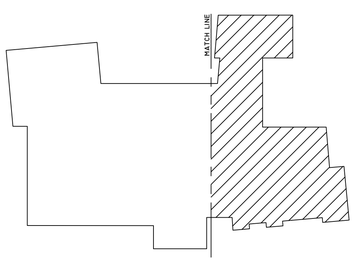

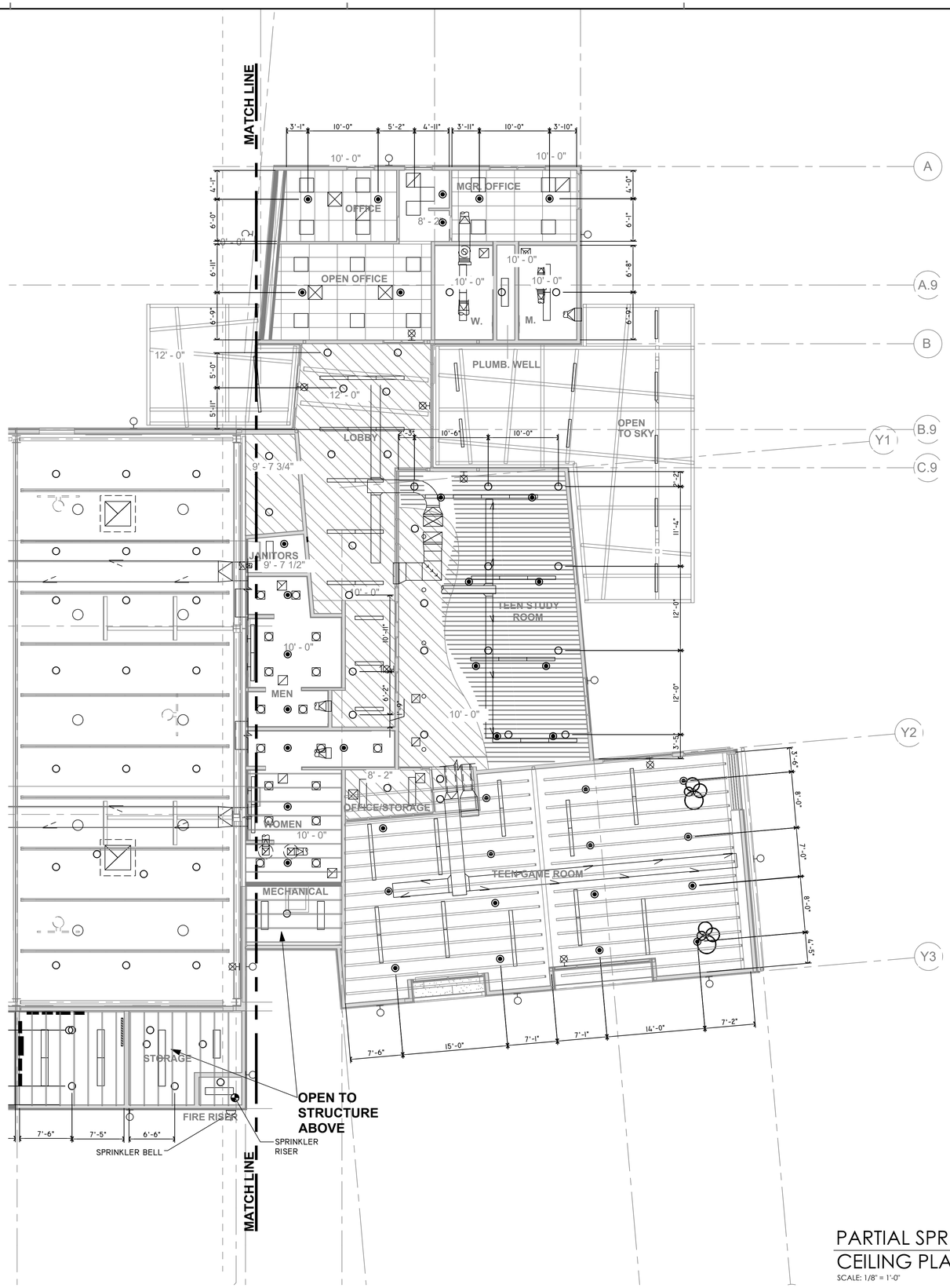

PARTIAL SPRINKLER CEILING PLAN "B"

SCALE: 1/8" = 1'-0"

LEGEND & SYMBOLS

	SPRINKLER RISER, SEE DETAIL #1
	QUICK RESPONSE CONCEALED SPRINKLER - 155°
	QUICK RESPONSE UPRIGHT SPRINKLER - 155°
	QUICK RESPONSE UPRIGHT SPRINKLER - 200°
	TYP. HANGER SYMBOL, SEE DETAILS
	PIPE RESTRAINT, SEE DETAILS
	SPRINKLER BELL
	PIPE UP OR DOWN
00	HYDRAULIC REFERENCE NODE
	NEW SPRINKLER PIPE
AIR	AUTOMATIC AIR VENT, SEE DETAILS
	LATERAL BRACE
	LONGITUDINAL BRACE
	4-WAY EARTHQUAKE BRACE

SPRINKLER INFO.

SYM.	MANUFACTURER	SIN	NPT	K	TEMP	DESCRIPTION	QTY.
	VICTAULIC	V2708	½	5.6	155	QUICK RESPONSE PENDENT SPRINKLER	55
	VICTAULIC	V2708	½	5.6	200	QUICK RESPONSE PENDENT SPRINKLER	3
	VICTAULIC	V2704	½	5.6	200	QUICK RESPONSE UPRIGHT	119
						TOTAL	177

NOTE TO CONTRACTOR

1. ALL PIPE DIMENSIONS ARE CENTER-TO-CENTER.
2. LATERAL BRACE SHALL NOT BE REQUIRED ON MAIN AND BRANCH LINES, IF ALL HANGER RODS ARE 6 IN OR LESS. MEASURED BETWEEN THE TOP OF THE PIPE AND THE POINT OF ATTACHMENT TO THE BUILDING STRUCTURE.
3. PIPING IS SHOWN AS NEAR AS POSSIBLE. HOWEVER EXACT LOCATIONS WITH REGARDS TO THE BUILDING STRUCTURE SHALL BE VERIFIED AND DETERMINED IN THE FIELD PRIOR TO FABRICATION AND INSTALLATION.
4. CONTRACTOR TO BE RESPONSIBLE FOR INSTALLING COMPLETE INSTALLATION AND SHALL CONFIRM AS-BUILT CONDITIONS PRIOR TO ANY WORK.
5. CONTRACTOR SHALL VERIFY EXACT LOCATION OF ALL POSSIBLY INTERFERING PIPING, STRUCTURAL STEEL AND MISCELLANEOUS ITEMS BEFORE INSTALLATION OF SPRINKLER SYSTEMS TO AVOID INTERFERENCE.
6. SURFACE MOUNTED FIXTURES PLACED ON THE CEILING CREATING AN OBSTRUCTION TO FIRE SPRINKLERS COVERAGE, SHALL COMPLY WITH NFPA 13 REQUIREMENTS.

BRACING LEGEND

SB1	LATERAL BRACING AT 20'-0 O.C. ATTACHED TO BOTTOM OF W-BEAM
SB2	LONGITUDINAL BRACING AT 40'-0 O.C. ATTACHED TO BOTTOM OF W-BEAM
SB3	LATERAL BRACING AT 20'-0 O.C. ATTACHED TO BOTTOM OF W-BEAM
SB4	LONGITUDINAL BRACING AT 40'-0 O.C. ATTACHED TO BOTTOM OF W-BEAM

SHEET INDEX

FP-0.0	SPRINKLER FIRE WATER SITE PLAN AND GENERAL NOTES
FP-1.0	PARTIAL SPRINKLER CEILING PLAN "A"
FP-1.1	PARTIAL SPRINKLER CEILING PLAN "B"
FP-2.0	PARTIAL SPRINKLER PIPING PLAN "A"
FP-2.1	PARTIAL SPRINKLER PIPING PLAN "B"
FP-3.0	BUILDING SECTIONS
FP-3.1	BUILDING SECTIONS
FP-4.0	DETAILS AND MANUFACTURER'S DATA SHEET
FP-5.0	MANUFACTURER'S DATA SHEET
FP-6.0	SEISMIC BRACING CALCULATIONS

rrm design group

rrmdesign.com | (805) 543-1794
3765 SOUTH HIGUERA STREET, SUITE 102
SAN LUIS OBISPO, CA 93401

THE INCLUDED DRAWINGS, SPECIFICATIONS, IDEAS, DESIGNS AND ARRANGEMENTS REPRESENTED THEREBY ARE AND SHALL REMAIN THE PROPERTY OF RRM DESIGN GROUP AND NO PART THEREOF SHALL BE COPIED, DISCLOSED TO OTHERS OR USED IN CONNECTION WITH ANY WORK OR PROJECT OTHER THAN THE SPECIFIED PROJECT FOR WHICH THEY HAVE BEEN PREPARED AND DEVELOPED WITHOUT THE WRITTEN CONSENT OF RRM DESIGN GROUP. VISUAL CONTACT WITH THESE DRAWINGS OR SPECIFICATIONS SHALL CONSTITUTE CONCLUSIVE EVIDENCE OF ACCEPTANCE OF THESE RESTRICTIONS. ANY REPRODUCTION OF THESE DRAWINGS OR SPECIFICATIONS SHALL NOT BE CONSIDERED A WAIVER OF RRM DESIGN GROUP'S RIGHTS.

RRM DESIGN GROUP COPYRIGHT 2023.
RRM IS A CALIFORNIA CORPORATION

CONSULTANT

COLLINGS & ASSOCIATES
FIRE PROTECTION ENGINEERING
260 MAPLE COURT, 241 VENTURA, CA 93003
PHONE: (805)658-0003 FAX: (805)658-0044
www.collingsandassociates.com

REGISTERED PROFESSIONAL ENGINEER
DAVID EDELMAN
CE 1847
EXPIRES ON: 6/30/2024
FIRE PROTECTION
STATE OF CALIFORNIA

PLAN CHECK REVISION 1

PORTERVILLE COMMUNITY CENTER AND PARK

HENDERSON AVE., PORTERVILLE, CA 93257

PARTIAL SPRINKLER CEILING PLAN "B"

NO.	REVISION	DATE

Project Code/Flex

PROJECT MANAGER: A.Y.

DRAWN BY: C.&A | CHECKED BY: T.D.

DATE: 2024.05.17

PROJECT NUMBER: 2883-01-RC22

SHEET: FP-1.1

SEISMIC NOTES

1. SWAY BRACES SHALL BE DESIGNED AND INSTALLED IN COMPLIANCE WITH NFPA 13. CALCULATION BASED ON ZONE OF INFLUENCE.(SEE DETAIL SHEET FOR SEISMIC BRACING CALCULATION)
2. LATERAL BRACE SHALL NOT APPLY TO PIPES INDIVIDUALLY SUPPORTED BY RODS LESS THAN 6 IN. LONG MEASURED BETWEEN THE TOP OF THE PIPE AND THE POINT OF ATTACHMENT TO THE BUILDING STRUCTURE. PER NFPA 13.
3. LATERAL BRACE SHALL NOT APPLY WHERE U-TYPE HOOKS OF THE WRAP-AROUND TYPE OR THOSE U-TYPE HOOKS ARRANGED TO KEEP THE PIPE TIGHT TO THE UNDERSIDE OF THE STRUCTURE ELEMENT SHALL BE PERMITTED TO BE USED TO SATISFY THE REQUIREMENTS FOR LATERAL SWAY BRACE BRACING, PROVIDED THE LEGS ARE BENT OUT AT LEAST 30 DEGREES FROM THE VERTICAL. PER NFPA 13.

HANGER NOTES

1. 3/8" ALL-THREADED ROD (ATR) ROD SHALL BE USED ON PIPES 1 TO 4 INCHES. ½" ATR FOR 5, 6 & 8 INCHES PIPE, AND 5/8" ATR FOR 10 & 12 INCHES PIPE.
2. THE MAX. UNSUPPORTED LENGTH FROM THE END OF A LINE TO HANGER SHALL BE 36" FOR 1", 48" FOR 1¼, 60" FOR 1½" PIPE AND ABOVE.
3. THE MAXIMUM HANGER SPACING SHALL BE 12 FT. FOR 1" TO 1¼" PIPE, 15 FT. FOR 1½" PIPE AND ABOVE EXCEPT THREADED LIGHT WALL. FOR THREADED LIGHT WALL MAXIMUM SPACING IS 12 FT. FOR PIPE UP TO 3 IN.(UNLESS NOTED OTHERWISE).
4. HANGERS ARE REQUIRED ON ARM-OVER EXCEEDING 2 FT. FROM CENTER TO CENTER
5. ALL HANGERS SHALL BE IN ACCORDANCE WITH NFPA-13. ALL ARM-OVER MORE THAN 2'-0 SHALL HAVE HANGER. IF STATIC PRESSURE EXCEEDS 100 PSI, HANGER IS REQUIRED ON ARM-OVER MORE THAN 1'-0".
6. RESTRAINT OF BRANCH LINES SHALL NOT APPLY TO PIPES INDIVIDUALLY SUPPORTED BY RODS LESS THAN 6 IN. LONG MEASURED BETWEEN THE TOP OF THE PIPE AND THE POINT OF ATTACHMENT TO THE BUILDING STRUCTURE. PER NFPA 13.

HYDRAULIC INFORMATION

DESIGN AREA 1	WET SYSTEM
GYM	
DEMAND CALCULATIONS USING HAZEN-WILLIAMS METHOD	
OCCUPANCY CLASSIFICATION:	LIGHT HAZARD
DESIGN AREA DENSITY:	0.10 GPM
ADDITIONAL OUTSIDE HOSE:	100 GPM
DESIGN AREA SIZE:	1500 FT²
CEILING WITH SLOPE < 2-12 INCREASE OF DESIGN AREA IS NOT REQUIRED, PER NFPA 13.	

REMOTE AREA 1
HYDRAULIC INFORMATION

DATE:	12/20/2023
OCCUPANCY:	LIGHT HAZARD
LOCATION:	GYM
DENSITY:	0.10 GPM/FT²
SPRINKLER TYPE(S):	UPRIGHT
SPRINK. RESPONSE TYPE:	QUICK RESPONSE
SPRINKLER COV. AREA:	MAX 196 FT²
NO. SPRINKLER FLOWING:	9
SPRINKLER ORIFICE:	½"
K-FACTOR:	5.6
SPRINKLER TEMP:	200°
MIN. WATER REQUIRED:	19.60 GPM
MIN. PRESSURE REQUIRED:	12.20 PSI
WATER REQUIRED: (@ BASE OF RISER)	179.5 GPM
PRESSURE REQUIRED: (@ BASE OF RISER)	32.7 PSI
TOTAL HOSE STREAM:	100 GPM
SAFETY MARGIN - PSI:	+6.1 PSI
PER NFPA 13, 2022 EDITION	

KEY PLAN

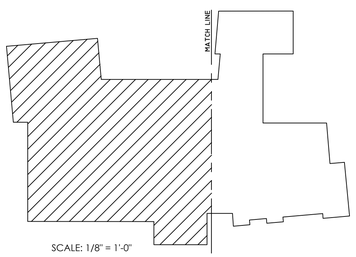

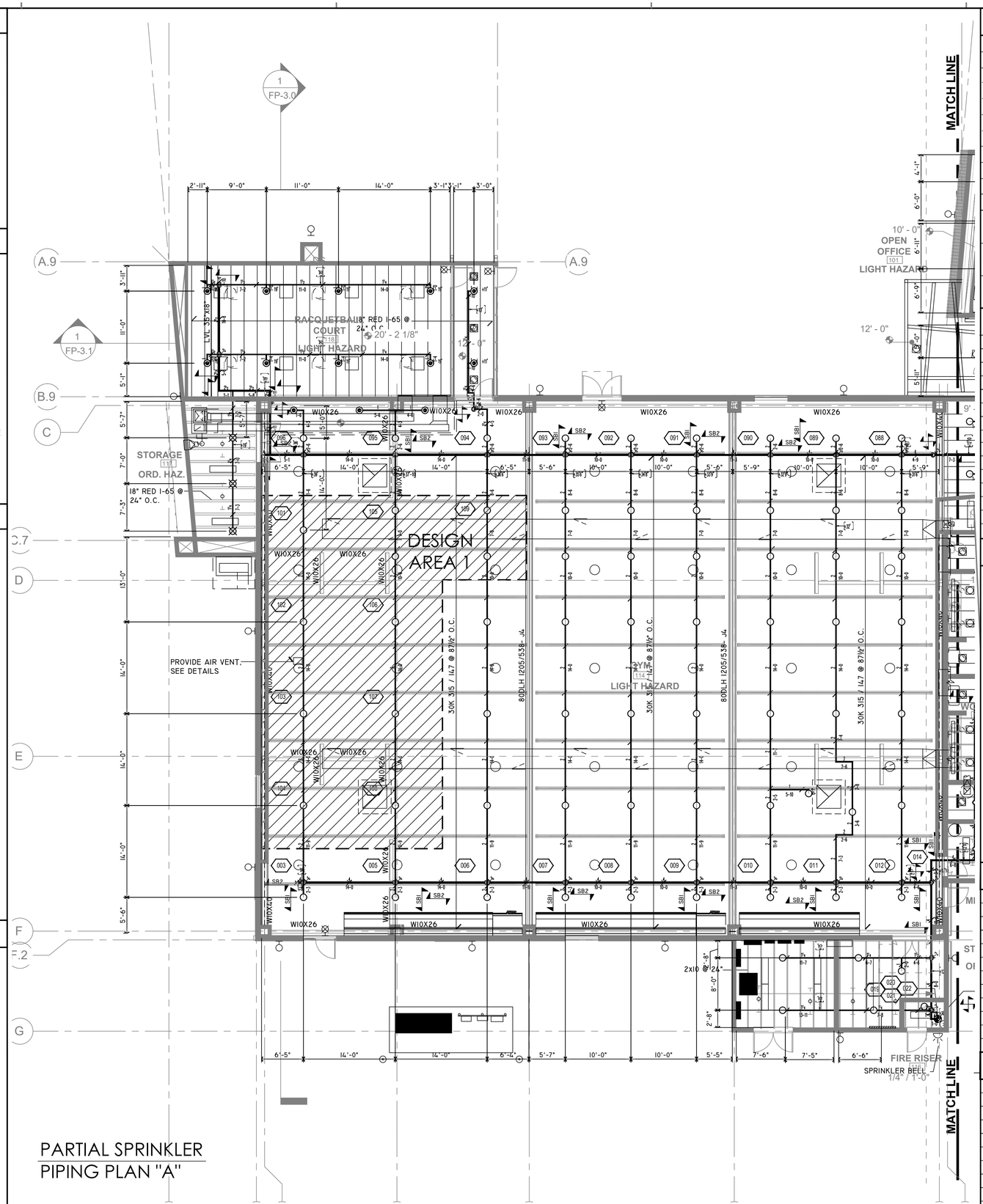

PARTIAL SPRINKLER PIPING PLAN "A"

LEGEND & SYMBOLS

	SPRINKLER RISER, SEE DETAIL #1
	QUICK RESPONSE CONCEALED SPRINKLER - 155°
	QUICK RESPONSE UPRIGHT SPRINKLER - 155°
	QUICK RESPONSE UPRIGHT SPRINKLER - 200°
	TYP. HANGER SYMBOL, SEE DETAILS
	PIPE RESTRAINT, SEE DETAILS
	SPRINKLER BELL
	PIPE UP OR DOWN
00	HYDRAULIC REFERENCE NODE
	NEW SPRINKLER PIPE
AIR	AUTOMATIC AIR VENT, SEE DETAILS
	LATERAL BRACE
	LONGITUDINAL BRACE
	4-WAY EARTHQUAKE BRACE

SPRINKLER INFO.

SYM.	MANUFACTURER	SIN	NPT	K	TEMP	DESCRIPTION	QTY.
	VICTAULIC	V2708	½	5.6	155	QUICK RESPONSE PENDENT SPRINKLER	55
	VICTAULIC	V2708	½	5.6	200	QUICK RESPONSE PENDENT SPRINKLER	3
	VICTAULIC	V2704	½	5.6	200	QUICK RESPONSE UPRIGHT	119
						TOTAL	177

NOTE TO CONTRACTOR

1. ALL PIPE DIMENSIONS ARE CENTER-TO-CENTER.
2. LATERAL BRACE SHALL NOT BE REQUIRED ON MAIN AND BRANCH LINES, IF ALL HANGER RODS ARE 6 IN OR LESS. MEASURED BETWEEN THE TOP OF THE PIPE AND THE POINT OF ATTACHMENT TO THE BUILDING STRUCTURE.
3. PIPING IS SHOWN AS NEAR AS POSSIBLE. HOWEVER EXACT LOCATIONS WITH REGARDS TO THE BUILDING STRUCTURE SHALL BE VERIFIED AND DETERMINED IN THE FIELD PRIOR TO FABRICATION AND INSTALLATION.
4. CONTRACTOR TO BE RESPONSIBLE FOR INSTALLING COMPLETE INSTALLATION AND SHALL CONFIRM AS-BUILT CONDITIONS PRIOR TO ANY WORK.
5. CONTRACTOR SHALL VERIFY EXACT LOCATION OF ALL POSSIBLY INTERFERING PIPING, STRUCTURAL STEEL AND MISCELLANEOUS ITEMS BEFORE INSTALLATION OF SPRINKLER SYSTEMS TO AVOID INTERFERENCE.
6. SURFACE MOUNTED FIXTURES PLACED ON THE CEILING CREATING AN OBSTRUCTION TO FIRE SPRINKLERS COVERAGE, SHALL COMPLY WITH NFPA 13 REQUIREMENTS.

BRACING LEGEND

SB1	LATERAL BRACING AT 20'-0 O.C. ATTACHED TO BOTTOM OF W-BEAM
SB2	LONGITUDINAL BRACING AT 40'-0 O.C. ATTACHED TO BOTTOM OF W-BEAM
SB3	LATERAL BRACING AT 20'-0 O.C. ATTACHED TO BOTTOM OF W-BEAM
SB4	LONGITUDINAL BRACING AT 40'-0 O.C. ATTACHED TO BOTTOM OF W-BEAM

SHEET INDEX

FP-0.0	SPRINKLER FIRE WATER SITE PLAN AND GENERAL NOTES
FP-1.0	PARTIAL SPRINKLER CEILING PLAN "A"
FP-1.1	PARTIAL SPRINKLER CEILING PLAN "B"
FP-2.0	PARTIAL SPRINKLER PIPING PLAN "A"
FP-2.1	PARTIAL SPRINKLER PIPING PLAN "B"
FP-3.0	BUILDING SECTIONS
FP-3.1	BUILDING SECTIONS
FP-4.0	DETAILS AND MANUFACTURER'S DATA SHEET
FP-5.0	MANUFACTURER'S DATA SHEET
FP-6.0	SEISMIC BRACING CALCULATIONS

rrm design group
rrmdesign.com | (805) 543-1794
3765 SOUTH HIGUERA STREET, SUITE 102
SAN LUIS OBISPO, CA 93401

THE INCLUDED DRAWINGS, SPECIFICATIONS, IDEAS, DESIGNS AND ARRANGEMENTS REPRESENTED THEREBY ARE AND SHALL REMAIN THE PROPERTY OF RRM DESIGN GROUP AND NO PART THEREOF SHALL BE COPIED, DISCLOSED TO OTHERS OR USED IN CONNECTION WITH ANY WORK OR PROJECT OTHER THAN THE SPECIFIED PROJECT FOR WHICH THEY HAVE BEEN PREPARED AND DEVELOPED WITHOUT THE WRITTEN CONSENT OF RRM DESIGN GROUP. VISUAL CONTACT WITH THESE DRAWINGS OR SPECIFICATIONS SHALL CONSTITUTE CONCLUSIVE EVIDENCE OF ACCEPTANCE OF THESE RESTRICTIONS. SUBMITTAL OF THESE DOCUMENTS FOR PUBLIC AGENCY REVIEW SHALL NOT BE CONSIDERED A WAIVER OF RRM DESIGN GROUP'S RIGHTS.
RRM DESIGN GROUP COPYRIGHT 2023.
RRM IS A CALIFORNIA CORPORATION

CONSULTANT

COLLINGS & ASSOCIATES
FIRE PROTECTION ENGINEERING
260 MAPLE COURT, 241 VENTURA, CA 93003
PHONE: (805)658-0003 FAX: (805)658-0044
www.collingsandassociates.com

REGISTERED PROFESSIONAL ENGINEER
TIM DEDEAUX
No. 18-1847
EXPIRES ON 6/30/2024
FIRE PROTECTION
STATE OF CALIFORNIA

PORTERVILLE COMMUNITY CENTER AND PARK

HENDERSON AVE., PORTERVILLE, CA 93257

PARTIAL SPRINKLER PIPING PLAN "B"

NO.	REVISION	DATE

Project Code/Flex

PROJECT MANAGER: A.Y.
DRAWN BY: C&A
CHECKED BY: T.D.
DATE: 2024.05.17
PROJECT NUMBER: 2883-01-RC22
SHEET: FP-2.0

PLAN CHECK REVISION 1

SEISMIC NOTES

1. SWAY BRACES SHALL BE DESIGNED AND INSTALLED IN COMPLIANCE WITH NFPA 13. CALCULATION BASED ON ZONE OF INFLUENCE.(SEE DETAIL SHEET FOR SEISMIC BRACING CALCULATION)
2. LATERAL BRACE SHALL NOT APPLY TO PIPES INDIVIDUALLY SUPPORTED BY RODS LESS THAN 6 IN. LONG MEASURED BETWEEN THE TOP OF THE PIPE AND THE POINT OF ATTACHMENT TO THE BUILDING STRUCTURE. PER NFPA 13.
3. LATERAL BRACE SHALL NOT APPLY WHERE U-TYPE HOOKS OF THE WRAP-AROUND TYPE OR THOSE U-TYPE HOOKS ARRANGED TO KEEP THE PIPE TIGHT TO THE UNDERSIDE OF THE STRUCTURE ELEMENT SHALL BE PERMITTED TO BE USED TO SATISFY THE REQUIREMENTS FOR LATERAL SWAY BRACE BRACING, PROVIDED THE LEGS ARE BENT OUT AT LEAST 30 DEGREES FROM THE VERTICAL. PER NFPA 13.

HANGER NOTES

1. 3/8" ALL-THREADED ROD (ATR) ROD SHALL BE USED ON PIPES 1 TO 4 INCHES. ½" ATR FOR 5, 6 & 8 INCHES PIPE, AND 5/8" ATR FOR 10 & 12 INCHES PIPE.
2. THE MAX. UNSUPPORTED LENGTH FROM THE END OF A LINE TO HANGER SHALL BE 36" FOR 1", 48" FOR 1¼, 60" FOR 1½" PIPE AND ABOVE.
3. THE MAXIMUM HANGER SPACING SHALL BE 12 FT. FOR 1" TO 1¼" PIPE, 15 FT. FOR 1½" PIPE AND ABOVE EXCEPT THREADED LIGHT WALL. FOR THREADED LIGHT WALL MAXIMUM SPACING IS 12 FT. FOR PIPE UP TO 3 IN.(UNLESS NOTED OTHERWISE).
4. HANGERS ARE REQUIRED ON ARM-OVER EXCEEDING 2 FT. FROM CENTER TO CENTER
5. ALL HANGERS SHALL BE IN ACCORDANCE WITH NFPA-13. ALL ARM-OVER MORE THAN 2'-0 SHALL HAVE HANGER. IF STATIC PRESSURE EXCEEDS 100 PSI, HANGER IS REQUIRED ON ARM-OVER MORE THAN 1'-0".
6. RESTRAINT OF BRANCH LINES SHALL NOT APPLY TO PIPES INDIVIDUALLY SUPPORTED BY RODS LESS THAN 6 IN. LONG MEASURED BETWEEN THE TOP OF THE PIPE AND THE POINT OF ATTACHMENT TO THE BUILDING STRUCTURE. PER NFPA 13.

HYDRAULIC INFORMATION

DESIGN AREA 3	WET SYSTEM
OFFICES	
DEMAND CALCULATIONS USING HAZEN-WILLIAMS METHOD	
OCCUPANCY CLASSIFICATION:	LIGHT HAZARD
DESIGN AREA DENSITY:	0.10 GPM
ADDITIONAL OUTSIDE HOSE:	100 GPM
DESIGN AREA SIZE:	1026 FT²

REMOTE AREA 3
HYDRAULIC INFORMATION

DATE:	12/20/2023
OCCUPANCY:	LIGHT HAZARD
LOCATION:	OFFICES
DENSITY:	0.10 GPM/FT²
SPRINKLER TYPE(S):	PENDENT
SPRINK. RESPONSE TYPE:	QUICK RESPONSE
SPRINKLER COV. AREA:	MAX 225 FT²
NO. SPRINKLER FLOWING:	10
SPRINKLER ORIFICE:	½"
K-FACTOR:	5.6
SPRINKLER TEMP:	165°
MIN. WATER REQUIRED:	14.8 GPM
MIN. PRESSURE REQUIRED:	7.0 PSI
WATER REQUIRED: (@ BASE OF RISER)	160.5 GPM
PRESSURE REQUIRED: (@ BASE OF RISER)	20.7 PSI
TOTAL HOSE STREAM:	100 GPM
SAFETY MARGIN - PSI:	+18.5 PSI
PER NFPA 13, 2022 EDITION	

KEY PLAN

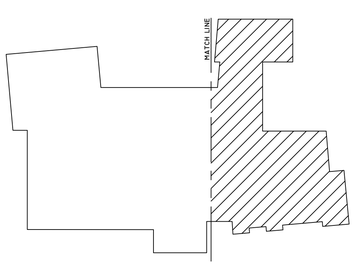

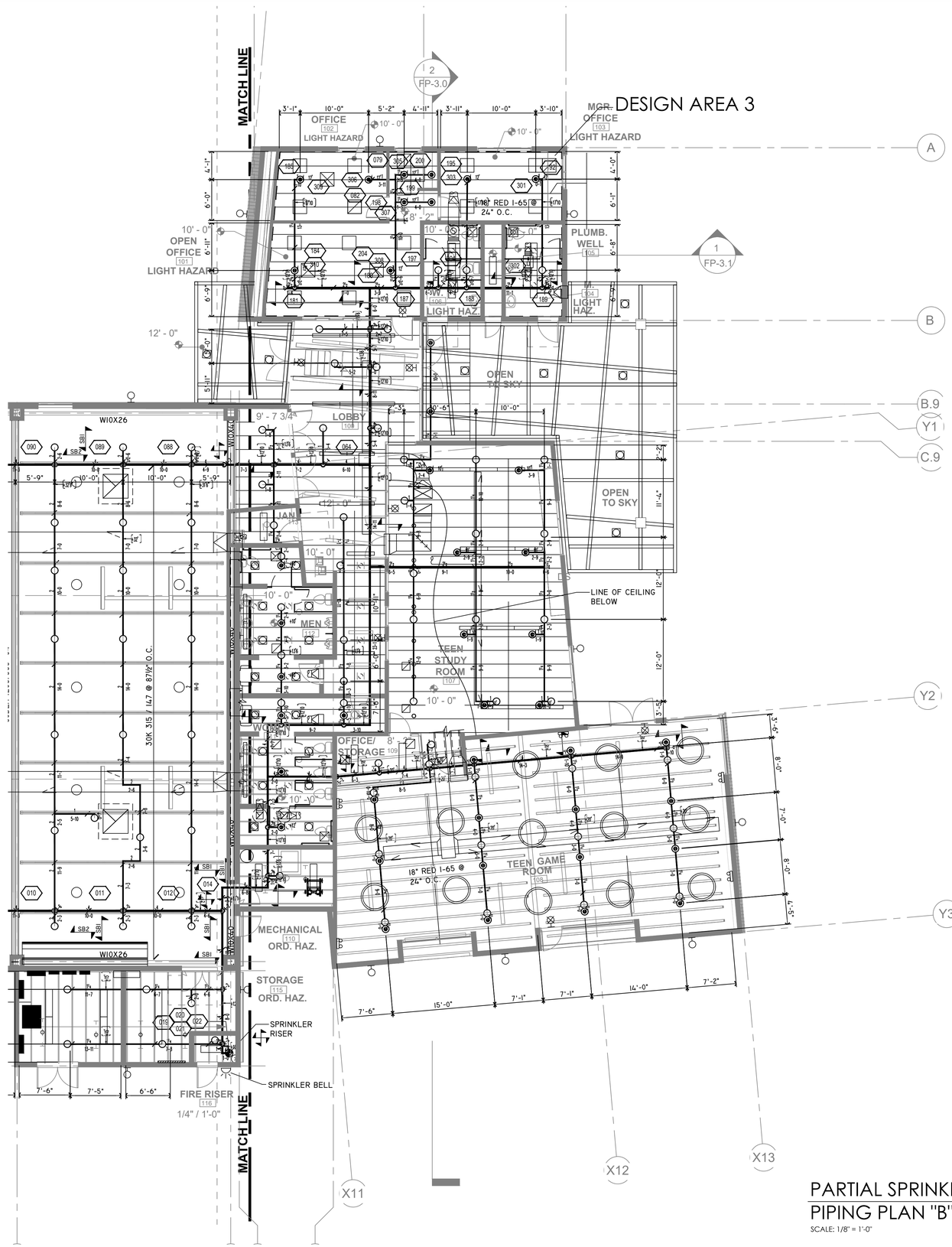

PARTIAL SPRINKLER PIPING PLAN "B"
SCALE: 1/8" = 1'-0"

LEGEND & SYMBOLS

	SPRINKLER RISER, SEE DETAIL #1
	QUICK RESPONSE CONCEALED SPRINKLER - 155°
	QUICK RESPONSE UPRIGHT SPRINKLER - 155°
	QUICK RESPONSE UPRIGHT SPRINKLER - 200°
	TYP. HANGER SYMBOL, SEE DETAILS
	PIPE RESTRAINT, SEE DETAILS
	SPRINKLER BELL
	PIPE UP OR DOWN
00	HYDRAULIC REFERENCE NODE
	NEW SPRINKLER PIPE
AIR	AUTOMATIC AIR VENT, SEE DETAILS
	LATERAL BRACE
	LONGITUDINAL BRACE
	4-WAY EARTHQUAKE BRACE

SPRINKLER INFO.

SYM.	MANUFACTURER	SIN	NPT	K	TEMP	DESCRIPTION	QTY.
	VICTAULIC	V2708	½	5.6	155	QUICK RESPONSE PENDENT SPRINKLER	55
	VICTAULIC	V2708	½	5.6	200	QUICK RESPONSE PENDENT SPRINKLER	3
	VICTAULIC	V2704	½	5.6	200	QUICK RESPONSE UPRIGHT	119
						TOTAL	177

NOTE TO CONTRACTOR

1. ALL PIPE DIMENSIONS ARE CENTER-TO-CENTER.
2. LATERAL BRACE SHALL NOT BE REQUIRED ON MAIN AND BRANCH LINES, IF ALL HANGER RODS ARE 6 IN OR LESS. MEASURED BETWEEN THE TOP OF THE PIPE AND THE POINT OF ATTACHMENT TO THE BUILDING STRUCTURE.
3. PIPING IS SHOWN AS NEAR AS POSSIBLE. HOWEVER EXACT LOCATIONS WITH REGARDS TO THE BUILDING STRUCTURE SHALL BE VERIFIED AND DETERMINED IN THE FIELD PRIOR TO FABRICATION AND INSTALLATION.
4. CONTRACTOR TO BE RESPONSIBLE FOR INSTALLING COMPLETE INSTALLATION AND SHALL CONFIRM AS-BUILT CONDITIONS PRIOR TO ANY WORK.
5. CONTRACTOR SHALL VERIFY EXACT LOCATION OF ALL POSSIBLY INTERFERING PIPING, STRUCTURAL STEEL AND MISCELLANEOUS ITEMS BEFORE INSTALLATION OF SPRINKLER SYSTEMS TO AVOID INTERFERENCE.
6. SURFACE MOUNTED FIXTURES PLACED ON THE CEILING CREATING AN OBSTRUCTION TO FIRE SPRINKLERS COVERAGE, SHALL COMPLY WITH NFPA 13 REQUIREMENTS.

BRACING LEGEND

SB1	LATERAL BRACING AT 20'-0 O.C. ATTACHED TO BOTTOM OF W-BEAM
SB2	LONGITUDINAL BRACING AT 40'-0 O.C. ATTACHED TO BOTTOM OF W-BEAM
SB3	LATERAL BRACING AT 20'-0 O.C. ATTACHED TO BOTTOM OF W-BEAM
SB4	LONGITUDINAL BRACING AT 40'-0 O.C. ATTACHED TO BOTTOM OF W-BEAM

SHEET INDEX

FP-0.0	SPRINKLER FIRE WATER SITE PLAN AND GENERAL NOTES
FP-1.0	PARTIAL SPRINKLER CEILING PLAN "A"
FP-1.1	PARTIAL SPRINKLER CEILING PLAN "B"
FP-2.0	PARTIAL SPRINKLER PIPING PLAN "A"
FP-2.1	PARTIAL SPRINKLER PIPING PLAN "B"
FP-3.0	BUILDING SECTIONS
FP-3.1	BUILDING SECTIONS
FP-4.0	DETAILS AND MANUFACTURER'S DATA SHEET
FP-5.0	MANUFACTURER'S DATA SHEET
FP-6.0	SEISMIC BRACING CALCULATIONS

PLAN CHECK REVISION 1

rrm design group
rrmdesign.com | (805) 543-1794
3765 SOUTH HIGUERA STREET, SUITE 102
SAN LUIS OBISPO, CA 93401

THE INCLUDED DRAWINGS, SPECIFICATIONS, IDEAS, DESIGNS AND ARRANGEMENTS REPRESENTED THEREBY ARE AND SHALL REMAIN THE PROPERTY OF RRM DESIGN GROUP. THEY ARE NOT TO BE USED IN WHOLE OR IN PART FOR ANY OTHER PROJECT USED IN CONNECTION WITH ANY WORK OR PROJECT OTHER THAN THE SPECIFIED PROJECT FOR WHICH THEY HAVE BEEN PREPARED AND DEVELOPED WITHOUT THE WRITTEN CONSENT OF RRM DESIGN GROUP. VISUAL CONTACT WITH THESE DRAWINGS OR SPECIFICATIONS SHALL CONSTITUTE CONCLUSIVE EVIDENCE OF ACCEPTANCE OF THESE RESTRICTIONS. THE SALE OF PRINTS OF THESE DRAWINGS OR SPECIFICATIONS SHALL NOT BE CONSIDERED A WAIVER OF RRM DESIGN GROUP'S RIGHTS.
RRM DESIGN GROUP COPYRIGHT 2023.
RRM IS A CALIFORNIA CORPORATION

CONSULTANT

COLLINGS & ASSOCIATES
FIRE PROTECTION ENGINEERING
260 MAPLE COURT, 241 VENTURA, CA 93003
PHONE: (805)658-0003 FAX: (805)658-0044
www.collingsandassociates.com

REGISTERED PROFESSIONAL ENGINEER
TED EDELMAN
No. 18847
EXPIRES ON: 6/30/2024
FIRE PROTECTION
STATE OF CALIFORNIA

PORTERVILLE COMMUNITY CENTER AND PARK
HENDERSON AVE., PORTERVILLE, CA 93257

PARTIAL SPRINKLER PIPING PLAN "A"

NO.	REVISION	DATE

Project Code/Flex

PROJECT MANAGER: A.Y.
DRAWN BY: C&A
CHECKED BY: T.D.
DATE: 2024.05.17
PROJECT NUMBER: 2883-01-RC22
SHEET: FP-2.1

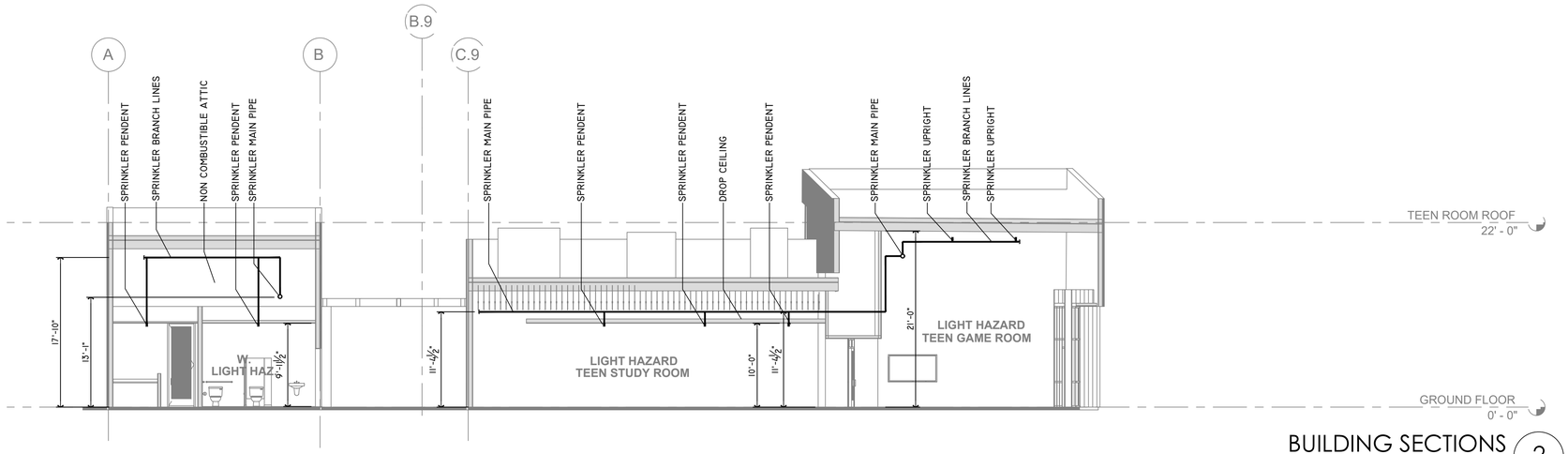

BUILDING SECTIONS 2

SCALE: 1/8" = 1'-0"

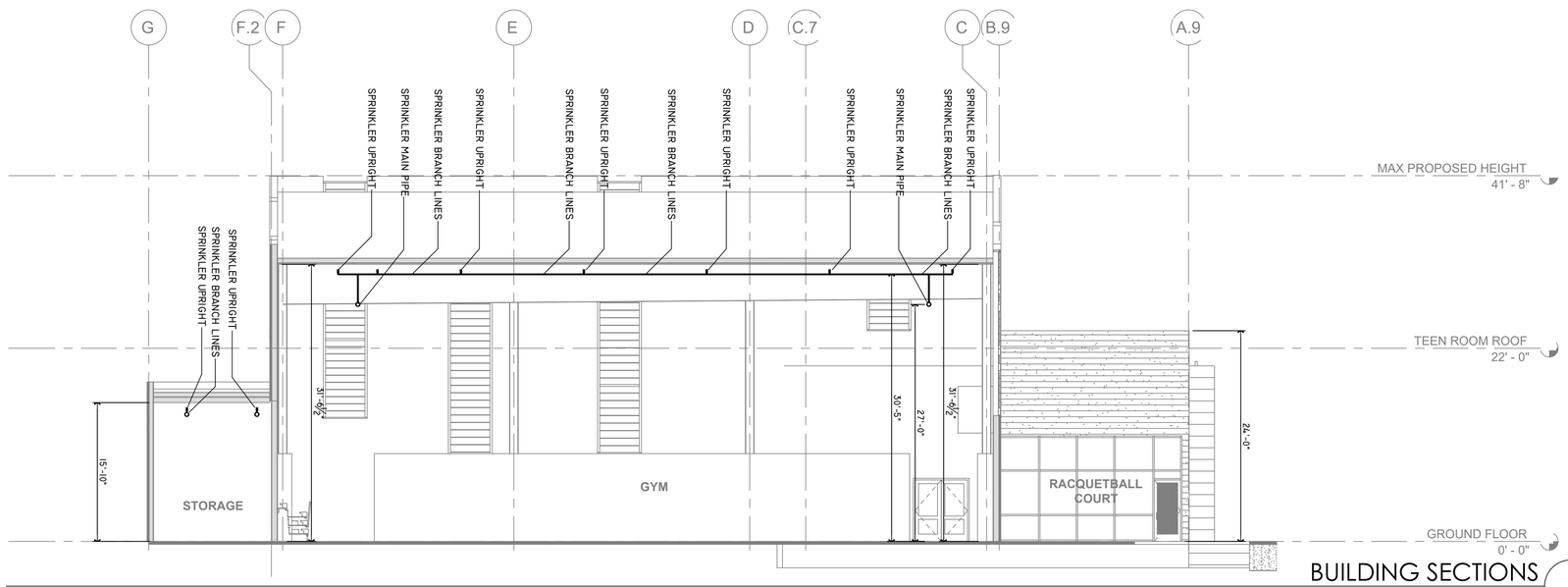

BUILDING SECTIONS 1

SCALE: 1/8" = 1'-0"

rrm design group

rrmdesign.com | (805) 543-1794
3765 SOUTH HIGUERA STREET, SUITE 102
SAN LUIS OBISPO, CA 93401

THE INCLUDED DRAWINGS, SPECIFICATIONS, IDEAS, DESIGNS AND ARRANGEMENTS REPRESENTED THEREBY ARE AND SHALL REMAIN THE PROPERTY OF RRM DESIGN GROUP AND NO PART THEREOF SHALL BE COPIED, DISCLOSED TO OTHERS OR USED IN CONNECTION WITH ANY WORK OR PROJECT OTHER THAN THE SPECIFIED PROJECT FOR WHICH THEY HAVE BEEN PREPARED AND DEVELOPED WITHOUT THE WRITTEN CONSENT OF RRM DESIGN GROUP. VISUAL CONTACT WITH THESE DRAWINGS OR SPECIFICATIONS SHALL CONSTITUTE CONCLUSIVE EVIDENCE OF ACCEPTANCE OF THESE RESTRICTIONS. SUBMITTAL OF THESE DOCUMENTS FOR PUBLIC AGENCY REVIEW SHALL NOT BE CONSIDERED A WAIVER OF RRM DESIGN GROUP'S RIGHTS.

RRM DESIGN GROUP COPYRIGHT 2023.
RRM IS A CALIFORNIA CORPORATION

CONSULTANT

COLLINGS & ASSOCIATES
FIRE PROTECTION ENGINEERING
260 MAPLE COURT, 241 VENTURA, CA 93003
PHONE: (805)658-0003 FAX: (805)658-0044
www.collingsandassociates.com

LICENSED PROFESSIONAL ENGINEER
D. TED EDELMANN
TR 1847
EXPIRES ON: 6/30/2024
FIRE PROTECTION
STATE OF CALIFORNIA

PORTERVILLE COMMUNITY CENTER AND PARK
HENDERSON AVE., PORTERVILLE, CA 93257

BUILDING SECTIONS

NO.	REVISION	DATE
△		
△		
△		
△		
△		
△		

Project Code/Flex

PROJECT MANAGER
A.Y.

DRAWN BY
C&A

CHECKED BY
T.D.

DATE
2024.05.17

PROJECT NUMBER
2883-01-RC22

SHEET
FP-3.0

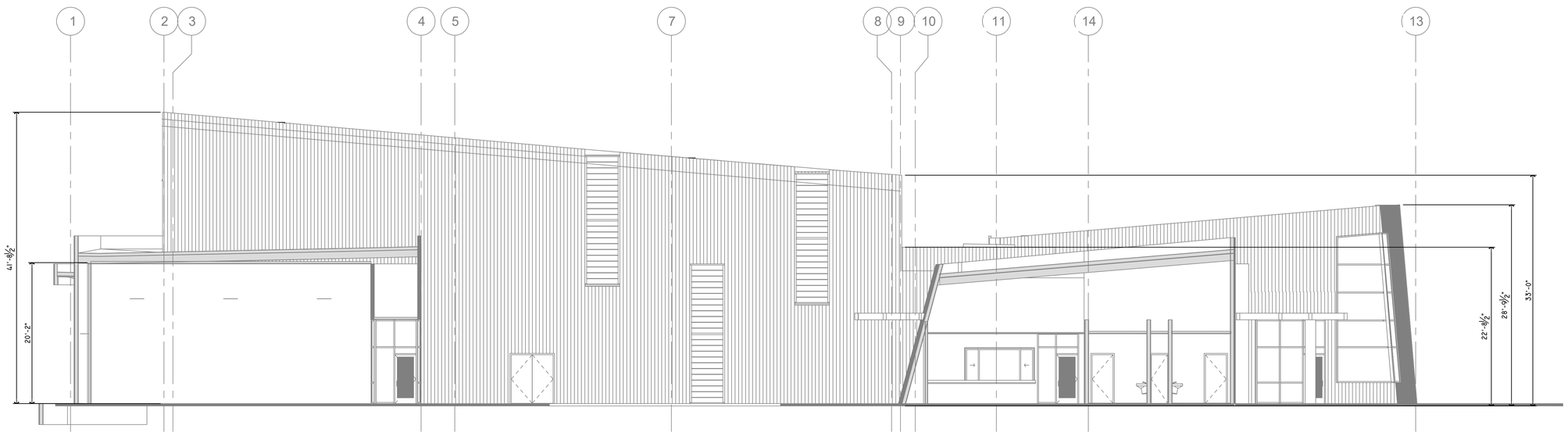

BUILDING SECTIONS 1

SCALE: 1/8" = 1'-0"

rrm design group

rrmdesign.com | (805) 543-1794

3765 SOUTH HIGUERA STREET, SUITE 102

SAN LUIS OBISPO, CA 93401

THE INCLUDED DRAWINGS, SPECIFICATIONS, IDEAS, DESIGNS AND ARRANGEMENTS REPRESENTED THEREBY ARE AND SHALL REMAIN THE PROPERTY OF RRM DESIGN GROUP AND NO PART THEREOF SHALL BE COPIED, DISCLOSED TO OTHERS OR USED IN CONNECTION WITH ANY WORK OR PROJECT OTHER THAN THE SPECIFIED PROJECT FOR WHICH THEY HAVE BEEN PREPARED AND DEVELOPED WITHOUT THE WRITTEN CONSENT OF RRM DESIGN GROUP. VISUAL CONTACT WITH THESE DRAWINGS OR SPECIFICATIONS SHALL CONSTITUTE CONCLUSIVE EVIDENCE OF ACCEPTANCE OF THESE RESTRICTIONS. THE RECEIPT OR POSSESSION OF THESE DRAWINGS OR SPECIFICATIONS SHALL NOT BE CONSIDERED AS A WAIVER OF RRM DESIGN GROUP'S RIGHTS.

RRM DESIGN GROUP COPYRIGHT 2023.
RRM IS A CALIFORNIA CORPORATION

CONSULTANT

COLLINGS & ASSOCIATES
FIRE PROTECTION ENGINEERING
260 MAPLE COURT, 241 VENTURA, CA 93003
PHONE: (805)658-0003 FAX: (805)658-0044
www.collingsandassociates.com

LICENSED PROFESSIONAL ENGINEER
DAVID EDELMAN
FP-1847
EXPIRES ON: 6/30/2024
FIRE PROTECTION
STATE OF CALIFORNIA

PORTERVILLE COMMUNITY CENTER AND PARK

HENDERSON AVE., PORTERVILLE, CA 93257

BUILDING SECTIONS

NO.	REVISION	DATE
△		
△		
△		
△		
△		
△		

Project Code/Flex

PROJECT MANAGER
A.Y.

DRAWN BY C&A

CHECKED BY T.D.

DATE
2024.05.17

PROJECT NUMBER
2883-01-RC22

SHEET
FP-3.1

Missing or invalid reference
File: .\Seismic\U.S.pdf
Sheet: 1

NOT TO SCALE

SPRINKLER CABINETS | 11

Victaulic

AUTOMATIC SPRINKLERS
FIRE PROTECTION PRODUCTS 40.81

Sprinkler Cabinets

PRODUCT DESCRIPTION

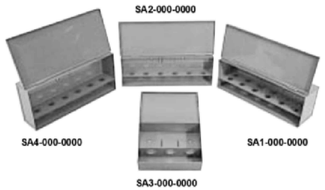

Victaulic Automatic Sprinkler Cabinets provide for storage of a supply of sprinklers. Maintaining a supply of spare sprinklers on the premises of automatic sprinkler systems will aid in the prompt replacement of operated or damaged sprinklers and returning a fire protection system to service as soon as possible.

This is a requirement of NFPA and most Authorities Having Jurisdiction. Refer to the applicable NFPA standard governing your specific installation for further details.

Six or twelve sprinkler capacity cabinets are available. This also provides for storage of the appropriate wrench which is required for the installation and removal of sprinklers.

NFPA 25 requires the total number of spare sprinklers to be stored on the premises of an automatic sprinkler system meet the minimum quantities shown in the accompanying table. When the sprinkler system includes more than one type of temperature rating sprinkler, the stock of spare sprinklers must include a proportional sampling of each type and temperature rating; however, a minimum of 3 each is recommended.

Sprinklers in Building	Min. Number of Spare Sprinklers
Under 300	6*
300 to 1000	12
Over 1000	24

*A minimum of three sprinklers of each type and temperature rating are required for residential fire sprinkler systems in one- and two-family dwellings and mobile homes.

TECHNICAL SPECIFICATIONS

Models:
- ❑ 12 sprinklers
- ❑ 6 sprinklers
- ❑ 3 sprinklers (NFPA/3D, Residential)
- ❑ 6 large sprinklers

Material: Heavy gauge steel, red enamel.

Cabinets are available in six or twelve sprinkler capacities with dimensions and shelf variations as shown on page 2. The cabinets are of welded construction fabricated from low carbon steel sheet. The box and shelves are fabricated from 0.030" thick material and the cover is fabricated from 0.042" thick material.

The cover is mounted to the box, at the top, with two 0.036" thick steel butt type hinges. A coat of red enamel paint is applied inside and out, and a label indicating that the cabinet is for spare sprinklers is bonded to the cover.

NOT TO SCALE

AUTOMATIC AIR VENT | 10

PURGEnVENT™

Model 7900AAV

WWW.PURGENVENT.COM

Automatic Air Venting Valve

The PURGEnVENT™ Model 7900AAV Automatic Air Venting Valve is designed to exceed NFPA 13 code that requires a single air vent be provided on each wet pipe sprinkler system utilizing metallic pipe.

To rapidly remove air from the system attach a hose to the purge valve's hose connection and open the valve while the system is being filled. Once the system is in operation the automatic vent will release any excess air. The purge valve is also convenient for cleaning the strainer.

AGF recommends installing the M7900AAV at high points near the end of system branch lines, whenever possible.

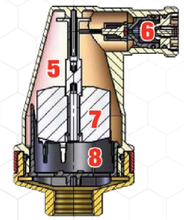

NFPA 13 (2016)

7.1.5 Air Venting
A single air vent with a connection conforming to 8.16.6 shall be provided on each wet pipe system utilizing metallic pipe.

8.16.6* Air Venting
The vent required by 7.1.5 shall be located near a high point in the system to allow air to be removed from that portion of the system by one of the following methods:
- Manual valve, minimum 1/2" (15mm) size
- Automatic air vent
- Other approved means

1. Patented, FM Approved, UL Listed M7900V Air Release Valve.
2. Forged brass body with 1" NPT isolation valve.
3. Stainless Steel 20 mesh strainer.
4. Adjustable purge valve with hose connection, thread cap, and lanyard.
5. Unique conical shape maximizes clearance to protect valve from contamination.
6. Recessed venting valve prevents damage to vent mechanism and float.
7. Single float on rigid shaft only allows vertical movement.
8. Bubble Breaker aids in the passage of air to the vent and acts as a secondary filter.

7910-2281 : 0600

Model 7900AAV Dimensions

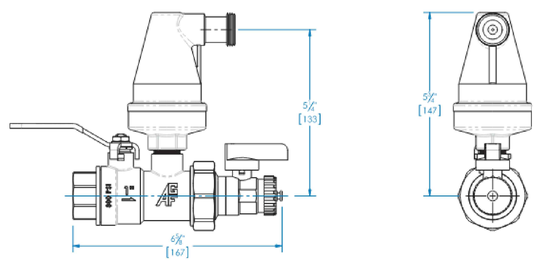

Model 7900AAV Installation Locations

AGF recommends installing the M7900AAV Automatic Air Venting Valve at high points near the end of system branch lines, whenever possible.

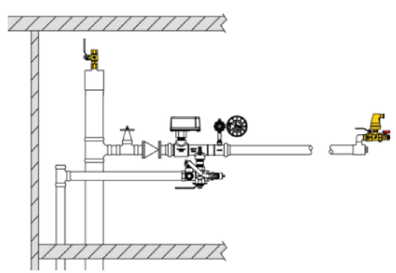

NOT TO SCALE

SPRINKLER CABINETS | 11 — AUTOMATIC AIR VENT | 10

NOT TO SCALE

9

NOT TO SCALE

8

BRANCH LINE RESTRAINTS (FT).

PIPE (INCH)	SEISMIC COEFFICIENT (CP)		
	CP ≤ 0.50	0.50 < CP ≤ 0.71	CP > 0.71
1			26
1¼			27
1½			29
2			31

NOTE:
1. RESTRAINT OF BRANCH LINES SHALL NOT APPLY TO PIPES INDIVIDUALLY SUPPORTED BY RODS LESS THAN 6 IN. LONG MEASURED BETWEEN THE TOP OF THE PIPE AND THE POINT OF ATTACHMENT TO THE BUILDING STRUCTURE. PER NFPA 13.
2. BRACING INTERVALS NOT TO EXCEED PER NFPA 13 AND IN BRACING CALCULATION.
3. END LINE BRACING SHALL BE LOCATED WITHIN 2'-0 OF A HANGER THAT RESTRAINT THE PIPE FROM UPWARD MOVEMENT.

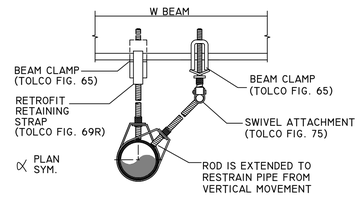

NOT TO SCALE

PIPE RESTRAINT | 6

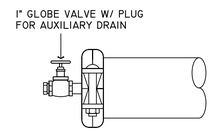

NOT TO SCALE

AUXILIARY DRAIN | 5

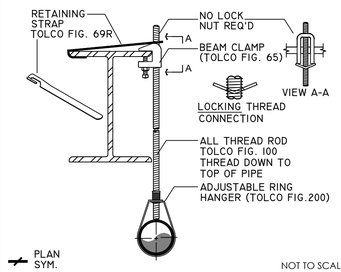

NOT TO SCALE

TOP BEAM CLAMP | 4

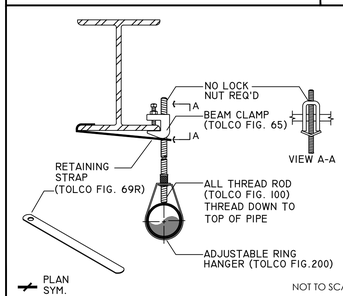

NOT TO SCALE

BOTTOM BEAM CLAMP | 3

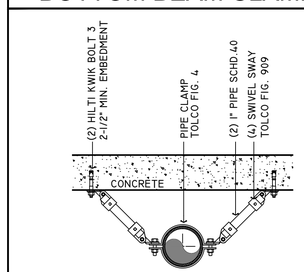

NOT TO SCALE

4-WAY SWAY BRACE | 2

NOT TO SCALE

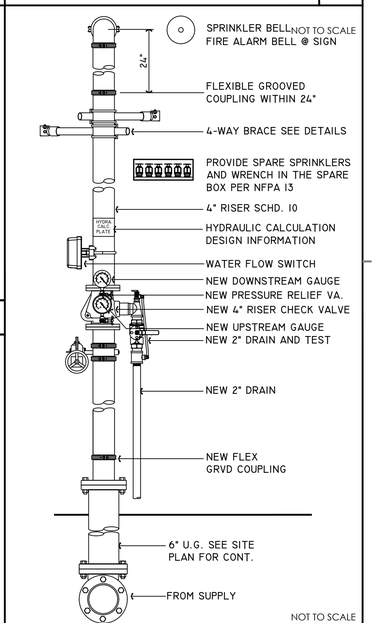

NOT TO SCALE

RISER DETAIL | 1

rrm design group
rrmdesign.com | (805) 543-1794
3765 SOUTH HIGUERA STREET, SUITE 102
SAN LUIS OBISPO, CA 93401

THE INCLUDED DRAWINGS, SPECIFICATIONS, IDEAS, DESIGNS AND ARRANGEMENTS REPRESENTED THEREBY ARE AND SHALL REMAIN THE PROPERTY OF RRM DESIGN GROUP. THEY ARE NOT TO BE USED IN WHOLE OR IN PART FOR ANY OTHER PROJECT OR USED IN CONNECTION WITH ANY WORK OR PROJECT OTHER THAN THE SPECIFIED PROJECT FOR WHICH THEY HAVE BEEN PREPARED AND DEVELOPED WITHOUT THE WRITTEN CONSENT OF RRM DESIGN GROUP. VISUAL CONTACT WITH THESE DRAWINGS OR SPECIFICATIONS SHALL CONSTITUTE CONCLUSIVE EVIDENCE OF ACCEPTANCE OF THESE RESTRICTIONS. THE SALE OF THESE DRAWINGS OR SPECIFICATIONS TO OTHERS SHALL NOT BE CONSIDERED A WAIVER OF RRM DESIGN GROUP'S RIGHTS.
RRM DESIGN GROUP COPYRIGHT 2023.
RRM IS A CALIFORNIA CORPORATION

CONSULTANT

COLLINGS & ASSOCIATES
FIRE PROTECTION ENGINEERING
260 MAPLE COURT, 241 VENTURA, CA 93003
PHONE: (805)658-0003 FAX: (805)658-0044
www.collingsandassociates.com

PROFESSIONAL ENGINEER — REGISTERED — FIRE PROTECTION — STATE OF CALIFORNIA
D. ED COLLINGS
C-10-1847
EXPIRES ON: 6/30/2024

PORTERVILLE COMMUNITY CENTER AND PARK
HENDERSON AVE., PORTERVILLE, CA 93257

DETAILS AND MANUFACTURER'S DATA SHEET

NO.	REVISION	DATE
△		
△		
△		
△		
△		
△		

Project Code/Flex

PROJECT MANAGER: A.Y.
DRAWN BY: C&A
CHECKED BY: T.D.
DATE: 2024.05.17
PROJECT NUMBER: 2883-01-RC22
SHEET: FP-4.0

1. FLOOR OR WALL ASSEMBLY - MIN 4-1/2 IN. (114 MM) THICK REINFORCED LIGHTWEIGHT OR NORMAL WEIGHT (100-150 PCF OR 1600-2400 KG/M3) CONCRETE. WALL MAY ALSO BE CONSTRUCTED OF ANY UL CLASSIFIED CONCRETE BLOCKS*. MAX DIAM OF OPENING IS 6 IN. (152 MM).
SEE CONCRETE BLOCKS (CAZT) CATEGORY IN THE FIRE RESISTANCE DIRECTORY FOR NAMES OF MANUFACTURERS.
2. METALLIC SLEEVE - (OPTIONAL) NOM 6 IN. (152 MM) DIAM (OR SMALLER) SCHEDULE 40 (OR HEAVIER) STEEL SLEEVE CAST OR GROUTED INTO FLOOR OR WALL ASSEMBLY, FLUSH WITH FLOOR OR WALL SURFACES.
3. THROUGH-PENETRANT - ONE METALLIC PIPE OR CONDUIT TO BE INSTALLED EITHER CONCENTRICALLY OR ECCENTRICALLY WITHIN THE FIRESTOP SYSTEM. THE ANNULAR SPACE BETWEEN PIPE, TUBE OR CONDUIT AND PERIPHERY OF OPENING SHALL BE MIN 0 IN. (0 MM) (POINT CONTACT) TO MAX 5-3/8 IN. (137 MM). PIPE OR CONDUIT TO BE RIGIDLY SUPPORTED ON BOTH SIDES OF FLOOR OR WALL ASSEMBLY. THE FOLLOWING TYPES AND SIZES OF METALLIC PIPES OR CONDUITS MAY BE USED:
   A. STEEL PIPE - NOM 4 IN. (102 MM) DIAM (OR SMALLER) SCHEDULE 10 (OR HEAVIER) STEEL PIPE.
   B. IRON PIPE - NOM 4 IN. (102 MM) DIAM (OR SMALLER) CAST OR DUCTILE IRON PIPE.
   C. COPPER PIPE - NOM 4 IN. (102 MM) DIAM (OR SMALLER) REGULAR (OR HEAVIER) COPPER PIPE.
   D. COPPER TUBING - NOM 4 IN. (102 MM) DIAM (OR SMALLER) TYPE L (OR HEAVIER) COPPER TUBING.
   E. CONDUIT - NOM 4 IN. (102 MM) DIAM (OR SMALLER) STEEL CONDUIT.
   F. CONDUIT - NOM 4 IN. (102 MM) DIAM (OR SMALLER) STEEL ELECTRICAL METALLIC TUBING (EMT).
4. FIRESTOP SYSTEM - THE FIRESTOP SYSTEM SHALL CONSIST OF THE FOLLOWING:
   A. PACKING MATERIAL - MIN 4 IN. (102 MM) THICKNESS OF MIN 4 PCF (64 KG/M3) MINERAL WOOL BATT INSULATION FIRMLY PACKED INTO OPENING AS A PERMANENT FORM. PACKING MATERIAL TO BE RECESSED FROM TOP SURFACE OF FLOOR OR FROM BOTH SURFACES OF WALL AS REQUIRED TO ACCOMMODATE THE REQUIRED THICKNESS OF FILL MATERIAL.
   B. FILL, VOID OR CAVITY MATERIAL* - SEALANT - MIN 1/4 IN. (6 MM) THICKNESS OF FILL MATERIAL APPLIED WITHIN THE ANNULUS, FLUSH WITH TOP SURFACE OF FLOOR OR WITH BOTH SURFACES OF WALL. FOR 3 HR RATED ASSEMBLIES, A MIN 1/4 IN. (6 MM) DIAM BEAD OF FILL MATERIAL SHALL BE APPLIED AT THE CONCRETE/PIPE INTERFACE AT THE POINT CONTACT LOCATION ON THE TOP SURFACE OF FLOOR AND ON BOTH SURFACES OF WALL. HILTI CONSTRUCTION CHEMICALS, DIV OF HILTI INC - FS-ONE SEALANT OR CP604 SELF-LEVELING FIRESTOP SEALANT. CP604 SHALL BE USED IN FLOOR APPLICATIONS ONLY. WHEN CP604 IS USED, F RATING IS 2 HR.

*BEARING THE UL CLASSIFICATION MARK

System No. C-AJ-1421
F Rating - 2 and 3 Hr (See Item 4B)
T Rating = 0 Hr

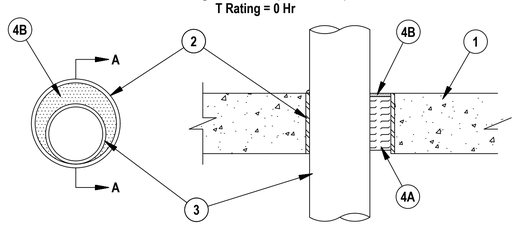

SECTION A-A

Hilti Firestop Systems

Reproduced by HILTI, Inc. Courtesy of Underwriters Laboratories, Inc. April 26, 2004

CLASSIFIED UL C US

1. FLOOR OR WALL ASSEMBLY -- THE FIRE-RATED GYPSUM WALLBOARD/STUD WALL ASSEMBLY SHALL BE CONSTRUCTED OF THE MATERIALS AND IN THE MANNER SPECIFIED IN THE INDIVIDUAL U300 OR U400 SERIES WALL AND PARTITION DESIGNS IN THE UL FIRE RESISTANCE DIRECTORY AND SHALL INCLUDE THE FOLLOWING CONSTRUCTION FEATURES:
   A. STUDS -- WALL FRAMING MAY CONSIST OF EITHER WOOD STUDS OR STEEL CHANNEL STUDS. WOOD STUDS TO CONSIST OF NOM 2 BY 4 IN. LUMBER SPACED 16 IN. OC. STEEL STUDS TO BE MIN 2-1/2 IN. WIDE AND SPACED MAX 24 IN. OC.
   B. GYPSUM BOARD* -- NOM 5/8 IN. THICK GYPSUM WALLBOARD, AS SPECIFIED IN THE INDIVIDUAL WALL AND PARTITION DESIGN. MAX DIAM OF OPENING IS 4 IN.
2. METALLIC SLEEVE -- (OPTIONAL) -- NOM 4 IN. DIAM (OR SMALLER) SCHEDULE 40 (OR THINNER) STEEL PIPE CAST INTO WALL ASSEMBLY WITH JOINT COMPOUND AND INSTALLED FLUSH WITH WALL SURFACES.
3. ELECTRICAL NONMETALLIC TUBING+ -- NOM 2 IN. DIAM (OR SMALLER) CORRUGATED WALL ELECTRICAL NONMETALLIC TUBING (ENT) CONSTRUCTED OF POLYVINYL CHLORIDE (PVC). TUBING TO BE RIGIDLY SUPPORTED ON BOTH SIDES OF WALL ASSEMBLY. A NOM ANNULAR SPACE OF 3/4 IN. IS REQUIRED WITHIN THE FIRESTOP SYSTEM.
SEE ELECTRICAL NONMETALLIC TUBING (FKHU) CATEGORY IN THE ELECTRICAL CONSTRUCTION MATERIALS DIRECTORY FOR NAMES OF MANUFACTURERS.
4. FILL, VOID OR CAVITY MATERIAL* -- SEALANT -- INSTALLED SYMMETRICALLY ON BOTH SIDES OF THE WALL. THE HOURLY F RATING OF THE FIRESTOP SYSTEM IS EQUAL TO THE HOURLY FIRE RATING OF THE WALL ASSEMBLY IN WHICH IT IS INSTALLED. FILL MATERIAL APPLIED WITHIN THE ANNULUS, FLUSH WITH EACH END OF THE STEEL SLEEVE AT THE THICKNESS SHOWN IN THE TABLE BELOW:

F Rating Hr	T Rating Hr	Fill Mtl Depth In.
1	0	5/8

HILTI CONSTRUCTION CHEMICALS, DIV OF HILTI INC -- FS-One Sealant
+Bearing the UL Listing Mark
*Bearing the UL Classification Marking

System No. W-L-2075
F Ratings - 1 & 2 Hr (See Item 4)
T Ratings - 0 and 2 Hr (see Item 4)
L Rating At Ambient - Less Than 1 CFM/Sq Ft
L Rating At 400 F - 4 CFM/Sq Ft

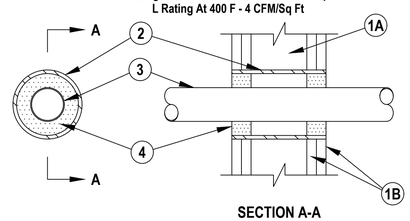

SECTION A-A

Hilti Firestop Systems

Reproduced by HILTI, Inc. Courtesy of Underwriters Laboratories, Inc. January 9, 2003

NOT TO SCALE

FIRE STOP SYSTEM | 3

Victaulic® VicFlex™ Series FL-SC/VS2
Standard Coverage, Quick/Standard Response Sprinklers
K5.6 (80)

Victaulic 10.93

Patent Pending

1.0 PRODUCT DESCRIPTION

The Series FL-SC/VS2 is a listed sprinkler and hose assembly that has been calibrated as a K5.6. This product does not require further calculation or use of equivalent length values.

STANDARD RESPONSE RECESSED PENDENT SPRINKLER	
SIN	V3201
ORIENTATION	PENDENT
NOMINAL K-FACTOR/METRIC K-FACTOR	5.6/80
RESPONSE	Standard
CONNECTION	1" NPT/25mm BSPT/1" IGS
MAX. WORKING PRESSURE	175 psi (1200 kPa)
ESCUTCHEON	Recessed
LENGTHS	56"/1422mm and 68"/1727mm

QUICK RESPONSE RECESSED PENDENT SPRINKLER	
SIN	V3202
ORIENTATION	PENDENT
NOMINAL K-FACTOR/METRIC K-FACTOR	5.6/80
RESPONSE	Quick
CONNECTION	1" NPT/25mm BSPT/1" IGS
MAX. WORKING PRESSURE	175 psi (1200 kPa)
ESCUTCHEON	Recessed
LENGTHS	56"/1422mm and 68"/1727mm

STANDARD RESPONSE CONCEALED PENDENT SPRINKLER	
SIN	V3203
ORIENTATION	CONCEALED PENDENT
NOMINAL K-FACTOR/METRIC K-FACTOR	5.6/80
RESPONSE	Standard
CONNECTION	1" NPT/25mm BSPT/1" IGS
MAX. WORKING PRESSURE	175 psi (1200 kPa)
ESCUTCHEON	Concealed
LENGTHS	56"/1422mm and 68"/1727mm

QUICK RESPONSE CONCEALED PENDENT SPRINKLER	
SIN	V3204
ORIENTATION	CONCEALED PENDENT
NOMINAL K-FACTOR/METRIC K-FACTOR	5.6/80
RESPONSE	Quick
CONNECTION	1" NPT/25mm BSPT/1" IGS
MAX. WORKING PRESSURE	175 psi (1200 kPa)
ESCUTCHEON	Concealed
LENGTHS	56"/1422mm and 68"/1727mm

AVAILABLE WRENCHES	
SPRINKLER	V32 Socket
Pendent	■

Factory Hydrostatic Test: 100% @ 500 psi/3447 kPa/34 bar

Min. Operating Pressure: 7 psi/48 kPa/.5 bar

Temperature Rating: See tables in section 2.0

ALWAYS REFER TO ANY NOTIFICATIONS AT THE END OF THIS DOCUMENT REGARDING PRODUCT INSTALLATION, MAINTENANCE OR SUPPORT.

victaulic.com

10.93 18135 Rev B Updated 07/2023 © 2023 Victaulic Company. All rights reserved.

victaulic.com

2.0 CERTIFICATION/LISTINGS

c UL us LISTED

APPROVALS/LISTINGS				
SIN	V3201	V3202	V3203	V3204[1]
Nominal K Factor Imperial	5.6	5.6	5.6	5.6
Metric K-Factor (lpm/(bar[1/2]))	80	80	80	80
Orientation	Pendent	Pendent	Pendent	Pendent
Escutcheon	Recessed	Recessed	Concealed	Concealed
	Approved Temperature Ratings F°/C°			
cULus	155°F/68°C 200°F/93°C	155°F/68°C 200°F/93°C	155°F/68°C 200°F/93°C	155°F/68°C 200°F/93°C

[1] The V3204 is UL-Listed as a standard response sprinkler when installed with a gasketed coverplate. Coverplate gaskets are optional and ordered separately.

NOTES
- Listings and approval as of printing.
- For system design purposes, no equivalent length calculations are required.
- These sprinklers are required to be vented. Installations with a positive pressure air plenum above the housing are not permitted.

MAXIMUM ALLOWABLE NUMBER OF BENDS	
Nominal Sprinkler Length inches mm	Maximum Allowable Number of 90° Bends at 2"/51mm Bend Radius for UL Listing
56.0 1422	4
68.0 1727	4

Agency	Approved/Listed Bracket Styles
UL	AB2, AB4, AB5, AB10

NOT TO SCALE

FLEXIBLE DROP | 2

Victaulic® FireLock™ Series FL-QR
Standard Coverage, Quick Response
Upright, Pendent and Recessed Pendent Sprinklers
K2.8 (4.0), K4.2 (6.1), K5.6 (8.1), K8.0 (11.5)

Victaulic 41.01

1.0 PRODUCT DESCRIPTION

QUICK RESPONSE UPRIGHT SPRINKLERS				
SIN	V2815	V4215	V2704	V3402
ORIENTATION	UPRIGHT	UPRIGHT	UPRIGHT	UPRIGHT
K-FACTOR[1]	2.8 Imp./4.0 S.I.	4.2 Imp./6.1 S.I.	5.6 Imp./8.1 S.I.	8.0 Imp./11.5 S.I.
CONNECTION	½" NPT/15mm BSPT	½" NPT/15mm BSPT	½" NPT/15mm BSPT/IGS	¾" NPT/20mm BSPT/IGS
MAX. WORKING PRESSURE	175 psi/1200 kPa	175 psi/1200 kPa	175 psi/1200 kPa cULus 250 psi /1725 kPa	175 psi/1200 kPa
GLOBE RE-DESIGNATION	GL2815	GL4215	–	–
GLOBE EQUIVALENT	–	–	GL5615	GL8118

QUICK RESPONSE PENDENT SPRINKLERS				
SIN	V2801	V4201	V2708	V3406
ORIENTATION	PENDENT	PENDENT	PENDENT	PENDENT
K-FACTOR[1]	2.8 Imp./4.0 S.I.	4.2 Imp./6.1 S.I.	5.6 Imp./8.1 S.I.	8.0 Imp./11.5 S.I.
CONNECTION	½" NPT/15mm BSPT	½" NPT/15mm BSPT	½" NPT/15mm BSPT/IGS	¾" NPT/20mm BSPT/IGS
MAX. WORKING PRESSURE	175 psi /1200 kPa	175 psi /1200 kPa	175 psi /1200 kPa cULus 250 psi/1725 kPa	175 psi /1200 kPa
GLOBE RE-DESIGNATION	GL2801	GL4201	–	–
GLOBE EQUIVALENT	–	–	GL5601	GL8101

QUICK RESPONSE RECESSED PENDENT SPRINKLERS				
SIN	V2801	V4201	V2708	V3406
ORIENTATION	PENDENT	PENDENT	PENDENT	PENDENT
K-FACTOR[1]	2.8 Imp./4.0 S.I.	4.2 Imp./6.1 S.I.	5.6 Imp./8.1 S.I.	8.0 Imp./11.5 S.I.
CONNECTION	½" NPT/15mm BSPT	½" NPT/15mm BSPT	½" NPT/15mm BSPT/IGS	¾" NPT/20mm BSPT/IGS
MAX. WORKING PRESSURE	175 psi/1200 kPa	175 psi/1200 kPa	175 psi/1200 kPa cULus 250 psi/1725 kPa	175 psi/1200 kPa
ESCUTCHEON	Recessed	Recessed	Recessed	Recessed
GLOBE RE-DESIGNATION	GL2801	GL4201	–	–
GLOBE EQUIVALENT	–	–	GL5601	GL8101

AVAILABLE GUARDS/SHIELDS				
SPRINKLER	V28	V42	V27	V34
Upright			■	■
Pendent			■	■

victaulic.com

2.0 CERTIFICATION/LISTINGS

UPRIGHT APPROVALS/LISTINGS				
SIN	V2815	V4215	V2704	V3402
Nominal K Factor Imperial	2.8	4.2	5.6	8.0
Nominal K Factor S.I.[2]	4.0	6.1	8.1	11.5
Orientation	UPRIGHT	UPRIGHT	UPRIGHT	UPRIGHT
	Approved Temperature Ratings F°/C°			
cULus	135°F/57°C 155°F/68°C 175°F/79°C 200°F/93°C 286°F/141°C	135°F/57°C 155°F/68°C 175°F/79°C 200°F/93°C 286°F/141°C	135°F/57°C 155°F/68°C 175°F/79°C 200°F/93°C 286°F/141°C	135°F/57°C 155°F/68°C 175°F/79°C 200°F/93°C 286°F/141°C
FM	–	–	135°F/57°C 155°F/68°C 175°F/79°C 200°F/93°C 286°F/141°C	135°F/57°C 155°F/68°C 175°F/79°C 200°F/93°C 286°F/141°C
LPCB	–	–	135°F/57°C 155°F/68°C 175°F/79°C 200°F/93°C 286°F/141°C	135°F/57°C 155°F/68°C 175°F/79°C 200°F/93°C 286°F/141°C
CE	–	–	135°F/57°C 155°F/68°C 175°F/79°C 200°F/93°C 286°F/141°C	135°F/57°C 155°F/68°C 175°F/79°C 200°F/93°C 286°F/141°C
VdS	–	–	135°F/57°C 155°F/68°C 175°F/79°C 200°F/93°C 286°F/141°C	135°F/57°C 155°F/68°C 175°F/79°C 200°F/93°C 286°F/141°C
CCC K-ZSTZ	–	–	155°F/68°C 175°F/79°C 286°F/141°C	155°F/68°C 286°F/141°C

[2] For K-Factor when pressure is measured in Bar, multiply S.I. units by 10.

PENDENT APPROVALS/LISTINGS				
SIN	V2801	V4201	V2708	V3406
Nominal K Factor Imperial	2.8	4.2	5.6	8.0
Nominal K Factor S.I.[2]	4.0	6.1	8.1	11.5
Orientation	PENDENT	PENDENT	PENDENT	PENDENT
Escutcheon	Flush/Extended	Flush/Extended	Flush/Extended	Flush/Extended
	Approved Temperature Ratings F°/C°			
cULus	135°F/57°C 155°F/68°C 175°F/79°C 200°F/93°C 286°F/141°C	135°F/57°C 155°F/68°C 175°F/79°C 200°F/93°C 286°F/141°C	135°F/57°C 155°F/68°C 175°F/79°C 200°F/93°C 286°F/141°C	135°F/57°C 155°F/68°C 175°F/79°C 200°F/93°C 286°F/141°C
FM	–	–	135°F/57°C 155°F/68°C 175°F/79°C 200°F/93°C 286°F/141°C	135°F/57°C 155°F/68°C 175°F/79°C 200°F/93°C 286°F/141°C
CCC K-ZSTX	–	–	155°F/68°C 200°F/93°C 286°F/141°C	155°F/68°C 286°F/141°C

1

rrm design group
rrmdesign.com | (805) 543-1794
3765 SOUTH HIGUERA STREET, SUITE 102
SAN LUIS OBISPO, CA 93401

THE INCLUDED DRAWINGS, SPECIFICATIONS, IDEAS, DESIGNS AND ARRANGEMENTS REPRESENTED THEREBY ARE AND SHALL REMAIN THE PROPERTY OF RRM DESIGN GROUP. NO PART THEREOF SHALL BE COPIED, DISCLOSED TO OTHERS OR BE USED IN CONNECTION WITH ANY WORK OR PROJECT OTHER THAN THE SPECIFIED PROJECT FOR WHICH THEY HAVE BEEN PREPARED AND DEVELOPED WITHOUT THE WRITTEN CONSENT OF RRM DESIGN GROUP. SUBMITTAL OF THESE DOCUMENTS OR SPECIFICATIONS SHALL CONSTITUTE CONCLUSIVE EVIDENCE OF ACCEPTANCE OF THESE RESTRICTIONS. SUBMITTAL OF THESE DOCUMENTS FOR PUBLIC AGENCY REVIEW SHALL NOT BE CONSIDERED A WAIVER OF RRM DESIGN GROUP'S RIGHTS.
RRM DESIGN GROUP COPYRIGHT 2023.
RRM IS A CALIFORNIA CORPORATION

CONSULTANT

COLLINGS & ASSOCIATES
FIRE PROTECTION ENGINEERING
260 MAPLE COURT, 241 VENTURA, CA 93003
PHONE: (805)658-0003 FAX: (805)658-0044
www.collingsandassociates.com

REGISTERED PROFESSIONAL ENGINEER
DAVID EDELMAN
FP-1847
EXPIRES ON: 6/30/2024
FIRE PROTECTION
STATE OF CALIFORNIA

PORTERVILLE COMMUNITY CENTER AND PARK
HENDERSON AVE., PORTERVILLE, CA 93257
MANUFACTURER'S DATA SHEET

NO.	REVISION	DATE
△		
△		
△		
△		
△		
△		

Project Code/Flex

PROJECT MANAGER: A.Y.
DRAWN BY: C&A
CHECKED BY: T.D.
DATE: 2024.05.17
PROJECT NUMBER: 2883-01-RC22
SHEET: FP-5.0

TOLBrace™ Seismic Bracing Calculations
V8.8.124

Project Address: Porterville Community Center, Henderson Avenue, Porterville , California 93257

Job #

Contractor:
Address: 6450 Chesebro Road, Agoura Hills, California, 9130
Phone:
Licence:

Calculations based on 2019 NFPA Pamphlet #13

Brace Information

Maximum Brace Length	7' 0" (2.134 m)
Diameter of Brace	1"
Type of Brace	Sch.40
Angle of Brace	30° Min.
Least Rad. of Gyration	0.42" (11 mm)
L/R Value	200
Max Horizontal Load	926 lbs (420 kg)

TOLCO™ Brace Components

TOLCO™ Component	Listed Load	Adjusted Load
Fig. 4L Clamp	2000 lbs (907 kg)	1000 lbs (454 kg)
Fig.980 - 3/8" Universal Swive	1600 lbs (726 kg)	800 lbs (363 kg)
Fig.825 Across	1600 lbs (726 kg)	800 lbs (362 kg)

*Calculation Based on CONCENTRIC Loading
*Please Note: These calculations are for TOLCO™ components only. Use of any other components voids these calculations and the listing of the assembly.

Seismic Brace Assembly Detail

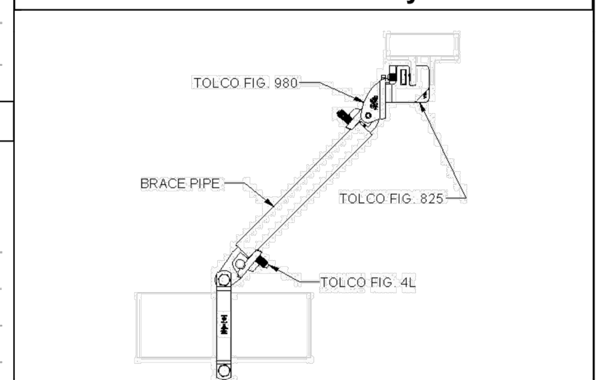

Brace Identification on Plans SB4
Brace Type Lateral [ ] Longitudinal [X] 4-Way [ ]

Fastener Information

Orientation to Connecting Surface	NFPA Type A
Fastener	
Type	Fig.825 Across
Diameter	N/A
Length	N/A
Maximum Load	1600 lbs (726 kg)
Prying Factor	N/A

Sprinkler System Load Calculation (Fpw = CpWp)
Cp = 0.42

Diameter	Type	Length	Total Length	Weight Per Unit Length	Total Weight
2.5" (65 mm)	Sch. 10	20 ft (6.1 m)	20 ft (6.1 m)	5.89 lb/ft (8.77 kg/m)	118 lbs (54 kg)

Subtotal Weight	118 lbs (54 kg)
Wp (incl. 15%)	136 lbs (62 kg)
Total (Fpw)	57 lbs (26 kg)
Maximum Fpw per 18.5.5.2 (if applicable)	N/A

Main Size 2.5" — Type/Sch. Sch. 10 — Spacing (ft) 20

{TOLBrace™ Version 8} Use of TOLBrace™ is subject to terms and conditions per the end user license agreement

TOLBrace™ Seismic Calculations

Porterville Community Center Job #
Henderson Avenue

Brace Identification	SB4
Brace Type (Per NFPA#13)	NFPA Type A
Braced Pipe (ft)	2.5" Sch.10 Steel Pipe
Spacing of Brace	20' 0" (6.1 m)
Orientation of Brace	Longitudinal
Bracing Material	1" Sch.40
Maximum Brace Length	7' 0" (2.13 m)
Slenderness Ratio used for Load Calculation	200
True Angle of Brace for Calculation	30°
Type of Fastener	Fig.825 Across Beam
Length of Fastener	N/A

Summary of Pipe within Zone of Influence

2.5" Sch.10 Steel Pipe (63.5 mm)	20 ft (6.1 m)

G-Factor Used 0.42
Allowance for Heads and Fittings 15%

Conclusions

Total Adjusted Load of Pipe in Zone of Influence	57 lbs (26 kg)
Material Capacity	926 lbs (420 kg)
Fastener Capacity	800 lbs (363 kg)
Fig. 4L Clamp	1000 lbs (454 kg)
Fig.980 - 3/8" Universal Swivel	800 lbs (363 kg)
Structural Member	W-BEAM

Calculations prepared by Collings & Associate:

* The description of the Structural Member is for informational purposes only.
TOLBrace™ software calculates the brace assembly only, not the structure it is attached to.
Calculated with TOLBrace™ 8
Visit us at www.tolco.com

SB4 LONGITUDINAL BRACE | 4

TOLBrace™ Seismic Bracing Calculations
V8.8.124

Project Address: Porterville Community Center, Henderson Avenue, Porterville , California 93257

Job #

Contractor:
Address: 6450 Chesebro Road, Agoura Hills, California, 9130
Phone:
Licence:

Calculations based on 2019 NFPA Pamphlet #13

Brace Information

Maximum Brace Length	7' 0" (2.134 m)
Diameter of Brace	1"
Type of Brace	Sch.40
Angle of Brace	30° Min.
Least Rad. of Gyration	0.42" (11 mm)
L/R Value	200
Max Horizontal Load	926 lbs (420 kg)

TOLCO™ Brace Components

TOLCO™ Component	Listed Load	Adjusted Load
Fig. 1001 Clamp	2000 lbs (907 kg)	1000 lbs (454 kg)
Fig.980 - 3/8" Universal Swive	1600 lbs (726 kg)	800 lbs (363 kg)
Fig.825 Along	1600 lbs (726 kg)	800 lbs (362 kg)

*Calculation Based on CONCENTRIC Loading
*Please Note: These calculations are for TOLCO™ components only. Use of any other components voids these calculations and the listing of the assembly.

Seismic Brace Assembly Detail

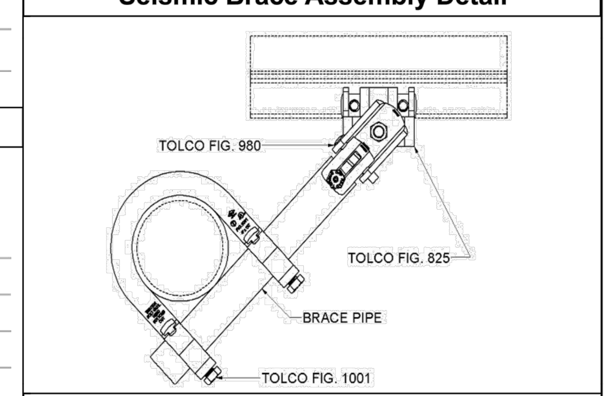

Brace Identification on Plans SB3
Brace Type Lateral [X] Longitudinal [ ] 4-Way [ ]

Fastener Information

Orientation to Connecting Surface	NFPA Type A
Fastener	
Type	Fig.825 Along
Diameter	N/A
Length	N/A
Maximum Load	1600 lbs (726 kg)
Prying Factor	N/A

Sprinkler System Load Calculation (Fpw = CpWp)
Cp = 0.42

Diameter	Type	Length	Total Length	Weight Per Unit Length	Total Weight
2.5" (65 mm)	Sch. 10	20 ft (6.1 m)	20 ft (6.1 m)	5.89 lb/ft (8.77 kg/m)	118 lbs (54 kg)
1.25" (32 mm)	Sch. 40	12 ft (3.7 m)	12 ft (3.7 m)	2.93 lb/ft (4.36 kg/m)	35 lbs (16 kg)
1" (25 mm)	Sch. 40	33 ft (10.1 m)	33 ft (10.1 m)	2.05 lb/ft (3.05 kg/m)	68 lbs (31 kg)

Subtotal Weight	221 lbs (100 kg)
Wp (incl. 15%)	254 lbs (115 kg)
Total (Fpw)	107 lbs (48 kg)
Maximum Fpw per 18.5.5.2 (if applicable)	641 lb (290 kg)

Main Size 2.5" — Type/Sch. Sch. 10 — Spacing (ft) 20

{TOLBrace™ Version 8} Use of TOLBrace™ is subject to terms and conditions per the end user license agreement

TOLBrace™ Seismic Calculations

Porterville Community Center Job #
Henderson Avenue

Brace Identification	SB3
Brace Type (Per NFPA#13)	NFPA Type A
Braced Pipe (ft)	2.5" Sch.10 Steel Pipe
Spacing of Brace	20' 0" (6.1 m)
Orientation of Brace	Lateral
Bracing Material	1" Sch.40
Maximum Brace Length	7' 0" (2.13 m)
Slenderness Ratio used for Load Calculation	200
True Angle of Brace for Calculation	30°
Type of Fastener	Fig.825 Along Beam
Length of Fastener	N/A

Summary of Pipe within Zone of Influence

2.5" Sch.10 Steel Pipe (63.5 mm)	20 ft (6.1 m)
1.25" Sch.40 Steel Pipe (31.75 mm)	12 ft (3.7 m)
1" Sch.40 Steel Pipe (25.4 mm)	33 ft (10.1 m)

G-Factor Used 0.42
Allowance for Heads and Fittings 15%

Conclusions

Total Adjusted Load of Pipe in Zone of Influence	107 lbs (49 kg)
Material Capacity	926 lbs (420 kg)
Fastener Capacity	800 lbs (363 kg)
Fig. 1001 Clamp	1000 lbs (454 kg)
Fig.980 - 3/8" Universal Swivel	800 lbs (363 kg)
Structural Member	WBEAM

Calculations prepared by Collings & Associate:

* The description of the Structural Member is for informational purposes only.
TOLBrace™ software calculates the brace assembly only, not the structure it is attached to.
Calculated with TOLBrace™ 8
Visit us at www.tolco.com

SB3 LATERAL BRACE | 3

TOLBrace™ Seismic Bracing Calculations
V8.8.124

Project Address: Porterville Community Center, Henderson Avenue, Porterville , California 93257

Job #

Contractor:
Address: 6450 Chesebro Road, Agoura Hills, California, 9130
Phone:
Licence:

Calculations based on 2019 NFPA Pamphlet #13

Brace Information

Maximum Brace Length	7' 0" (2.134 m)
Diameter of Brace	1"
Type of Brace	Sch.40
Angle of Brace	30° Min.
Least Rad. of Gyration	0.42" (11 mm)
L/R Value	200
Max Horizontal Load	926 lbs (420 kg)

TOLCO™ Brace Components

TOLCO™ Component	Listed Load	Adjusted Load
Fig. 4L Clamp	2000 lbs (907 kg)	1000 lbs (454 kg)
Fig.980 - 3/8" Universal Swive	1600 lbs (726 kg)	800 lbs (363 kg)
Fig.825 Along	1600 lbs (726 kg)	800 lbs (362 kg)

*Calculation Based on CONCENTRIC Loading
*Please Note: These calculations are for TOLCO™ components only. Use of any other components voids these calculations and the listing of the assembly.

Seismic Brace Assembly Detail

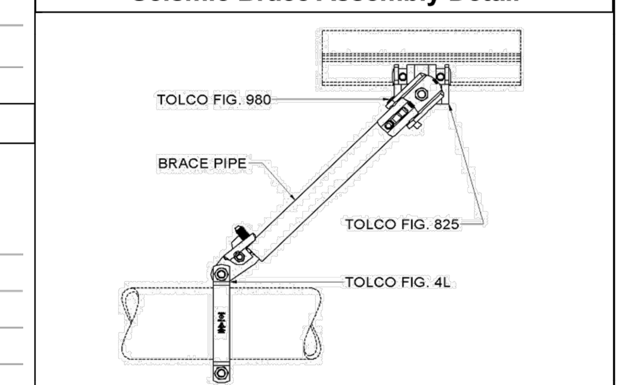

Brace Identification on Plans SB2
Brace Type Lateral [ ] Longitudinal [X] 4-Way [ ]

Fastener Information

Orientation to Connecting Surface	NFPA Type A
Fastener	
Type	Fig.825 Along
Diameter	N/A
Length	N/A
Maximum Load	1600 lbs (726 kg)
Prying Factor	N/A

Sprinkler System Load Calculation (Fpw = CpWp)
Cp = 0.42

Diameter	Type	Length	Total Length	Weight Per Unit Length	Total Weight
4" (100 mm)	Sch. 40	40 ft (12.2 m)	40 ft (12.2 m)	16.4 lb/ft (24.41 kg/m)	656 lbs (298 kg)

Subtotal Weight	656 lbs (298 kg)
Wp (incl. 15%)	754 lbs (342 kg)
Total (Fpw)	317 lbs (144 kg)
Maximum Fpw per 18.5.5.2 (if applicable)	N/A

Main Size 4" — Type/Sch. Sch. 40 — Spacing (ft) 40

{TOLBrace™ Version 8} Use of TOLBrace™ is subject to terms and conditions per the end user license agreement

TOLBrace™ Seismic Calculations

Porterville Community Center Job #
Henderson Avenue

Brace Identification	SB2
Brace Type (Per NFPA#13)	NFPA Type A
Braced Pipe (ft)	4" Sch.40 Steel Pipe
Spacing of Brace	40' 0" (12.19 m)
Orientation of Brace	Longitudinal
Bracing Material	1" Sch.40
Maximum Brace Length	7' 0" (2.13 m)
Slenderness Ratio used for Load Calculation	200
True Angle of Brace for Calculation	30°
Type of Fastener	Fig.825 Along Beam
Length of Fastener	N/A

Summary of Pipe within Zone of Influence

4" Sch.40 Steel Pipe (101.6 mm)	40 ft (12.2 m)

G-Factor Used 0.42
Allowance for Heads and Fittings 15%

Conclusions

Total Adjusted Load of Pipe in Zone of Influence	317 lbs (144 kg)
Material Capacity	926 lbs (420 kg)
Fastener Capacity	800 lbs (363 kg)
Fig. 4L Clamp	1000 lbs (454 kg)
Fig.980 - 3/8" Universal Swivel	800 lbs (363 kg)
Structural Member	WBEAM

Calculations prepared by Collings & Associate:

* The description of the Structural Member is for informational purposes only.
TOLBrace™ software calculates the brace assembly only, not the structure it is attached to.
Calculated with TOLBrace™ 8
Visit us at www.tolco.com

SB2 LONGITUDINAL BRACE | 2

TOLBrace™ Seismic Bracing Calculations
V8.8.124

Project Address: Porterville Community Center, Henderson Avenue, Porterville , California 93257

Job #

Contractor:
Address: 6450 Chesebro Road, Agoura Hills, California, 9130
Phone:
Licence:

Calculations based on 2019 NFPA Pamphlet #13

Brace Information

Maximum Brace Length	7' 0" (2.134 m)
Diameter of Brace	1"
Type of Brace	Sch.40
Angle of Brace	75° Min.
Least Rad. of Gyration	0.42" (11 mm)
L/R Value	200
Max Horizontal Load	1604 lbs (728 kg)

TOLCO™ Brace Components

TOLCO™ Component	Listed Load	Adjusted Load
Fig. 1001 Clamp	2000 lbs (907 kg)	1732 lbs (785 kg)
Fig.980 - 3/8" Universal Swive	1600 lbs (726 kg)	1385 lbs (628 kg)
Fig.825 Across	1600 lbs (726 kg)	1385 lbs (628 kg)

*Calculation Based on CONCENTRIC Loading
*Please Note: These calculations are for TOLCO™ components only. Use of any other components voids these calculations and the listing of the assembly.

Seismic Brace Assembly Detail

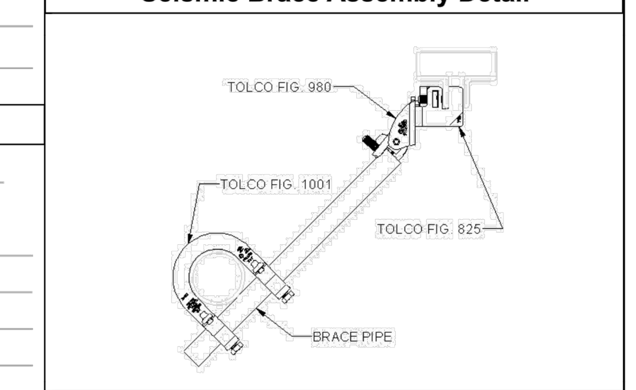

Brace Identification on Plans SB1
Brace Type Lateral [X] Longitudinal [ ] 4-Way [ ]

Fastener Information

Orientation to Connecting Surface	NFPA Type C
Fastener	
Type	Fig.825 Across
Diameter	N/A
Length	N/A
Maximum Load	1600 lbs (726 kg)
Prying Factor	N/A

Sprinkler System Load Calculation (Fpw = CpWp)
Cp = 0.42

Diameter	Type	Length	Total Length	Weight Per Unit Length	Total Weight
4" (100 mm)	Sch. 10	20 ft (6.1 m)	20 ft (6.1 m)	11.78 lb/ft (17.53 kg/m)	236 lbs (107 kg)
2" (50 mm)	Sch. 40	80 ft (24.4 m)	80 ft (24.4 m)	5.13 lb/ft (7.63 kg/m)	410 lbs (186 kg)

Subtotal Weight	646 lbs (293 kg)
Wp (incl. 15%)	743 lbs (337 kg)
Total (Fpw)	312 lbs (142 kg)
Maximum Fpw per 18.5.5.2 (if applicable)	1635 lb (741 kg)

Main Size 4" — Type/Sch. Sch. 10 — Spacing (ft) 20

{TOLBrace™ Version 8} Use of TOLBrace™ is subject to terms and conditions per the end user license agreement

TOLBrace™ Seismic Calculations

Porterville Community Center Job #
Henderson Avenue

Brace Identification	SB1
Brace Type (Per NFPA#13)	NFPA Type C
Braced Pipe (ft)	4" Sch.10 Steel Pipe
Spacing of Brace	20' 0" (6.1 m)
Orientation of Brace	Lateral
Bracing Material	1" Sch.40
Maximum Brace Length	7' 0" (2.13 m)
Slenderness Ratio used for Load Calculation	200
True Angle of Brace for Calculation	75°
Type of Fastener	Fig.825 Across Beam
Length of Fastener	N/A

Summary of Pipe within Zone of Influence

4" Sch.10 Steel Pipe (101.6 mm)	20 ft (6.1 m)
2" Sch.40 Steel Pipe (50.8 mm)	80 ft (24.4 m)

G-Factor Used 0.42
Allowance for Heads and Fittings 15%

Conclusions

Total Adjusted Load of Pipe in Zone of Influence	312 lbs (142 kg)
Material Capacity	1604 lbs (728 kg)
Fastener Capacity	1385 lbs (628 kg)
Fig. 1001 Clamp	1732 lbs (785 kg)
Fig.980 - 3/8" Universal Swivel	1385 lbs (628 kg)
Structural Member	WBeam

Calculations prepared by Collings & Associate:

* The description of the Structural Member is for informational purposes only.
TOLBrace™ software calculates the brace assembly only, not the structure it is attached to.
Calculated with TOLBrace™ 8
Visit us at www.tolco.com

SB1 LATERAL BRACE | 1

rrm design group
rrmdesign.com | (805) 543-1794
3765 SOUTH HIGUERA STREET, SUITE 102
SAN LUIS OBISPO, CA 93401

THE INCLUDED DRAWINGS, SPECIFICATIONS, IDEAS, DESIGNS AND ARRANGEMENTS REPRESENTED THEREBY ARE AND SHALL REMAIN THE PROPERTY OF RRM DESIGN GROUP AND NO PART THEREOF SHALL BE COPIED, DISCLOSED TO OTHERS OR USED IN CONNECTION WITH ANY WORK OR PROJECT OTHER THAN THE SPECIFIED PROJECT FOR WHICH THEY HAVE BEEN PREPARED AND DEVELOPED WITHOUT THE WRITTEN CONSENT OF RRM DESIGN GROUP. VISUAL CONTACT WITH THESE DRAWINGS OR SPECIFICATIONS SHALL CONSTITUTE CONCLUSIVE EVIDENCE OF ACCEPTANCE OF THESE RESTRICTIONS. SUBMITTAL OF THESE DOCUMENTS FOR PUBLIC AGENCY REVIEW SHALL NOT BE CONSIDERED A WAIVER OF RRM DESIGN GROUP'S RIGHTS.
RRM DESIGN GROUP COPYRIGHT 2023.
RRM IS A CALIFORNIA CORPORATION

CONSULTANT
COLLINGS & ASSOCIATES
FIRE PROTECTION ENGINEERING
260 MAPLE COURT, 241 VENTURA, CA 93003
PHONE: (805)658-0003 FAX: (805)658-0044
www.collingsandassociates.com

PROFESSIONAL ENGINEER — LICENSED — D. TED EDELMANN — FP 1847 — EXPIRES ON: 6/30/2024 — FIRE PROTECTION — STATE OF CALIFORNIA

PORTERVILLE COMMUNITY CENTER AND PARK
HENDERSON AVE., PORTERVILLE, CA 93257
SEISMIC BRACING CALCULATIONS

NO.	REVISION	DATE
△		
△		
△		
△		
△		
△		

Project Code/Flex

PROJECT MANAGER: A.Y.
DRAWN BY: C&A
CHECKED BY: T.D.
DATE: 2024.05.17
PROJECT NUMBER: 2883-01-RC22
SHEET: FP-6.0

SPECIFICATIONS FOR CONSTRUCTION

1 GENERAL NOTES

1.1 THESE DESIGN DOCUMENTS WERE PREPARED BY 'VORTEX AQUATIC STRUCTURES INTERNATIONAL' FOR THE USE OF THEIR CLIENT ONLY. THE MATERIAL USED AND IDENTIFIED IN THEM REFLECTS VORTEX AQUATIC STRUCTURES INTERNATIONAL'S BEST JUDGMENT IN LIGHT OF THE INFORMATION AVAILABLE AT THE TIME OF PREPARATION. FOR THE PURPOSE OFTHESE DESIGN DOCUMENTS, 'VORTEX AQUATIC STRUCTURES INTERNATIONAL' IS SYNONYMOUS WITH 'VORTEX'.

1.2 VORTEX ACCEPTS NO RESPONSIBILITY FOR DAMAGES, IF ANY, SUFFERED BY ANY THIRD PARTY AS A RESULT OF DECISIONS MADE OR ACTIONS BASED ON THESE DESIGN DOCUMENTS WITHOUT THE PREVIOUS CONSULTATION TO VORTEX.

1.3 ALL WORK, MATERIALS AND THEIR ASSEMBLIES SHALL CONFORM TO THE STANDARDS, REGULATIONS AND CODES CURRENTLY IN FORCE FOR ALL TRADES, AISC, ACNOR, EN, OR IBC.

1.4 THESE DESIGN DOCUMENTS DO NOT INDICATE THE METHOD OR MEANS OF CONSTRUCTION. WHEN APPLICABLE, THE CONTRACTORS SHALL SUPERVISE AND DIRECT ALL THE WORKAND SHALL BE SOLELY RESPONSIBLE FOR ALL CONSTRUCTION MEANS, METHODS, PROCEDURES AND SEQUENCES AS PER STANDARD BEST PRACTICES.

1.5 DO NOT SCALE DRAWINGS.

1.6 USE ONLY THOSE MARKED "ISSUED FOR CONSTRUCTION".

1.7 THE CONTRACTOR SHALL REVIEW THESE DESIGN DOCUMENTS AND REPORT ANY CONFLICTS OR OMISSIONS TO THE VORTEX IMMEDIATELY.

1.8 TEMPORARY SUPPORTS, WHICH WILL BE REQUIRED DURING CONSTRUCTION, SUCH AS FORMWORK, BRACING, SHORING, ETC. ARE NOT SHOWN ON THESE DRAWINGS AND ARE THERESPONSIBILITY OF THE CONTRACTOR. THE CONTRACTOR IS RESPONSIBLE TO ENSURE THAT ALL SAFE CONSTRUCTION PROCEDURES ARE FOLLOWED.

1.9 THE FOLLOWING SPECIFICATIONS ARE VORTEX'S MINIMUM RECOMMENDATIONS TO OBTAIN A QUALITY PRODUCT. THE CONTRACTOR SHALL FOLLOW THE LOCAL CODES IF MORE RESTRICTIVE.

1.10 ALL SEEFLOW COMPONENTS TO BE SNUG-TIGHT ONLY. USING POWER TOOLS OR TIGHTEN HARDWARE FULLY-TENSIONED CAN PRODUCE CRACKING ON THE PLASTIC.

2 EXCAVATION

2.1 ANY SHORING OR TEMPORARY SHORING NOT SHOWN ON DRAWINGS WILL BE EXECUTED, IN A SAFE MANNER, BY THE GENERAL CONTRACTOR.

2.2 IT IS THE RESPONSIBILITY OF OTHERS TO VERIFY THE EXISTENCE OF ANY UNDERGROUND SERVICES ETC.

2.3 IF AVAILABLE, REFER TO SOIL REPORT FOR BACKFILL REQUIREMENTS. ALL BACKFILL (FOR SLAB ON GRADE, ETC.) MUST BE DONE IN ACCORDANCE WITH THE RECOMMENDATIONS OF AQUALIFIED PROFESSIONAL. USE ONLY FREE DRAINING, GRANULAR, MINERAL, INERT AND NON- REACTIVE FILL.

3 FOUNDATIONS

3.1 REFER TO SOIL REPORT FOR RECOMMENDATIONS.

3.2 ALL FOOTINGS SHALL REST ON A HOMOGENEOUS LAYER OF UNDISTURBED SOIL OR ENGINEERED BACKFILL WITH A MINIMUM ALLOWABLE BEARING CAPACITY OF 100KPA (2000 PSF) AND MAXIMUM DIFFERENTIAL SETTLEMENT OF 0.75" (19mm). ALL ORGANIC MATERIAL SHALL BE REMOVED.

3.3 IT IS THE CONTRACTOR'S RESPONSIBILITY TO ENSURE THAT THE SOIL AT ALL FOOTING LOCATIONS BE VERIFIED BY A QUALIFIED SOILS EXPERT BEFORE POURING FOOTINGS TO ENSUREFOOTINGS REST ON APPROPRIATE STRATA.

3.4 WHEN APPLICABLE, FOLLOW GEOTECHNICAL EXPERT RECOMMENDATIONS FOR ALL EXTERIOR FOOTINGS TO ENSURE FROST PROTECTION.

4 CONCRETE

4.1 ALL CONCRETE MATERIALS, PROCEDURES, TOLERANCES & WORKMANSHIP SHALL CONFORM TO THE LATEST ISSUES OF ACI-318 AND ACI 317 OR ACNOR CAN3-A23.1 & A23.2, DEPENDING ON PROJECT LOCATION.

4.2 CONCRETE THAT HAS BEEN IN THE TRUCKS LONGER THAN 2 HOURS SHALL BE REJECTED. DO NOT ADD WATER TO THE CONCRETE IN THE TRUCKS OR ON THE SITE UNDER ANY CIRCUMSTANCES.

4.3 USE MAXIMUM 76mm (3") SLUMP, 19 MM (3/4") AGGREGATE, UNLESS OTHERWISE-NOTED. USE 5-7% AIR ENTRAINMENT FOR CONCRETE EXPOSED TO WEATHER ONLY.

4.4 ALL GROUT SHALL BE NON-SHRINK TYPE WITH A MINIMUM 28 DAYS STRENGTH OF 5000 PSI (35.0 MPa). USE 1" (25mm) GROUT UNDER ALL STEEL COLUMN BASE PLATES.

4.5 CONCRETE STRENGTH @ 28 DAYS TO BE:

4.5.1 FOUNDATIONS (FOOTINGS): 25.0 MPa (3500 PSI), UNLESS OTHERWISENOTED.

4.5.2 INTERIOR SLAB ON GRADE: 25.0 MPa (3500 PSI), UNLESS OTHERWISE NOTED.

4.5.3 EXTERIOR SLAB ON GRADE: 28.0 MPa (4000 PSI), UNLESS OTHERWISE NOTED.

4.6 MINIMAL RE-BAR COVER:

4.6.1 CONCRETE POURED ON-GRADE = 76mm (3") COVER

4.6.2 CONCRETE POURED INTO FORMWORK BUT EXPOSED TO SOIL AND WEATHER FOR REBAR 10M (#3) AND UNDER = 50mm (2") COVER

5 REINFORCING STEEL

5.1 DEPENDING ON PROJECT LOCATION, ALL REINFORCING STEEL SHALL CONFORM TO ASTM A615 (BARS 15m (#4) TO BE GRADE 60 WITH SUPPLEMENTARY REQUIREMENTS ON S1. BARS SMALLER THAN 15M (#4), TO BE GRADE 40); OR TO ACNOR GRADE G30.12 [FY = 400MPA (60,000 PSI), UNLESS OTHERWISE NOTED].

5.2 USE CONCRETE, PLASTIC OR STEEL SUPPORT BARS, AS PER ACI (MANUAL OF STANDARD PRACTICE FOR DETAILING CONCRETE STRUCTURES). THE RE-BAR PLACER MUST REMAIN ON-SITE DURING POURS TO VERIFY CORRECT POSITIONING OF RE-BARS. SLANT UPPER REINFORCING STEEL IN LINE WITH THE SLOPE OF THE SLAB, IF APPLICABLE.

5.3 BARS SHALL BE SECURELY WIRED PER LATEST EDITION OF CRSI (RECOMMENDED PRACTICE FOR PLACING REINFORCING BARS).

5.4 ALL REINFORCING STEEL IS TO BE KEPT CLEAN AND FREE OF MUD, SNOW, ICE, AND ANY CONTAMINANTS.

5.5 VERTICAL AND CONTINUOUS REBAR SHALL BE LAPPED TO DEVELOP FULL TENSILE CAPACITY OF THE BAR. FOR 15m (#4) BARS MINIMUM LAP OF 610mm (24").

6 EXTERIOR / INTERIOR SLAB ON GRADE

6.1 FOLLOW THE GEOTECHNICAL EXPERT RECOMMENDATIONS FOR PREPARATION OF SOIL BEFORE POURING THE CONCRETE. ALL GRANULAR MATERIAL SHALL BE MOISTENED IMMEDIATELY BEFORE POURING THE CONCRETE. WATER AS NEEDED. DO NOT USE A VAPOR BARRIER.

6.2 NO TRUCKS ARE PERMITTED ON THE CONSTRUCTION SITE (OF THE SLAB) AFTER THE FINAL COMPACTION, EITHER BEFORE OR DURING, THE POUR.

6.3 SLAB TO BE MINIMUM 6" THICK, REINFORCED WITH 10m (#3) @ 300mm (12") C/C REBAR PLACED IN BOTH DIRECTIONS AT MID-HEIGHT OF THE SLAB, UNLESS OTHERWISE NOTED ON PLANS.FOR ELEVATION/PLAYNUK REQUIREMENT OF THICKENED SLAB, REFER TO ELEVATION INSTALLATION PACKAGE FOR DETAILS.

6.4 REFER TO CONCRETE SECTION FOR MINIMUM COMPRESSIVE STRENGTH AND AIR-ENTRAINMENT REQUIREMENTS.

6.5 FINISHING WILL BE MEDIUM BROOM.

6.6 CONTROL JOINTS (SAW-CUTS) TO BE LOCATED IN EACH DIRECTION, AT REGULAR INTERVALS, WITH A MAXIMUM DISTANCE OF 3m (10'). SHALL BE MINIMUM 3mm (1/8") WIDE AND SHALL PENETRATE THE SLAB TO A MINIMUM DEPTH OF 1/3 OF THE THICKNESS OF THE SLAB. CONTROL JOINTS SHOULD BE DONE AS SOON AS POSSIBLE WITHOUT DAMAGING THE CONCRETE,BUT NO LATER THAN 18 HOURS AFTER POURING.

6.7 WHEN POSSIBLE AND TO AVOID SHRINKAGE CRACKING, HUMIDITY SHALL BE MAINTAINED FOR 7 DAYS DURING THE CURING PERIOD OF THE SLAB. WATER AND USE POLYETHYLENE CLOTH OR BAG. THE CONCRETE MUST DRY UNIFORMLY.

7 CONCRETE WORK IN COLD OR HOT WEATHER (MINIMUM REQUIREMENTS)

7.1 COLD WEATHER REQUIREMENTS APPLY WHEN THE MEAN AIR IS LESS THAN 5 DEGREES CELSIUS (40 DEGREES FAHRENHEIT).

7.2 GENERAL REQUIREMENTS FOR COLD WEATHER CONCRETE WORK SHALL BE AS PER ACI 306R-88; OR AS PER THE NBC'S LATEST REQUIREMENTS INCLUDING THE LATEST ISSUE OF CSA STANDARD CAN3-A23.1.

7.3 ALL SNOW AND ICE SHALL BE REMOVED FROM FORMS AND REBAR WITH STEAM AND COMPRESSED AIR BEFORE POURING. DO NOT USE DE-ICING SALT (CALCIUM CHLORIDE) OR ANY OTHER SALTS UNDER ANY CIRCUMSTANCES.

7.4 CONCRETE SHALL HAVE A MINIMUM TEMPERATURE OF 20 DEGREES CELSIUS AND A MAXIMUM TEMPERATURE OF 25 DEGREES CELSIUS WHILE POURING. IT IS THE CONTRACTOR'S RESPONSIBILITY TO ENSURE THAT THESE REQUIREMENTS ARE SATISFIED. ANY CONCRETE THAT DOES NOT CONFORM MUST BE REJECTED.

7.5 THE SURFACE OF POURED CONCRETE SHALL BE PROTECTED BY MEANS OF SUITABLE COVERINGS AND INSULATION (TO BE DETERMINED BY TEMPERATURE) DURING THE CURING PROCESS.

7.6 GENERAL REQUIREMENTS FOR HOT WEATHER CONCRETE WORK SHALL BE AS PER ACI 305R-99; OR AS PER LOCAL CODE REQUIREMENTS.

DATA-PLAN.

8 PIPING

8.1 WDS CONFIGURATION ARE SCHEMATIC AND MAY BE MOVED OR ADJUSTED ON SITE BY VORTEX CERTIFIED INSTALLER TO ADJUST FOR SITE CONDITIONS

8.2 ANY REQUIRED WATER METER ON THE CITY WATER MAIN SHALL BE PROVIDED BY INSTALLER, PRESSURE REGULATOR AND BACKFLOW PREVENTER ARE PROVIDED BY VORTEX.

8.3 ALL PIPE LINES TO FEATURES TO HAVE A 1% MINIMUM RECOMMENDED SLOPE FOR PROPER WINTERIZATION.

8.4 ALL LINE SIZING (FEATURE CONNECTION TABLE) ASSUMES A MAXIMUM DISTANCE OF 200 FEET BETWEEN THE WATER DISTRIBUTION MANIFOLD AND THE FURTHEST PLAY PRODUCT. DISTANCES ABOVE 200 FEET MAY REQUIRE AN INCREASE IN LINE SIZING. PLEASE CONTACT VORTEX.

8.5 QUANTITY AND LOCATION OF DRAINS BASED ON MAXIMUM FLOW FOR THE INDICATED PIPE DIAMETER AT 1% SLOPE. MODIFICATIONS MAY BE REQUIRED DUE TO SPECIFIC SITE CONDITIONS AND LOCAL CODE.

8.6 PRESSURE LINES ARE RECOMMENDED TO BE SCHEDULE 80 PVC OR PEX, AND NON-PRESSURE LINES TO BE SCHEDULE 40, UNLESS OTHERWISE REQUESTED BY LOCAL CODE.

8.7 DRAINAGE LINES ARE RECOMMENDED TO BE SDR 35, UNLESS OTHERWISE REQUESTED BY LOCAL CODE.

8.8 PIPING SHOULD BE INSPECTED AFTER TRANSPORTATION FOR CUTS, SCRATCHES, GOUGES OR SPLITS; DAMAGED SECTIONS MUST BE DISCARDED OR CUT OUT.

8.9 PIPE SHALL BE INSTALLED BELOW THE FROST LEVEL NOT LESS THAN 12" (ASTM F-645) UNLESS OTHERWISE REQUESTED BY LOCAL CODE.

8.10 PIPE INSTALLATION MINIMUM COVER SHOULD BE EVALUATED ACCORDING TO ASTM D-2774, UNLESS OTHERWISE REQUESTED BY LOCAL CODE.

8.11 SPECIAL CONSIDERATIONS SHOULD BE TAKEN FOR THERMAL CONDITIONS, EXPANSION AND CONTRACTIONS DUE TO TEMPERATURE SHOULD BE EVALUATED BEFORE THE INSTALLATION BY THE CONTRACTOR.

8.12 VALVE NUMBER 1 IS LOCATED TO THE LEFT OF THE MANIFOLD FACING THE SOLENOID.

8.13 MINIMUM 50 PSI REQUIRED AT THE INLET OF THE BACKFLOW PREVENTER AND PRESSURE REGULATING DEVICE.

8.14 MAXIMUM FLOW CAPACITY OF MANIFOLD IS 144 GPM.

8.15 TOTAL FLOW OF FEATURE IS 107 GPM.

8.16 FACTORY MAXIMUM SEQUENCING FLOW IS 75 GPM AND MAXIMUM AVERAGE FLOW IS 64 GPM. ACTUAL FLOW MAY VARY DUE TO SITE CONDITIONS.

9 ELECTRICAL

9.1 WIRING FROM THE CONTROLLER TO EACH ACTIVATOR SHALL BE #22 AWG. A TOTAL OF FIVE (5) CONDUCTORS PER ACTIVATOR.CABLE LENGTH UP TO 246' (75m), PROVIDED BY VORTEX.

9.2 ALL CONNECTIONS TO THE CONTROLLER AND OTHER VORTEX ELECTRICAL PANEL SHALL BE PERFORMED USING AN APPROVED NEMA 4X CONNECTOR.

9.3 WIRE FROM MAIN POWER TO VORTEX PANEL TO BE DETERMINED BY OTHERS RESPECTING THE LOCAL CODE.

9.4 MAINTAIN A MINIMUM CLEARANCE ZONE OF 36" IN FRONT OF ELECTRICAL PANEL, UNLESS OTHERWISE REQUESTED BY LOCAL CODE.

9.5 USE #8 BARE SOLID COPPER BONDING WIRE BETWEEN FEATURES TO A GROUNDING ROD IN THE SOIL, TIED INTO REBAR GRID, OR AS PER LOCAL CODE. SPRAYLINKS FEATURE DO NOT REQUIRE BONDING.

9.6 AS PER ELECTRICAL CONSTRUCTION AND SAFETY CODES: CONTROLLER CONTROLLER AND ANY OTHER ELECTRICAL ENCLOSURES MUST BE HARD-WIRED TO A GROUND FAULT CIRCUIT INTERRUPTER (GFCI) FROM THE INPUT POWER SOURCE.

9.7 ALL ELECTRICAL WORK SHOULD BE PERFORMED BY A LICENCE ELECTRICIAN IN ACCORDANCE TO LOCAL ELECTRICAL CONSTRUCTION AND SAFETY CODES.

9.8 THE MAESTROPRO CONTROL PANEL IS POWERED THROUGH A MAESTROPRO POWER BOX.

9.9 THE POWER CABLE TO MAESTROPRO POWER BOX IS SUPPLIED BY INSTALLER.

9.10 THE MAESTROPRO CONTROL PANEL INTEGRATES 24 DIGITAL OUTPUTS WITH 24 VAC AND 12 DIGITAL INPUTS.

9.11 FOR REMOTE ACCESS ABILITY, A HARD CONNECTION TO AN EXISTING NETWORK IS REQUIRED USING A CAT 5 CABLE OR A CELLULAR NANO-SIM CARD WITH DATA-PLAN.

9.12 ALL WIRES AND CABLES SHALL BE BRAND NEW AND APPROVED ACCORDING TO LOCAL CODE.

9.13 CABLE SPECIFICATION GIVEN BY VORTEX MUST BE RESPECTED (REFER TO INSTALLATION DRAWING)

9.14 FAILURE TO FOLLOW THE RECOMMENDED WIRE GAUGE SPECIFICATIONS MIGHT LEAD TO SERVICE FAILURES AND/OR CABLE DAMAGE.

9.15 CABLE LENGTH FOR LEDs IS CALCULATED ON ESTIMATION BASED ON HORIZONTAL PLANE ONLY. FINAL LENGTH MUST BE VALIDATED PRIOR TO INSTALLATION BY THE INSTALLER.

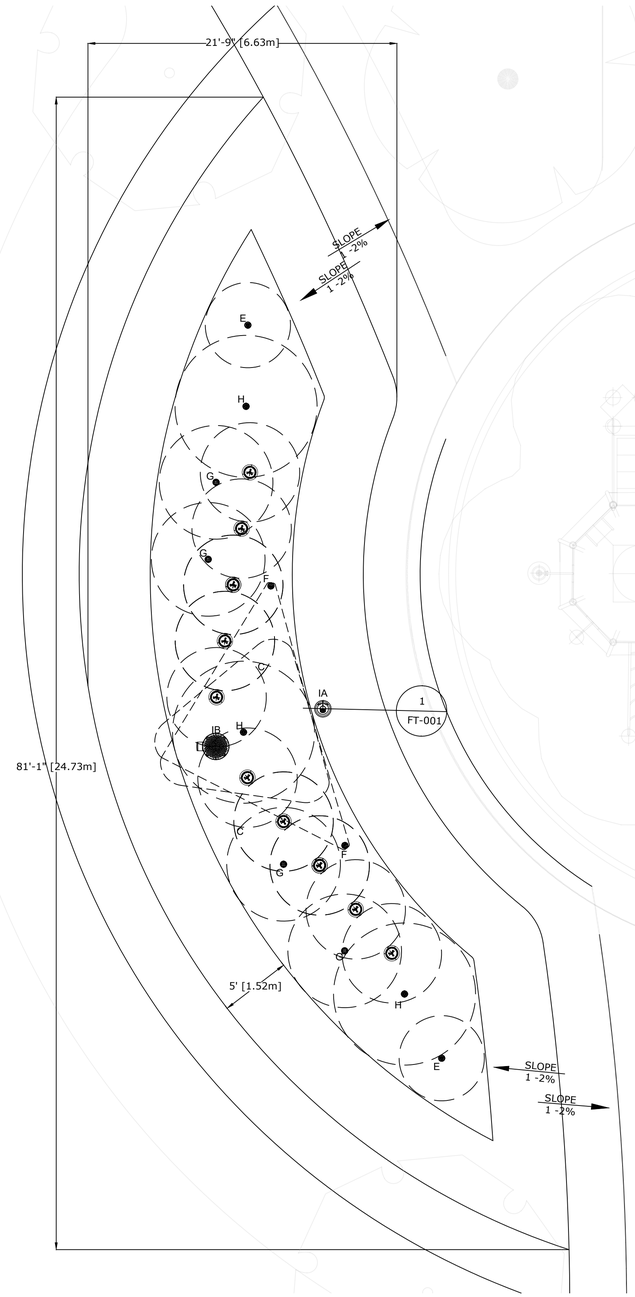

1 / A-001 SPRAY ZONE & FEATURE PLAN

1. 5'[1.5M] SPRAY FREE AREA ALL AROUND THE SPLASHPAD
2. RECOMMENDED SLOPE: 1-2% TOWARDS DRAINAGE.
3. COORDINATE THESE DRAWINGS WITH ARCHITECTURAL , CIVIL, PLUMBING & ELECTRICAL SECTIONS.

SPLASHPAD INFORMATION

TOTAL AREA :	1427 ft²	133 m²
SPRAY AREA :	595 ft²	55 m²
TOTAL FLOW:	107 GPM	

PRODUCT LEGEND

Ref	Product	Qty
IA	Activator N°3 VOR 0611	1
IB	Playsafe Drain N°4 VOR 1004	1
C	CoreoPlay Sunset VOR 7060	2
E	Spraylink Podspray VOR 3009	2
F	Spraylink Fan VOR 3004	2
G	Spraylink Jet N°2 VOR 3001	4
H	Spraylink Geyser VOR 3005	3

Abbreviations	
A	Architectural
C	Civil Work
P	Plumbing Layout
PD	Plumbing Details
E	Electrical Layout
ED	Electrical Details
FT	Feature Drawings

Drawing #	Drawing Name	Rev #
A-001	Spray Zone Layout	00
A-002	Site Layout	03
A-003	Anchor Plan	00
C-001	Embed Details	00
C-002	Embed Details	00
P-001	Plumbing Layout	03
P-002	Plumbing Layout	02
PD-001	Plumbing Details	00
PD-002	Plumbing Details	00
E-001	Electrical Layout	02
ED-001	Electrical Details	00
FT-001	Feature Drawings	00

VORTEX
VORTEX AQUATIC STRUCTURES INTERNATIONAL

VORTEX USA Inc.
3500 South Dupont Highway, Suite EP-101
Dover, Delaware
United States 19901
Phone: +1 (877) 586-7839

COPYRIGHT VORTEX AQUATIC STRUCTURES INTERNATIONAL-THIS DOCUMENT AND THE IDEAS, RENDERINGS AND OTHER CONTENTS CONTAINED THEREIN ARE THE SOLE PROPETY OF VORTEX AQUATIC STRUCTURES INTERNATIONAL AND MAY NOT BE DISSEMINATED, COPIED, REPRODUCED OR OTHERWISE USED WITHOUT PRIOR WRITTEN CONSENT OF VORTEX AQUATIC STRUCTURES INTERNATIONAL.

Fourth St. Community Center & Park

Project Location
Porterville,CA

Project Number
40740

Order Number
VA

Date	Revision Description	No.	By
23/Jan/2024	Issued for Permit	00	OD

Drawing Title
Spray Zone Layout

Drawn by	Verified by
MS	MAB
Scale: 3/16"=1'-0"	Date: 23/Jan/2024

Page # A-001

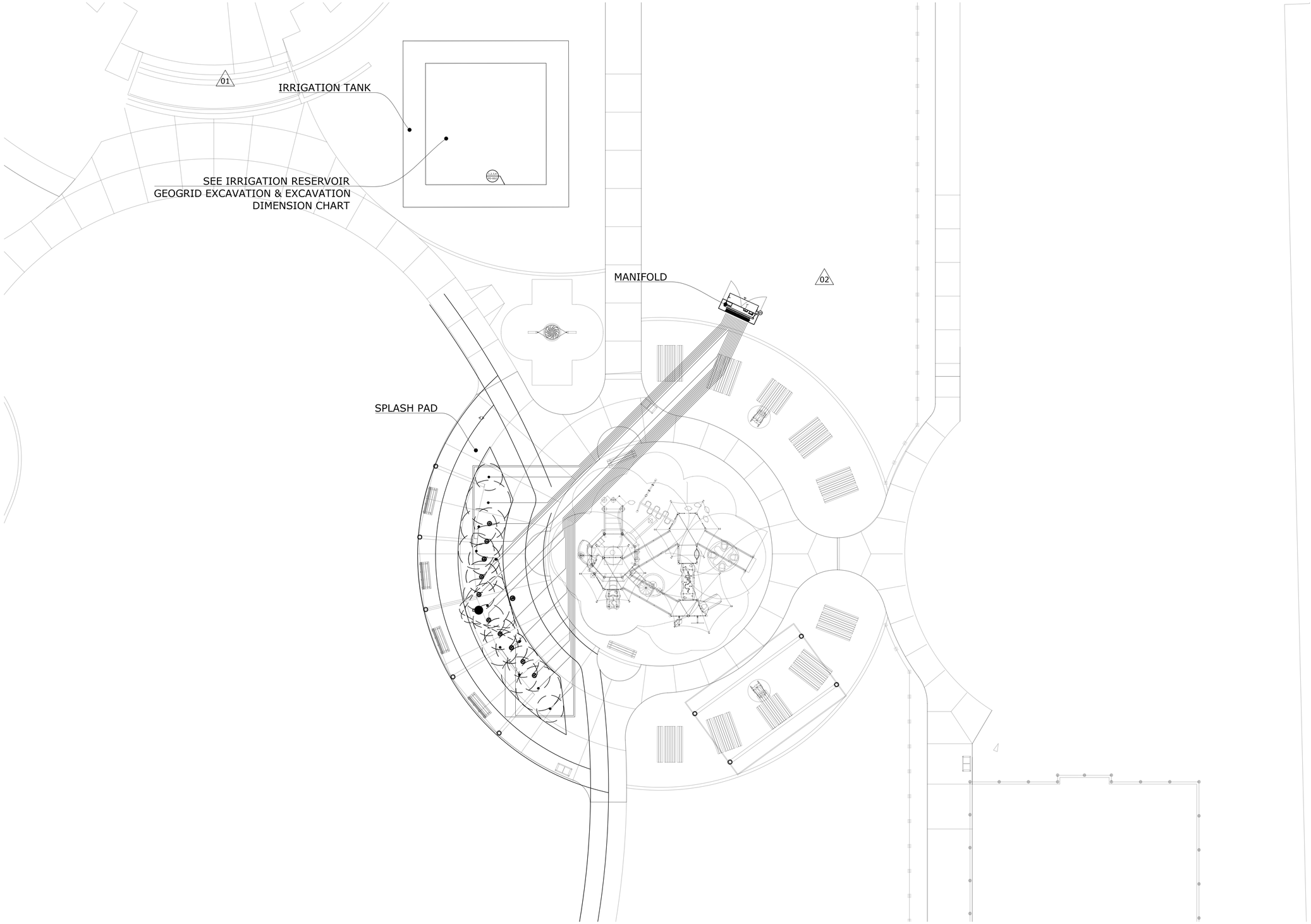

1 / A-002 SITE LAYOUT

VORTEX
VORTEX AQUATIC STRUCTURES INTERNATIONAL

VORTEX USA Inc.
3500 South Dupont Highway, Suite EP-101
Dover, Delaware
United States 19901
Phone: +1 (877) 586-7839

COPYRIGHT VORTEX AQUATIC STRUCTURES INTERNATIONAL-THIS DOCUMENT AND THE IDEAS, RENDERINGS AND OTHER CONTENTS CONTAINED THEREIN ARE THE SOLE PROPETY OF VORTEX AQUATIC STRUCTURES INTERNATIONAL AND MAY NOT BE DISSEMINATED, COPIED, REPRODUCED OR OTHERWISE USED WITHOUT PRIOR WRITTEN CONSENT OF VORTEX AQUATIC STRUCTURES INTERNATIONAL.

Fourth St. Community Center & Park

Project Location
Porterville,CA

Project Number
40740

Order Number
VA

Date	Revision Description	No.	By
23/Jan/2024	Issued for Permit	03	MS
12/Jan/2024	Re-Issued for Approval	02	MS
13/Dec/2023	Re-Issued for Approval	01	MS
18/Sep/2023	Issued for Approval	00	BR

Drawing Title
Site Layout

Drawn by
MS

Verified by
MAB

Scale
3/32"=1'-0"

Date
23/Jan/2024

Page #
A-002

Ref	Product	Qty
IA	Activator N°3 VOR 0611	1
IB	Playsafe Drain N°4 VOR 1004	1
C	CoreoPlay Sunset VOR 7060	2
E	Spraylink Podspray VOR 3009	2
F	Spraylink Fan VOR 3004	2
G	Spraylink Jet N°2 VOR 3001	4
H	Spraylink Geyser VOR 3005	3

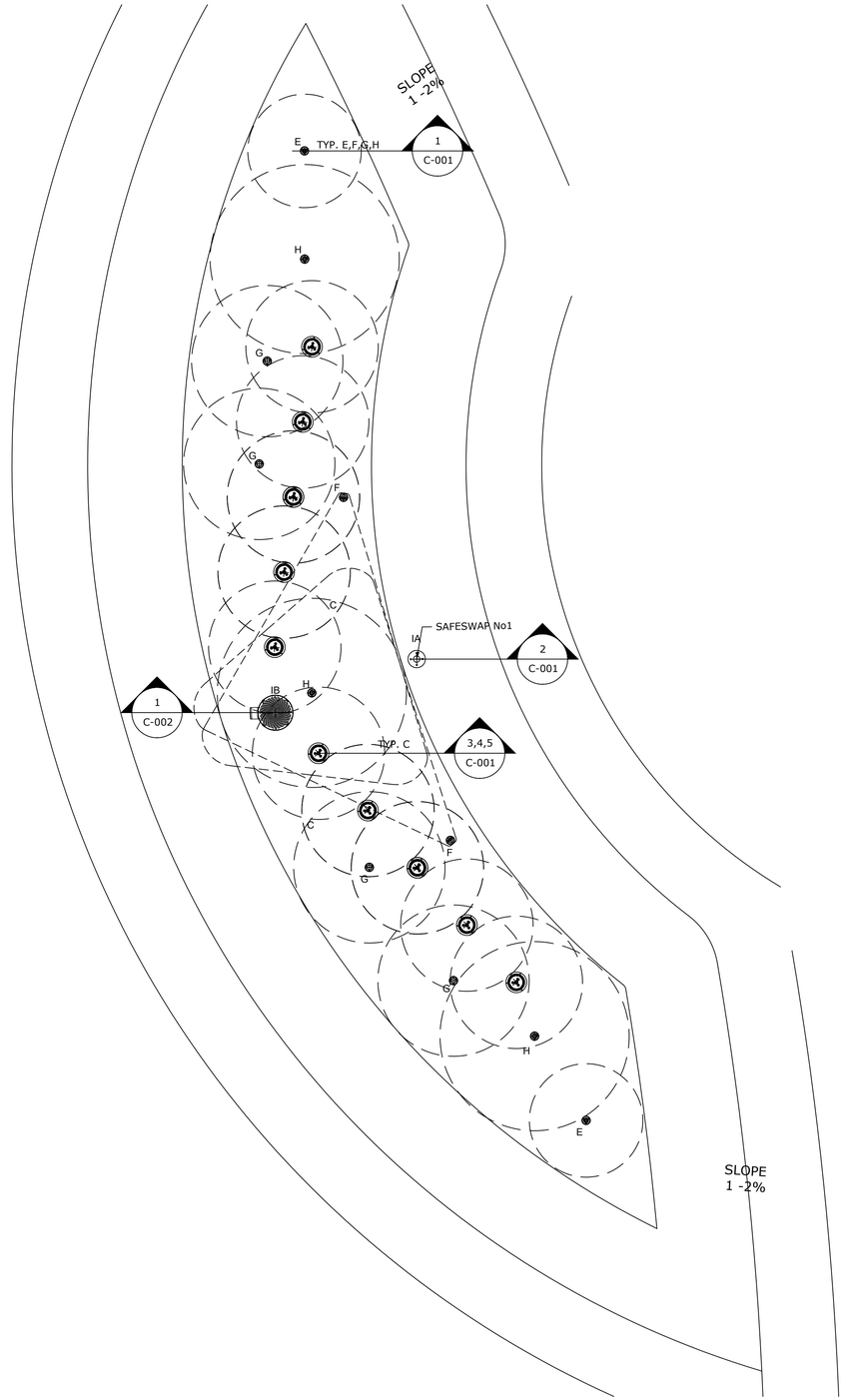

1
A-003

ANCHOR PLAN

1. REFER TO SPECIFICATIONS ON A-001
2. COORDINATE THESE DRAWINGS WITH ARCHITECTURAL, CIVIL, PLUMBING & ELECTRICAL SECTIONS.

VORTEX
VORTEX AQUATIC STRUCTURES INTERNATIONAL

VORTEX USA Inc.
3500 South Dupont Highway, Suite EP-101
Dover, Delaware
United States 19901
Phone: +1 (877) 586-7839

COPYRIGHT VORTEX AQUATIC STRUCTURES INTERNATIONAL-THIS DOCUMENT AND THE IDEAS, RENDERINGS AND OTHER CONTENTS CONTAINED THEREIN ARE THE SOLE PROPETY OF VORTEX AQUATIC STRUCTURES INTERNATIONAL AND MAY NOT BE DISSEMINATED, COPIED, REPRODUCED OR OTHERWISE USED WITHOUT PRIOR WRITTEN CONSENT OF VORTEX AQUATIC STRUCTURES INTERNATIONAL.

Fourth St. Community Center & Park

Project Location
Porterville,CA

Project Number
40740

Order Number
VA

Date	Revision Description	No.	By
23/Jan/2024	Issued for Permit	00	OD

Drawing Title
Anchor Plan

Drawn by	Verified by
MS	MAB

Scale	Date
1/4"=1'-0"	23/Jan/2024

Page #
A-003

NOTES:

1) "BY INSTALLER/BY CONTRACTOR" MAY REFER TO SERVICE PROVIDERS OTHER THAN THE EQUIPMENT MANUFACTURER. PLEASE REFER TO PROJECT SPECIFICATION FOR DETAILS OF RESPONSIBILITY.

2) POLYMER ENCAPSULATED ASSEMBLY NO EARTH GROUNDING AND NO BONDING RECOMMENDED FOR SPRAYLINK™ SYSTEM FOLLOW LOCAL CODE

3) REFER TO INSTALLATION GUIDE FOR MORE DETAILS.

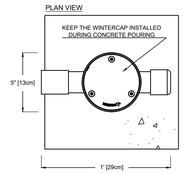

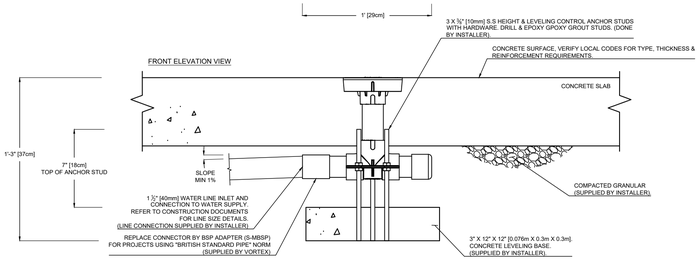

1 / C-001 Spraylink Anchor - (1 1/2" Inlet)

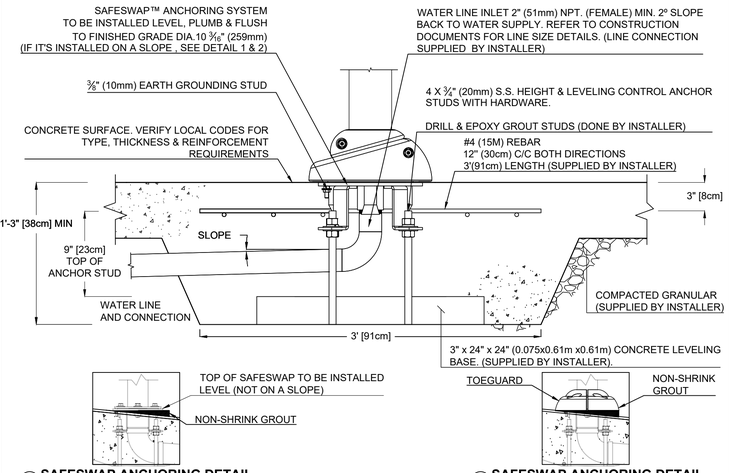

1 SAFESWAP ANCHORING DETAIL

2 SAFESWAP ANCHORING DETAIL

2 / C-001 Safeswap No. 1 Anchor TYP.

VOR-55000.0430

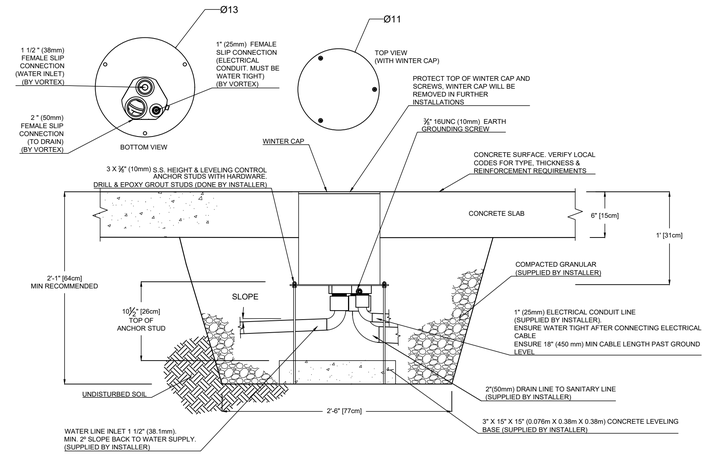

3 / C-001 Coreplay Sunset (Lumiflow)

VOR-7060.4XXX

NOTES TO THE INSTALLER:

1. CABLE SPECIFICATIONS GIVEN BY VORTEX MUST BE RESPECTED.
2. MAXIMUM OF 1 LEDS PER LINE FOR A MAXIMUM OF 12 LEDS LIGHTS PER POWER PACK.
3. MAXIMUM CABLE LENGTH : 200FT PER LINE.
4. MAXIMUM CABLE LENGTH HAS BEEN CALCULATED CONSIDERING THAT THE WIRING WOULD BE INSTALLED ON AN HORIZONTAL PLANE.
5. ALL WIRES AND CABLES SHALL BE BRAND NEW AND APPROVED ACCORDING TO LOCAL CODE.
6. FAILURE TO FOLLOW VORTEX APPLICATION GUIDELINES, DRAWINGS, WIRING DIAGRAM & CABLE SPECIFICATIONS WILL VOID PRODUCT WARRANTY.

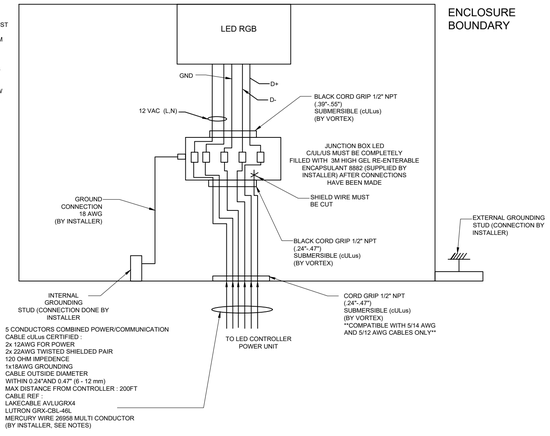

4 / C-001 Coreplay Sunset (Lumiflow)

VOR-7060.4XXX

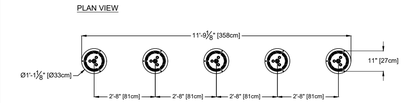

NOTES:

1) SEE THE PIPING AND CONNECTION DIAGRAM FOR PLACEMENT AND DRAINAGE NEEDED.

2) DISTANCE BETWEEN JETS CAN BE CHANGED, BUT WATCH OUT FOR SPRAYZONE CHANGE. AGAIN REFER TO PIPING AND CONNECTION DIAGRAM

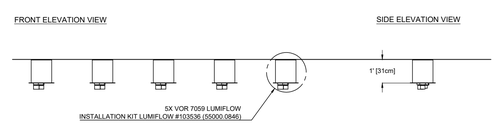

5 / C-001 Coreplay Sunset (Lumiflow)

VOR-7060.4XXX

VORTEX
VORTEX AQUATIC STRUCTURES INTERNATIONAL

VORTEX USA Inc.
3500 South Dupont Highway, Suite EP-101
Dover, Delaware
United States 19901
Phone: +1 (877) 586-7839

COPYRIGHT VORTEX AQUATIC STRUCTURES INTERNATIONAL-THIS DOCUMENT AND THE IDEAS, RENDERINGS AND OTHER CONTENTS CONTAINED THEREIN ARE THE SOLE PROPETY OF VORTEX AQUATIC STRUCTURES INTERNATIONAL AND MAY NOT BE DISSEMINATED, COPIED, REPRODUCED OR OTHERWISE USED WITHOUT PRIOR WRITTEN CONSENT OF VORTEX AQUATIC STRUCTURES INTERNATIONAL.

Fourth St. Community Center & Park

Project Location
Porterville,CA

Project Number
40740

Order Number
VA

Date	Revision Description	No.	By
23/Jan/2024	Issued for Permit	00	OD

Drawing Title
Embed Details

Drawn by: MS
Verified by: MAB
Scale: N.T.S
Date: 23/Jan/2024

Page # C-001

PLAN VIEW

Note:
1- Cover plate must be install during concrete pouring.

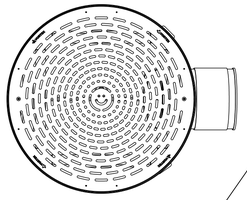

STRAINER BASKET
PART #: 33400.2100
STAINLESS STEEL 304 | THICKNESS: 14 GA
SQUARE OPENINGS: 0.15" (3.8mm)
(SOLD SEPARATELY)

ADD SIKAFLEX MARINE GRADE SILICONE SEALANT
ON THE OUTSIDE AND ON THE INSIDE:
- BETWEEN DRAINAGE BOX & SEAL
- BETWEEN SEAL & SUPPLIED 6" PIPE
(LEAVE THE 6 " PIPE EXTENDED BY 1/2" FROM THE SEAL INSIDE THE DRAINAGE BOX)

⅜" (10mm) BONDING STUD

ANCHORING SYSTEM TO BE INSTALLED LEVEL, PLUMB & FLUSH TO FINISHED GRADE(BY INSTALLER)

4 X 1/2" (13mm) S.S. HEIGHT & LEVELING CONTROL ANCHOR STUDS WITH HARDWARE.(BY VORTEX)
DRILL & EPOXY GROUT STUDS (DONE BY INSTALLER)

CONCRETE SURFACE. VERIFY LOCAL CODES FOR TYPE, THICKNESS & REINFORCEMENT REQUIREMENTS (BY INSTALLER)
VIBRATE WELL THE CONCRETE AROUND THE DRAIN

WATER LINE OUTLET 6" (152mm). MIN. 1% SLOPE.
(LINE CONNECTION SUPPLIED BY INSTALLER)

FRONT ELEVATION VIEW

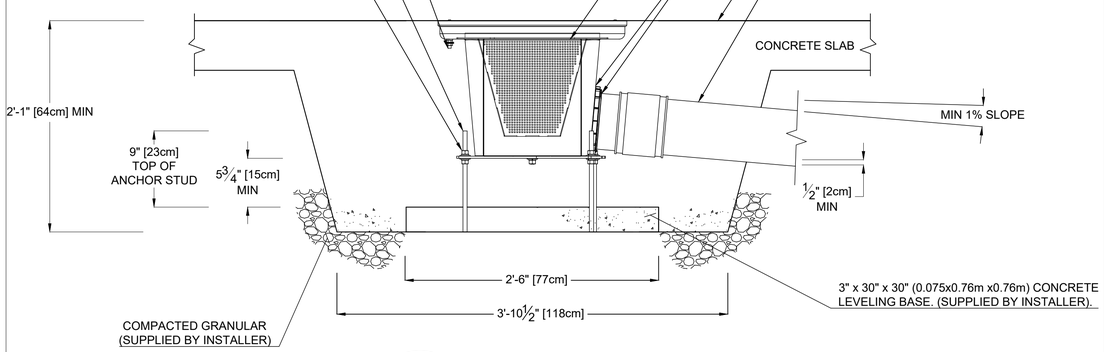

1 / C-002 **Playsafe Drain No. 4**
VOR-1004.4000

VORTEX
VORTEX AQUATIC STRUCTURES INTERNATIONAL

VORTEX USA Inc.
3500 South Dupont Highway, Suite EP-101
Dover, Delaware
United States 19901
Phone: +1 (877) 586-7839

COPYRIGHT VORTEX AQUATIC STRUCTURES INTERNATIONAL-THIS DOCUMENT AND THE IDEAS, RENDERINGS AND OTHER CONTENTS CONTAINED THEREIN ARE THE SOLE PROPETY OF VORTEX AQUATIC STRUCTURES INTERNATIONAL AND MAY NOT BE DISSEMINATED, COPIED, REPRODUCED OR OTHERWISE USED WITHOUT PRIOR WRITTEN CONSENT OF VORTEX AQUATIC STRUCTURES INTERNATIONAL.

Fourth St. Community Center & Park

Project Location
Porterville,CA

Project Number
40740

Order Number
VA

Date	Revision Description	No.	By
23/Jan/2024	Issued for Permit	00	OD

Drawing Title
Embed Details

Drawn by	Verified by
MS	MAB

Scale	Date
N.T.S	23/Jan/2024

Page #
C-002

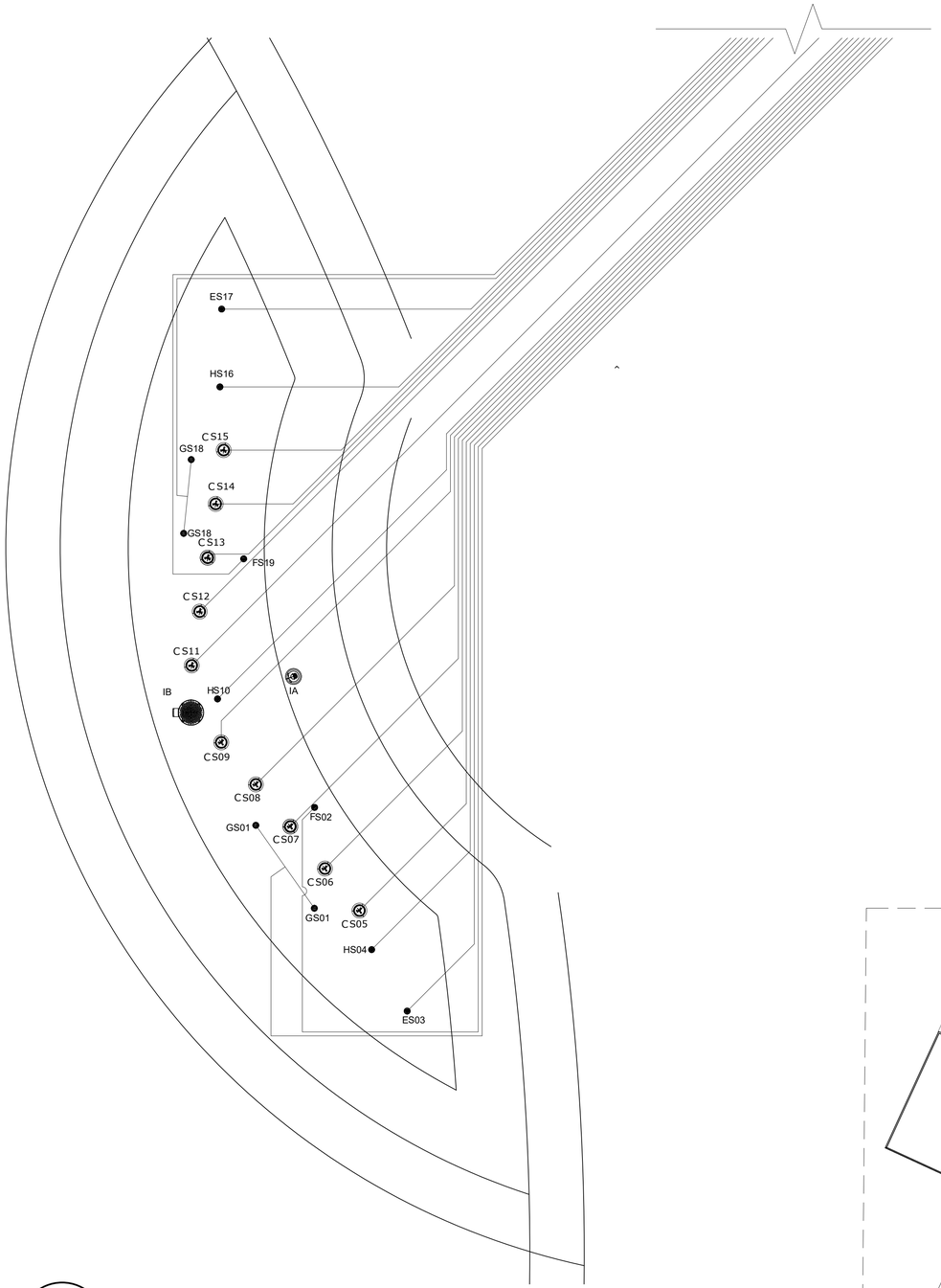

1 P-001 PLUMBING LAYOUT

1. REFER TO SPECIFICATIONS ON A-001
2. COORDINATE THESE DRAWINGS WITH ARCHITECTURAL, CIVIL, PLUMBING & ELECTRICAL SECTIONS.

WATER LINE ————————

DRAIN LINE — — — — — —

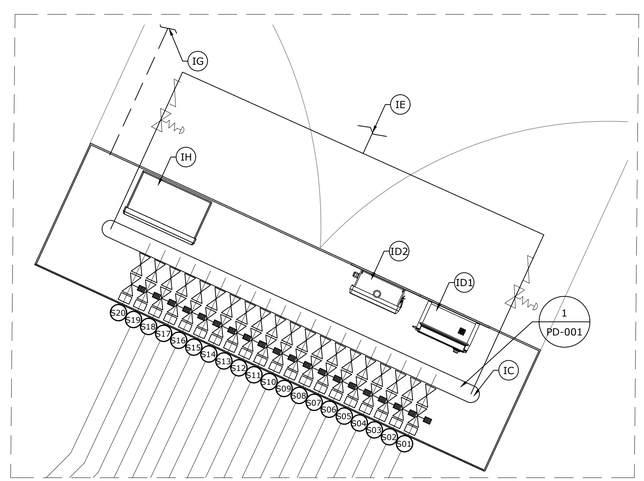

2 P-001 PLUMBING LAYOUT

SCALE: 3/4"=1'-0"

Feature Connection Table

Manifold Output Ref.	Solenoid Valve	Feature Ref.	Feature	Qty	Line Size	Gpm
S01	1" Std	G	Spraylink Jet Nº2 VOR 3001	2	1 1/2"	10
S02	1" Std	F	Spraylink Fan VOR 3004	1	1"	7
S03	1" Std	E	Spraylink Podspray VOR 3009	1	1"	4
S04	1" Std	H	Spraylink Geyser VOR 3005	1	1"	5
S05	1" Std	C	CoreoPlay Sunset VOR 7060	1	1"	5
S06	1" Std				1"	5
S07	1" Std				1"	5
S08	1" Std				1"	5
S09	1" Std				1"	5
S10	1" Std	H	Spraylink Geyser VOR 3005	1	1"	5
S11	1" Std	C	CoreoPlay Sunset VOR 7060	1	1"	5
S12	1" Std				1"	5
S13	1" Std				1"	5
S14	1" Std				1"	5
S15	1" Std				1"	5
S16	1" Std	H	Spraylink Geyser VOR 3005	1	1"	5
S17	1" Std	E	Spraylink Podspray VOR 3009	1	1"	4
S18	1" Std	G	Spraylink Jet Nº2 VOR 3001	2	1 1/2"	10
S19	1" Std	F	Spraylink Fan VOR 3004	1	1"	7

Product Legend

Product Ref.	Product	Qty
IA	Bollard Activator No 3 VOR 0611	1
IB	Playsafe Drain Nº4 VOR 1004	1
IC	Water Distribution System; ECCC Cabinet Command Center 2.0 40740D2307R01	1
ID1	MaestroPRO Controller 24 out/ 12 in VOR-33907.3200	1
ID2	MaestroPRO Power Box VOR-33907.3200	1
01 IE	3" City Water Line (by Other)	1
IF	6" Drain line To Irrigation Tank (by Other)	1
IG	4" TYP Drain Line With Strainer Connected to Drainage System. Ensure P-Trap is Below Frost Line to Prevent Freezing. (by Other)	1
IH	Lumiflow Power Box VOR-33908.4030	1
	2" Pressure Regulator (by Vortex)	2
	2" Backflow Preventer (by Vortex)	2
	1" Solenoid Valve with Ball Valve (by Vortex)	19

VORTEX
VORTEX AQUATIC STRUCTURES INTERNATIONAL

VORTEX USA Inc.
3500 South Dupont Highway, Suite EP-101
Dover, Delaware
United States 19901
Phone: +1 (877) 586-7839

COPYRIGHT VORTEX AQUATIC STRUCTURES INTERNATIONAL-THIS DOCUMENT AND THE IDEAS, RENDERINGS AND OTHER CONTENTS CONTAINED THEREIN ARE THE SOLE PROPETY OF VORTEX AQUATIC STRUCTURES INTERNATIONAL AND MAY NOT BE DISSEMINATED, COPIED, REPRODUCED OR OTHERWISE USED WITHOUT PRIOR WRITTEN CONSENT OF VORTEX AQUATIC STRUCTURES INTERNATIONAL.

Fourth St. Community Center & Park

Project Location
Porterville,CA

Project Number
40740

Order Number
VA

Date	Revision Description	No.	By
23/Jan/2024	Issued for Permit	03	MS
12/Jan/2024	Re-Issued for Approval	02	MS
13/Dec/2023	Re-Issued for Approval	01	MS
18/Sep/2023	Issued for Approval	00	BR

Drawing Title
Plumbing Layout

Drawn by: MS
Verified by: MAB
Scale: 3/16"=1'-0"
Date: 23/Jan/2024
Page #: P-001

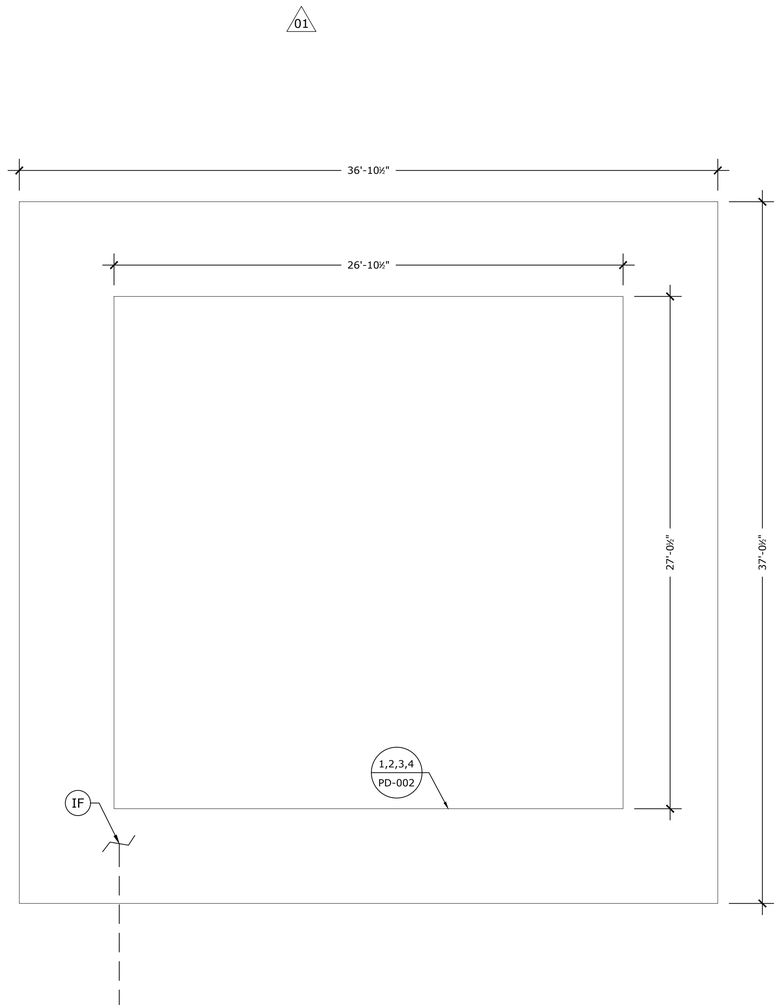

2 P-002 DRAINAGE LAYOUT

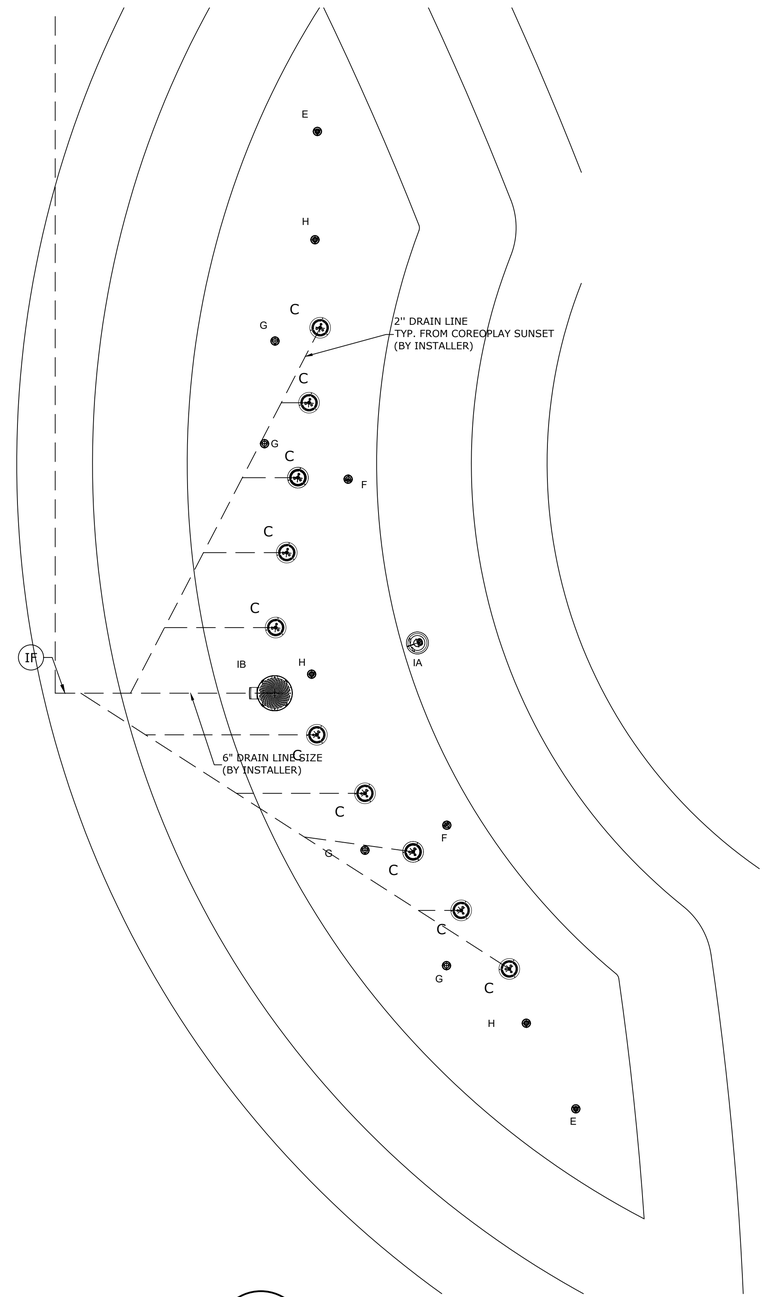

1 P-002 DRAINAGE LAYOUT

DRAIN LINE — — — — — —

Product Legend		
Product Ref.	Product	Qty
IF	6" Drain line To Irrigation Tank (by Other)	1

Water Reservoir Dimension	
Height	7'-1 1/2"
Width	26'-10 1/2"
Lenght	27'-1/2"

Water Reservoir Excavation Dimension	
Height	10'-7 1/2"
Width	30'-10 1/2"
Lenght	31'-1/2"

Water Reservoir Geogrid Dimension	
Height	2'-6"
Width	36'-10 1/2"
Lenght	37'-1/2"

VORTEX
VORTEX AQUATIC STRUCTURES INTERNATIONAL

VORTEX USA Inc.
3500 South Dupont Highway, Suite EP-101
Dover, Delaware
United States 19901
Phone: +1 (877) 586-7839

COPYRIGHT VORTEX AQUATIC STRUCTURES INTERNATIONAL-THIS DOCUMENT AND THE IDEAS, RENDERINGS AND OTHER CONTENTS CONTAINED THEREIN ARE THE SOLE PROPETY OF VORTEX AQUATIC STRUCTURES INTERNATIONAL AND MAY NOT BE DISSEMINATED, COPIED, REPRODUCED OR OTHERWISE USED WITHOUT PRIOR WRITTEN CONSENT OF VORTEX AQUATIC STRUCTURES INTERNATIONAL.

Fourth St. Community Center & Park

Project Location
Porterville,CA

Project Number
40740

Order Number
VA

Date	Revision Description	No.	By
23/Jan/2024	Issued for Permit	02	MS
13/Dec/2023	Re-Issued for Approval	01	MS
18/Sep/2023	Issued for Approval	00	BR

Drawing Title
Drainage Layout

Drawn by	Verified by
MS	MAB

Scale	Date
1/4"=1'-0"	23/Jan/2024

Page #
P-002

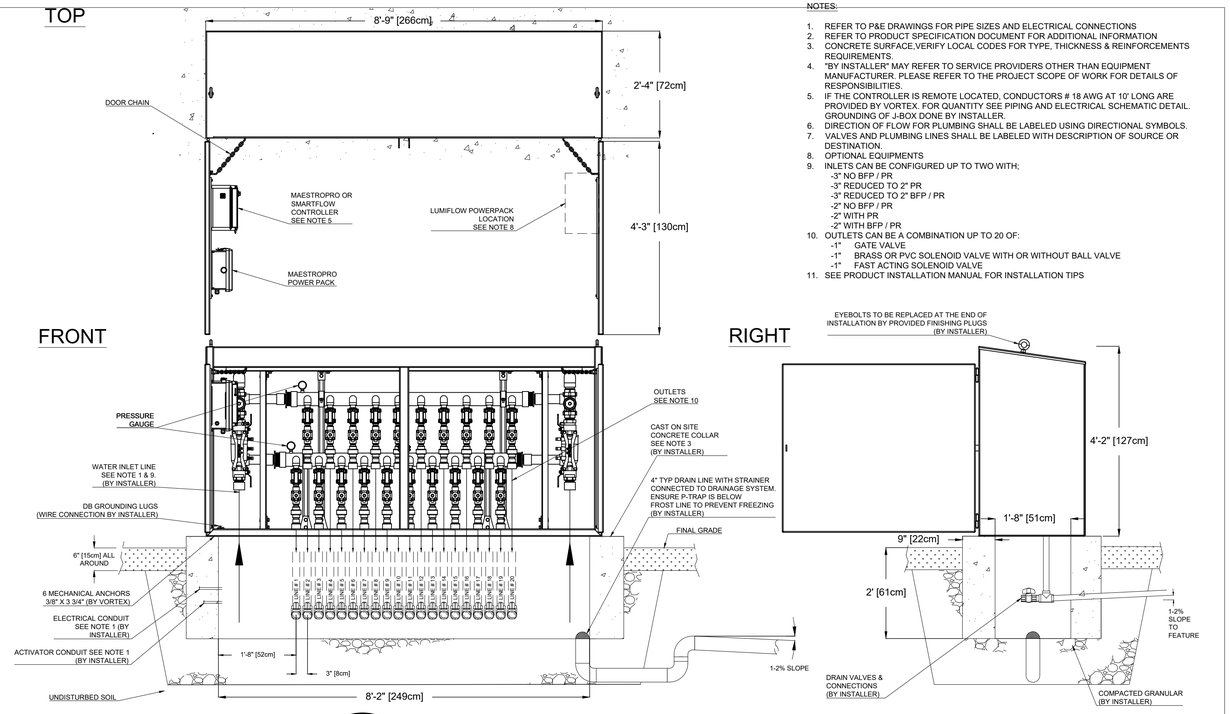

1 / PD-001 ECCC Cabinet Command Center 2.0

NOTES:

1. REFER TO P&E DRAWINGS FOR PIPE SIZES AND ELECTRICAL CONNECTIONS
2. REFER TO PRODUCT SPECIFICATION DOCUMENT FOR ADDITIONAL INFORMATION
3. CONCRETE SURFACE,VERIFY LOCAL CODES FOR TYPE, THICKNESS & REINFORCEMENTS REQUIREMENTS.
4. "BY INSTALLER" MAY REFER TO SERVICE PROVIDERS OTHER THAN EQUIPMENT MANUFACTURER. PLEASE REFER TO THE PROJECT SCOPE OF WORK FOR DETAILS OF RESPONSIBILITIES.
5. IF THE CONTROLLER IS REMOTE LOCATED, CONDUCTORS # 18 AWG AT 10' LONG ARE PROVIDED BY VORTEX. FOR QUANTITY SEE PIPING AND ELECTRICAL SCHEMATIC DETAIL. GROUNDING OF J-BOX DONE BY INSTALLER.
6. DIRECTION OF FLOW FOR PLUMBING SHALL BE LABELED USING DIRECTIONAL SYMBOLS.
7. VALVES AND PLUMBING LINES SHALL BE LABELED WITH DESCRIPTION OF SOURCE OR DESTINATION.
8. OPTIONAL EQUIPMENTS
9. INLETS CAN BE CONFIGURED UP TO TWO WITH;
   - -3" NO BFP / PR
   - -3" REDUCED TO 2" PR
   - -3" REDUCED TO 2" BFP / PR
   - -2" NO BFP / PR
   - -2" WITH PR
   - -2" WITH BFP / PR
10. OUTLETS CAN BE A COMBINATION UP TO 20 OF:
    - -1" GATE VALVE
    - -1" BRASS OR PVC SOLENOID VALVE WITH OR WITHOUT BALL VALVE
    - -1" FAST ACTING SOLENOID VALVE
11. SEE PRODUCT INSTALLATION MANUAL FOR INSTALLATION TIPS

VORTEX
VORTEX AQUATIC STRUCTURES INTERNATIONAL

VORTEX USA Inc.
3500 South Dupont Highway, Suite EP-101
Dover, Delaware
United States 19901
Phone: +1 (877) 586-7839

COPYRIGHT VORTEX AQUATIC STRUCTURES INTERNATIONAL-THIS DOCUMENT AND THE IDEAS, RENDERINGS AND OTHER CONTENTS CONTAINED THEREIN ARE THE SOLE PROPETY OF VORTEX AQUATIC STRUCTURES INTERNATIONAL AND MAY NOT BE DISSEMINATED, COPIED, REPRODUCED OR OTHERWISE USED WITHOUT PRIOR WRITTEN CONSENT OF VORTEX AQUATIC STRUCTURES INTERNATIONAL.

Fourth St. Community Center & Park

Project Location
Porterville,CA

Project Number
40740

Order Number
VA

Date	Revision Description	No.	By
23/Jan/2024	Issued for Permit	00	OD

Drawing Title
Plumbing Details

Drawn by	Verified by
MS	MAB
Scale: N.T.S	Date: 23/Jan/2024

Page #
PD-001

NOTE:

1- FOR DETAILS ON RESERVOIR SPECIFICATIONS, DIMENSIONS AND EXCAVATION DIMENSIONS REFER TO THE INFORMATION TABLE.

2- REFER TO SIZING CHART FOR TOTAL FLOW, OPERATION HOURS AND RUN TIME PERCENTAGE. IF THESE VALUES ARE EXCEEDED, THERE MAY BE EXCESS WATER WHICH WILL GO TO SANITARY.

3- COARSE WASHED SAND, COMPACTED TO AT LEAST 95% STANDARD PROCTOR IN 6" (150mm) LIFTS. FREE FROM LUMPS AND WITH NO CLAY OR SILT PARTICLES TO ENSURE HIGH PERMEABILITY. SPREAD MATERIAL USING LIGHTWEIGHT POWERED MECHANICAL COMPACTOR OR ROLLER WITHOUT VIBRATION NOT EXCEEDING 1,542 POUNDS PER FOOT WIDTH (2,300kg PER METER WIDTH).

4- DO NOT WALK ON MATRIX TANK UNTIL MINIMUM OF 6" (150mm) COMPACTED SAND. EXERCISE CARE WHEN PLACING THE TWO FIRST 6" (150mm) LIFT ON MATRIX TANK. SPREAD MATERIAL USING LIGHTWEIGHT POWERED MECHANICAL COMPACTOR. THE NEXT 6" (150mm) LIFT MAY BE PLACED USING LIGHTWEIGHT EQUIPMENT WITH TRACKS NOT EXCEEDING 6 PSI (41 kNPa) OF GROUND PRESSURE OR ROLLER WITHOUT VIBRATION NOT EXCEEDING 1,542 POUNDS PER FOOT WIDTH (2,300kg PER METER WIDTH). PLACE AT LEAST 20" (500mm) OF MATERIAL AND BLADE DOWN TO 12" (300mm), WHERE REQUIRED, THEN COMPACT TO 95%. ULTIMATE COMPRESSION STRENGTH TO 4 PLATE TANK IS 31 PSI (22 METRIC TON/m2).

5- THE MINIMUM LAYER SHOULD BE FROM THE SURFACE OF THE GEOGRID TO THE TANK (TOP TO BOTTOM DIRECTION) IS 12" (300mm). TOP BACKFILL FOR PEDESTRIAN TRAFFIC (MAXIMUM 300 PSF (1465 kg/m2) LIVE LOAD) IS 12"-20" (300mm-500mm), AND 24"-40" (600mm-1000mm) FOR OCCASIONAL LIGHTWEIGHT VEHICULAR TRAFFIC (MAXIMUM 7700 LBS (3.5 METRIC TON)). MAXIMUM TOP BACKFILL IS 6' (1800mm).

6- TOP BACKFILL ABOVE GEOGRID EXTENSION BEYOND THE TANK EXCAVATION CAN BE EITHER COARSE WASHED SAND COMPACTED TO 95% STANDARD PROCTOR OR EXCAVATED SOIL.

7- GROUND FOUNDATION WITH CLAY PROFILES MUST BE APPROVED BY A STRUCTURAL ENGINEER. WATER TABLE MUST BE AT LEAST 3' (0.91m) BELOW THE BOTTOM OF THE TANK.

8- EXCAVATION MUST BE AT A MINIMAL DISTANCE FROM EXISTING STRUCTURES:

SAND	PERCOLATION RATE: > 7.08in/hr (180mm/hr)	MINIMAL DISTANCE 39.5" (1m)
SANDY CLAY	PERCOLATION RATE: 1.42-7.08in/hr (36-180mm/hr)	MINIMAL DISTANCE 79" (2m)
WEATHERED OR FRACTURED ROCK	PERCOLATION RATE: 0.14-1.42in/hr (3.6-36mm/hr)	MINIMAL DISTANCE 79" (2m)
MEDIUM CLAY	PERCOLATION RATE: 0.14-1.42in/hr (3.6-36mm/hr)	MINIMAL DISTANCE 158" (4m)
HEAVY CLAY	PERCOLATION RATE: 0.001-0.14in/hr (0.036-3.6mm/hr)	MINIMAL DISTANCE 197" (5m)

SHORTER DISTANCES MUST BE APPROVED BY A GEOTECHNICAL ENGINEER.

9- EXCAVATION FOR LIGHT POLES, CLOSED CIRCUIT TELEVISION POLES OR ANY ABOVE OR BELOW GROUND STRUCTURE MUST BE AT LEAST 197" (5m) AWAY FROM TANK EXCAVATION. PILLING MACHINERY MUST BE KEPT AT LEAST 10' (3m) AWAY FROM TANK EXCAVATION AND CONSTRUCTION TRAFFIC, 16.5' (5m) AWAY. SHORTER DISTANCES MUST BE APPROVED BY A GEOTECHNICAL ENGINEER.

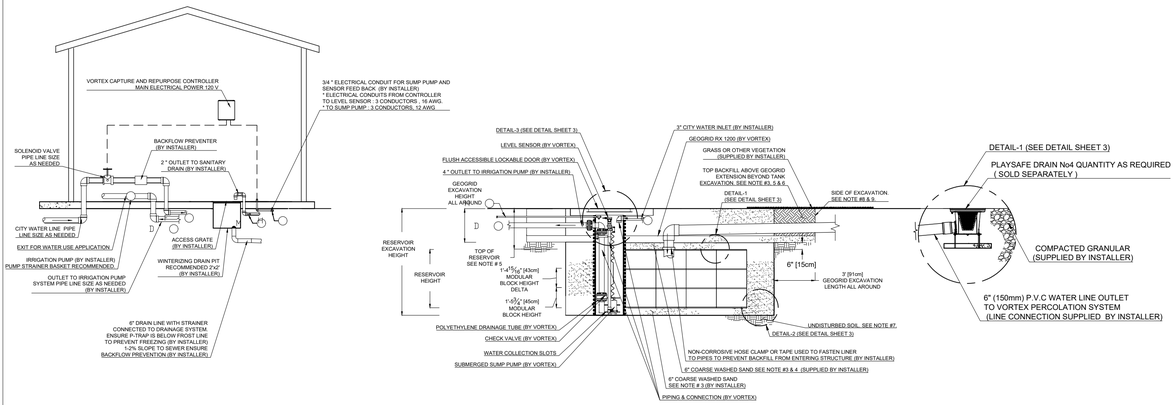

1 / PD-002 WCRS Subsurface Irrigation Near Splashpad

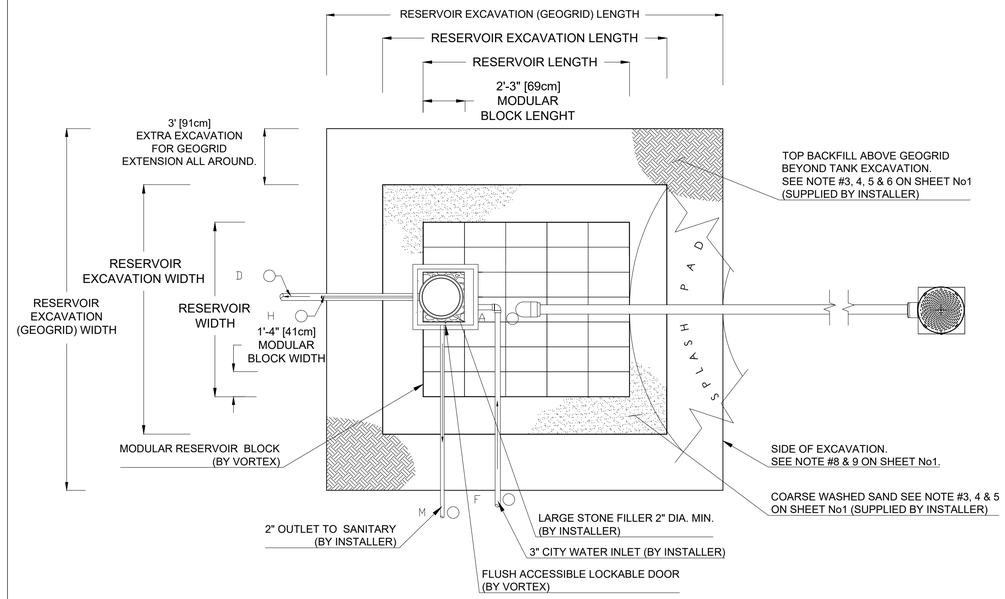

2 / PD-002 WCRS Subsurface Irrigation Near Splashpad

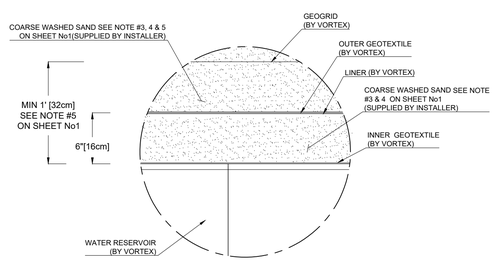

DETAIL -3

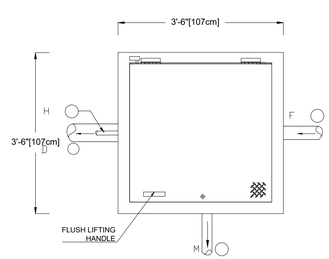

DETAIL -2

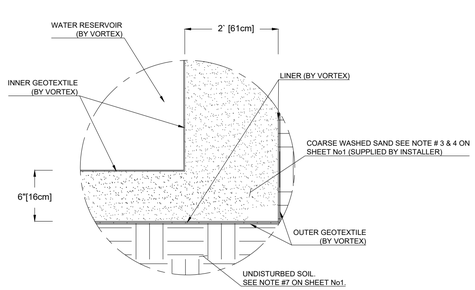

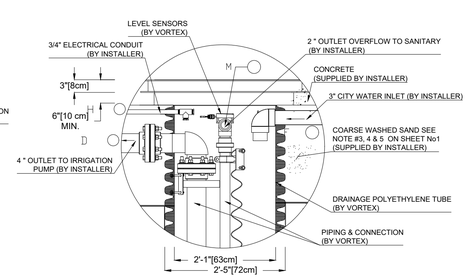

3 / PD-002 WCRS Subsurface Irrigation Near Splashpad

Information Table for Subsurface Irrigation System Installation Drawing				
Reservoir Spec's	**Value**	**Units**		
Volume of Storage Reservoir	36,755	gallons		
Top of Reservoir Level	3	ft		
Number of Blocks (Height)	5	unit		
Number of Blocks (Width)	20	unit		
Number of Blocks (Length)	12	unit		
Reservoir Dimensions	**Value**	**Units**	**Value**	**Units**
Reservoir Height	7' - 1 1/2"	ft	217	cm
Reservoir Width	26' - 10 1/2"	ft	819	cm
Reservoir Length	27' - 1/2"	ft	824	cm
Excavation Dimensions	**Value**	**Units**	**Value**	**Units**
Excavation Height	10' - 7 1/2"	ft	324	cm
Excavation Width	30' - 10 1/2"	ft	941	cm
Excavation Length	31' - 1/2"	ft	946	cm
Excavation (Geogrid) Dimensions	**Value**	**Units**	**Value**	**Units**
Excavation (Geogrid) Height	2' - 6"	ft	76	cm
Excavation (Geogrid) Width	36' - 10 1/2"	ft	1124	cm
Excavation (Geogrid) Length	37' - 1/2"	ft	1129	cm

4 / PD-002 WCRS Subsurface Irrigation Near Splashpad

VORTEX
VORTEX AQUATIC STRUCTURES INTERNATIONAL

VORTEX USA Inc.
3500 South Dupont Highway, Suite EP-101
Dover, Delaware
United States 19901
Phone: +1 (877) 586-7839

COPYRIGHT VORTEX AQUATIC STRUCTURES INTERNATIONAL-THIS DOCUMENT AND THE IDEAS, RENDERINGS AND OTHER CONTENTS CONTAINED THEREIN ARE THE SOLE PROPETY OF VORTEX AQUATIC STRUCTURES INTERNATIONAL AND MAY NOT BE DISSEMINATED, COPIED, REPRODUCED OR OTHERWISE USED WITHOUT PRIOR WRITTEN CONSENT OF VORTEX AQUATIC STRUCTURES INTERNATIONAL.

Fourth St. Community Center & Park

Project Location
Porterville,CA

Project Number
40740

Order Number
VA

Date	Revision Description	No.	By
23/Jan/2024	Issued for Permit	00	OD

Drawing Title
Plumbing Details

Drawn by MS | Verified by MAB

Scale N.T.S | Date 23/Jan/2024

Page # PD-002

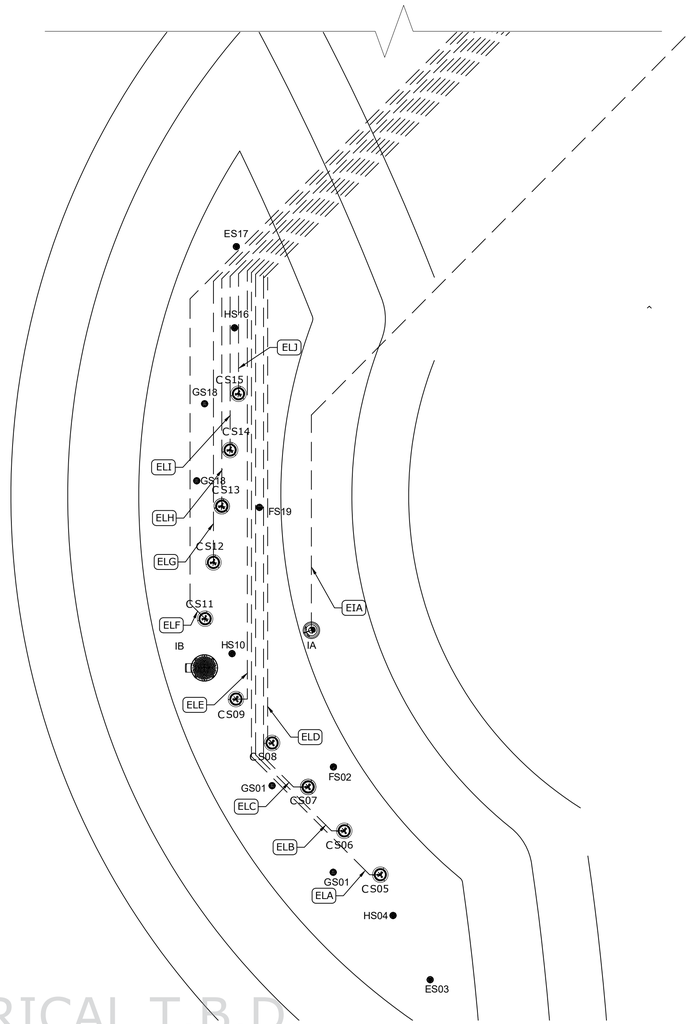

1 E-001 ELECTRICAL LAYOUT

WCRS ELECTRICAL T.B.D.

01

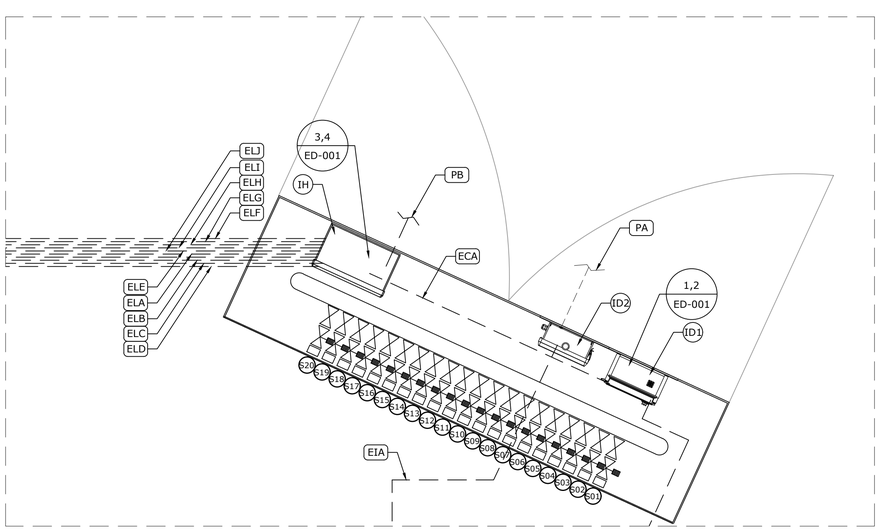

2 E-001 ELECTRICAL LAYOUT

SCALE: 3/4"=1'-0"

Feature Connection Table

Manifold Output Ref.	Feature Ref.	Feature	Output (ID1)
S01	G	Spraylink Jet N°2 VOR 3001	1
S02	F	Spraylink Fan VOR 3004	2
S03	E	Spraylink Podspray VOR 3009	3
S04	H	Spraylink Geyser VOR 3005	4
S05	C	CoreoPlay Sunset VOR 7060	5
S06			6
S07			7
S08			8
S09			9
S10	H	Spraylink Geyser VOR 3005	10
S11	C	CoreoPlay Sunset VOR 7060	11
S12			12
S13			13
S14			14
S15			15
S16	H	Spraylink Geyser VOR 3005	16
S17	E	Spraylink Podspray VOR 3009	17
S18	G	Spraylink Jet N°2 VOR 3001	18
S19	F	Spraylink Fan VOR 3004	19

Product Legend

Product Ref.	Product	Qty
IA	Bollard Activator No 3 VOR 0611	1
ID1	MaestroPRO Controller 24 out/ 12 in VOR-33907.3200	1
ID2	MaestroPRO Power Box VOR-33907.3200	1
IH	Lumiflow Power Box VOR-33908.4030	1

Electrical Line Connections Power

Product Code	From	To	# Conductors	Gauge/ Type	Note
PA	Main Power Line (by Owner)	ID2-120VAC	3	TBD (by other)	120V, 1 Phase, 60Hz & 10 Amps Breaker Recommended; ± 5% Voltage Drop is Acceptable
PB	Main Power Line (by Owner)	IH-120VAC	3	TBD (by other)	120V, 1 Phase, 60Hz & 10 Amps Breaker Recommended; ± 5% Voltage Drop is Acceptable

Electrical Line Connections Controller Inputs

Connection Ref.	From	To	# Conductors	Gauge/Type	Note
EIA	ID1-Input 1	IA	5	22	Bollard Activator N°3 , 24 VDC, Max 345 mA, 246' (75m) Long Cable (by Vortex)

Ethernet Communication Connections (EC'X')

Connection Ref.	From	To	# Conductors	Gauge/Type	Note
ECA	ID1	IH	Cable	CAT5	Signal from Maestropro Controller to Lumiflow Power box, Max 300' Long (by Installer)

Lumiflow and LED Lights Electrical Connections (EL'X')

Connection Ref.	From	To	Color Group	Feature / Light Sync.	# Conductors	Gauge / Type	Note
ELA	IH	CS05	G1	C05	5(per LED Line) 2 PWR/12VAC, 2 COM/ DMX, 1GRD	2PWR/12 AWG, 2 COM/22 AWG (Shielted/Twisted), 120 OHM Impedence GRD/18 AWG	Signal from Lumiflow Power Box to Lumiflow, Max 200' Long (by Installer)
ELB	IH	CS06	G2	C06	5(per LED Line) 2 PWR/12VAC, 2 COM/ DMX, 1GRD	2PWR/12 AWG, 2 COM/22 AWG (Shielted/Twisted), 120 OHM Impedence GRD/18 AWG	Signal from Lumiflow Power Box to Lumiflow, Max 200' Long (by Installer)
ELC	IH	CS07	G3	C07	5(per LED Line) 2 PWR/12VAC, 2 COM/ DMX, 1GRD	2PWR/12 AWG, 2 COM/22 AWG (Shielted/Twisted), 120 OHM Impedence GRD/18 AWG	Signal from Lumiflow Power Box to Lumiflow, Max 200' Long (by Installer)
ELD	IH	CS08	G4	C08	5(per LED Line) 2 PWR/12VAC, 2 COM/ DMX, 1GRD	2PWR/12 AWG, 2 COM/22 AWG (Shielted/Twisted), 120 OHM Impedence GRD/18 AWG	Signal from Lumiflow Power Box to Lumiflow, Max 200' Long (by Installer)
ELE	IH	CS09	G5	C09	5(per LED Line) 2 PWR/12VAC, 2 COM/ DMX, 1GRD	2PWR/12 AWG, 2 COM/22 AWG (Shielted/Twisted), 120 OHM Impedence GRD/18 AWG	Signal from Lumiflow Power Box to Lumiflow, Max 200' Long (by Installer)
ELF	IH	CS11	G6	C11	5(per LED Line) 2 PWR/12VAC, 2 COM/ DMX, 1GRD	2PWR/12 AWG, 2 COM/22 AWG (Shielted/Twisted), 120 OHM Impedence GRD/18 AWG	Signal from Lumiflow Power Box to Lumiflow, Max 200' Long (by Installer)
ELG	IH	CS12	G7	C12	5(per LED Line) 2 PWR/12VAC, 2 COM/ DMX, 1GRD	2PWR/12 AWG, 2 COM/22 AWG (Shielted/Twisted), 120 OHM Impedence GRD/18 AWG	Signal from Lumiflow Power Box to Lumiflow, Max 200' Long (by Installer)
ELH	IH	CS13	G8	C13	5(per LED Line) 2 PWR/12VAC, 2 COM/ DMX, 1GRD	2PWR/12 AWG, 2 COM/22 AWG (Shielted/Twisted), 120 OHM Impedence GRD/18 AWG	Signal from Lumiflow Power Box to Lumiflow, Max 200' Long (by Installer)
ELI	IH	CS14	G9	C14	5(per LED Line) 2 PWR/12VAC, 2 COM/ DMX, 1GRD	2PWR/12 AWG, 2 COM/22 AWG (Shielted/Twisted), 120 OHM Impedence GRD/18 AWG	Signal from Lumiflow Power Box to Lumiflow, Max 200' Long (by Installer)
ELJ	IH	CS15	G10	C15	5(per LED Line) 2 PWR/12VAC, 2 COM/ DMX, 1GRD	2PWR/12 AWG, 2 COM/22 AWG (Shielted/Twisted), 120 OHM Impedence GRD/18 AWG	Signal from Lumiflow Power Box to Lumiflow, Max 200' Long (by Installer)

VORTEX
VORTEX AQUATIC STRUCTURES INTERNATIONAL

VORTEX USA Inc.
3500 South Dupont Highway, Suite EP-101
Dover, Delaware
United States 19901
Phone: +1 (877) 586-7839

COPYRIGHT VORTEX AQUATIC STRUCTURES INTERNATIONAL-THIS DOCUMENT AND THE IDEAS, RENDERINGS AND OTHER CONTENTS CONTAINED THEREIN ARE THE SOLE PROPETY OF VORTEX AQUATIC STRUCTURES INTERNATIONAL AND MAY NOT BE DISSEMINATED, COPIED, REPRODUCED OR OTHERWISE USED WITHOUT PRIOR WRITTEN CONSENT OF VORTEX AQUATIC STRUCTURES INTERNATIONAL.

Fourth St. Community Center & Park

Project Location
Porterville,CA

Project Number
40740

Order Number
VA

Date	Revision Description	No.	By
23/Jan/2024	Issued for Permit	02	MS
12/Jan/2024	Re-Issued for Approval	01	MS
18/Sep/2023	Issued for Approval	00	BR

Drawing Title
Electrical Layout

Drawn by: MS
Verified by: MAB
Scale: 3/16"=1'-0"
Date: 23/Jan/2024
Page #: E-001

INSTALLATION DRAWING - DIMENSIONS FOR MAESTROPRO ENCLOSURES 33907.XXBX

NOTE:
1 - ENSURE ENOUGH CLEARANCE FOR THE DOOR OPENING

MAESTROPRO CONTROL ENCLOSURE

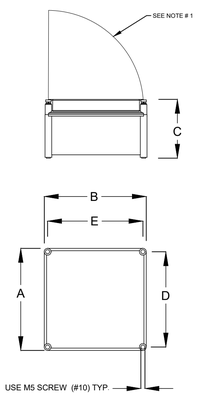

MAESTROPRO POWER BOX ENCLOSURE

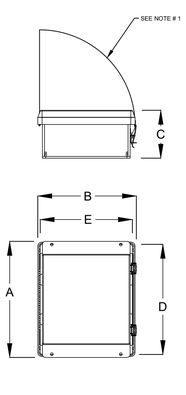

MAESTROPRO ENCLOSURES DIMENSIONS

REFERENCE No.	DESCRIPTION	DIM "A"	DIM "B"	DIM "C"	DIM "D"	DIM "E"
33907.12B2	MAESTROPRO CTRL 24OUT/12IN 120VAC/240HZ	11.88"	11.88"	6.85"	11.08"	11.08"
33907.22B2	MAESTROPRO CTRL EXP 24OUT/12IN 120VAC/240HZ	11.88"	11.88"	6.85"	11.08"	11.08"
33907.13B0	MAESTROPRO POWERBOX 24OUT/12IN 120VAC/60HZ	12.308"	10.215"	5.57"	12.058"	9.965"
33907.13B1	MAESTROPRO POWERBOX 24OUT/12IN 240VAC/50HZ	12.308"	10.215"	5.57"	12.058"	9.965"

REFER TO THE PIPING AND ELECTRICAL SHEET FOR THE CONTROLLER NUMBER

1 / ED-001 MaestroPro Controller
VOR- 33907.3200

INSTALLATION DRAWING - MAESTROPRO CTRL 33907.12B2 AND MAESTROPRO POWER BOX 33907.13BX CONNECTIONS

NOTE:
1 - A MAXIMUM OF 1 ETHERNET CAT 5 CONNECTIONS IS AVAILABLE PER MAESTROPRO.
IF MORE ETHERNET LAN CONNECTIONS ARE NEEDED, THEN IT REQUIRES AN ETHERNET SWITCH BOX (SOLD SEPARATELY).
2 - FOR DIGITAL INPUT, 5-24 VDC SUPPLIED BY MAESTROPRO. REFER TO THE CORRESPONDING SCHEMATIC DRAWING MANUAL FOR WIRING DETAILS.
3 - MAESTROPRO IS DHCP ADDRESSED BY CONNECTED LAN DEVICE.
4- WHEN USED WITH EXPANSION UNITS, AN ETHERNET CAT 5 CABLE IS REQUIRED BETWEEN EACH UNIT.
5- WATER TIGHT CONNECTIONS WITH MAESTROPRO DONE BY INSTALLER.
6- ALL WIRES AND CABLES ELECTRICAL CALCULATION ARE BY INSTALLER AND SHALL BE APPROVED ACCORDING TO LOCAL CODE AND BRAND NEW.

CIRCUIT BREAKER & FUSE	AMPS MAX	CIRCUIT
MAIN BREAKER; 3 AMPS	4 MAX	PRIMARY 120/240 VAC
FUSE 1; 5 AMPS	5 MAX	SECONDARY 24 VAC
FUSE 2; 5 AMPS	5 MAX	SECONDARY 24 VAC
FUSE 3; 5 AMPS	5 MAX	POWER SUPPLY 24 VDC

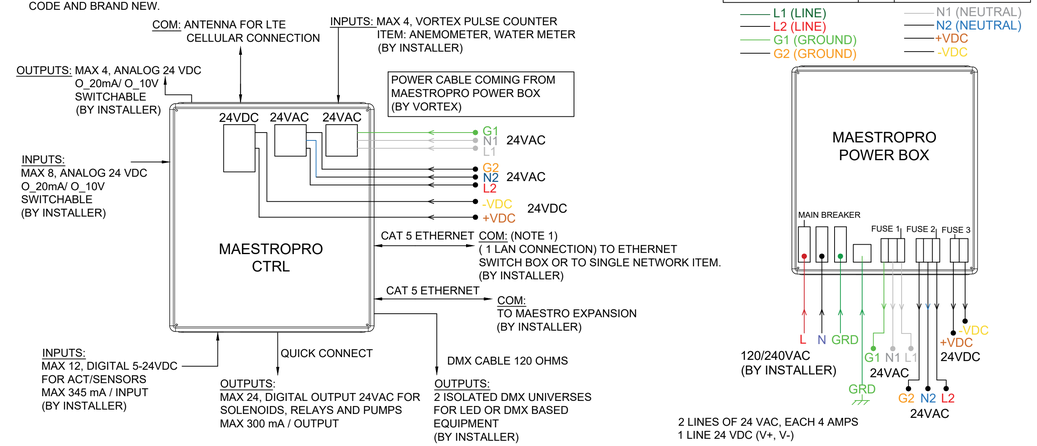

2 / ED-001 MaestroPro Controller
VOR- 33907.3200

NOTE:
1 - ENSURE ENOUGH CLEARANCE FOR THE DOOR OPENING
2 - MAX 12 LEDs PER POWER PACK
3 - MAX 1 LED PER LINE

LUMIFLOW POWER PACK FAMILY

- 33908.4030 - 120VAC
- 33908.4031 - 240VAC

DIMENSIONS

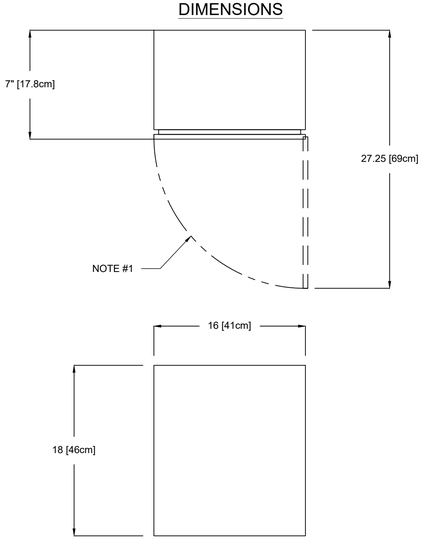

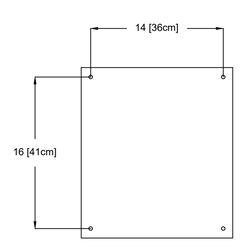

BACK VIEW
WALL ANCHORAGE

3 / ED-001 Lumiflow Power Pack UL/CE Certified
VOR- 33908.4030

FIELD WIRING DIAGRAM

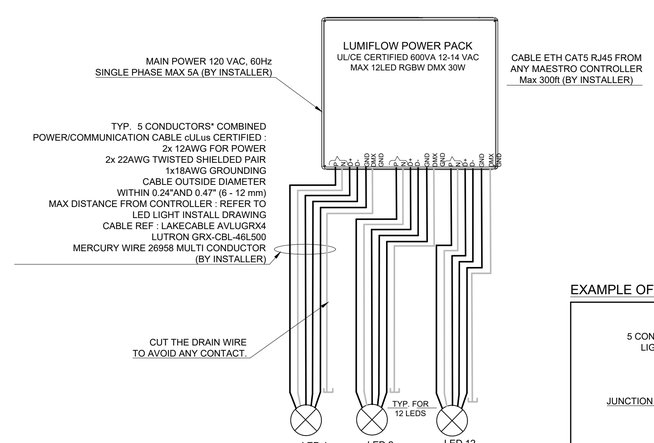

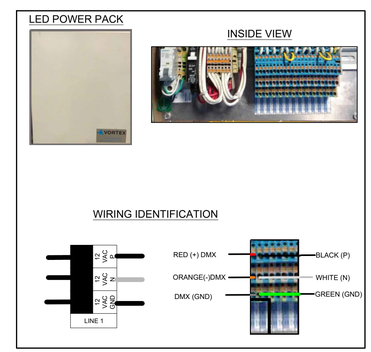

EXAMPLE OF LUMIFLOW LAYOUT

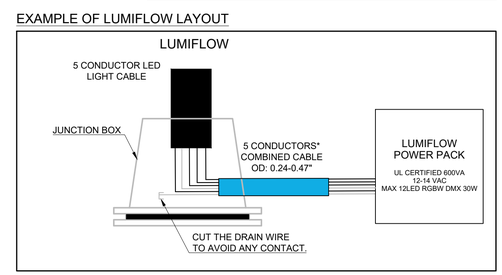

4 / ED-001 Lumiflow Power Pack UL/CE Certified
VOR- 33908.4030

VORTEX
VORTEX AQUATIC STRUCTURES INTERNATIONAL
VORTEX USA Inc.
3500 South Dupont Highway, Suite EP-101
Dover, Delaware
United States 19901
Phone: +1 (877) 586-7839

COPYRIGHT VORTEX AQUATIC STRUCTURES INTERNATIONAL-THIS DOCUMENT AND THE IDEAS, RENDERINGS AND OTHER CONTENTS CONTAINED THEREIN ARE THE SOLE PROPETY OF VORTEX AQUATIC STRUCTURES INTERNATIONAL AND MAY NOT BE DISSEMINATED, COPIED, REPRODUCED OR OTHERWISE USED WITHOUT PRIOR WRITTEN CONSENT OF VORTEX AQUATIC STRUCTURES INTERNATIONAL.

Fourth St. Community Center & Park

Project Location
Porterville,CA

Project Number
40740

Order Number
VA

Date	Revision Description	No.	By
23/Jan/2024	Issued for Permit	00	OD

Drawing Title
Electrical Details

Drawn by: MS
Verified by: MAB
Scale: N.T.S
Date: 23/Jan/2024

Page # ED-001

PLAN VIEW

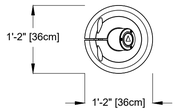

FRONT ELEVATION VIEW

SIDE ELEVATION VIEW

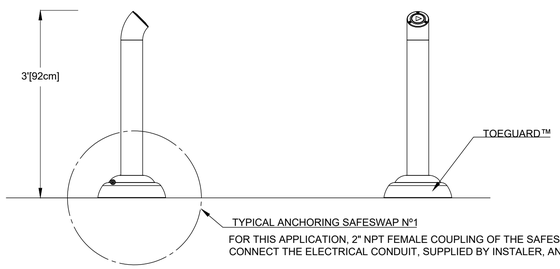

TYPICAL ANCHORING SAFESWAP Nº1

FOR THIS APPLICATION, 2" NPT FEMALE COUPLING OF THE SAFESWAP Nº1 WILL BE USED TO CONNECT THE ELECTRICAL CONDUIT, SUPPLIED BY INSTALER, AND RUN THE ELECTRICAL CABLE.

ELECTRICAL SPECIFICATION
TYPICAL 40mA AT 24V, M12-5PIN CONNECTOR CABLE, 22AWG, MAXIMUM O.D. : 0.25"
(SUPPLIED UP TO 75M WITH ACTIVATOR BY VORTEX)

1 / FT-001

Bollard Activator No. 3

VOR-0611.2XXX

VORTEX
VORTEX AQUATIC STRUCTURES INTERNATIONAL

VORTEX USA Inc.
3500 South Dupont Highway, Suite EP-101
Dover, Delaware
United States 19901
Phone: +1 (877) 586-7839

COPYRIGHT VORTEX AQUATIC STRUCTURES INTERNATIONAL-THIS DOCUMENT AND THE IDEAS, RENDERINGS AND OTHER CONTENTS CONTAINED THEREIN ARE THE SOLE PROPETY OF VORTEX AQUATIC STRUCTURES INTERNATIONAL AND MAY NOT BE DISSEMINATED, COPIED, REPRODUCED OR OTHERWISE USED WITHOUT PRIOR WRITTEN CONSENT OF VORTEX AQUATIC STRUCTURES INTERNATIONAL.

Fourth St. Community Center & Park

Project Location
Porterville,CA

Project Number
40740

Order Number
VA

Date	Revision Description	No.	By
23/Jan/2024	Issued for Permit	00	OD

Drawing Title
Feature Drawings

Drawn by	Verified by
MS	MAB

Scale	Date
N.T.S	23/Jan/2024

Page #
FT-001